This is a digital copy of a book that was preserved for generations on library shelves before it was carefully scanned by Google as part of a project to make the world's books discoverable online.

It has survived long enough for the copyright to expire and the book to enter the public domain. A public domain book is one that was never subject to copyright or whose legal copyright term has expired. Whether a book is in the public domain may vary country to country. Public domain books are our gateways to the past, representing a wealth of history, culture and knowledge that's often difficult to discover.

Marks, notations and other marginalia present in the original volume will appear in this file - a reminder of this book's long journey from the publisher to a library and finally to you.

Usage guidelines

Google is proud to partner with libraries to digitize public domain materials and make them widely accessible. Public domain books belong to the public and we are merely their custodians. Nevertheless, this work is expensive, so in order to keep providing this resource, we have taken steps to prevent abuse by commercial parties, including placing technical restrictions on automated querying.

We also ask that you:

+ *Make non-commercial use of the files* We designed Google Book Search for use by individuals, and we request that you use these files for personal, non-commercial purposes.
+ *Refrain from automated querying* Do not send automated queries of any sort to Google's system: If you are conducting research on machine translation, optical character recognition or other areas where access to a large amount of text is helpful, please contact us. We encourage the use of public domain materials for these purposes and may be able to help.
+ *Maintain attribution* The Google "watermark" you see on each file is essential for informing people about this project and helping them find additional materials through Google Book Search. Please do not remove it.
+ *Keep it legal* Whatever your use, remember that you are responsible for ensuring that what you are doing is legal. Do not assume that just because we believe a book is in the public domain for users in the United States, that the work is also in the public domain for users in other countries. Whether a book is still in copyright varies from country to country, and we can't offer guidance on whether any specific use of any specific book is allowed. Please do not assume that a book's appearance in Google Book Search means it can be used in any manner anywhere in the world. Copyright infringement liability can be quite severe.

About Google Book Search

Google's mission is to organize the world's information and to make it universally accessible and useful. Google Book Search helps readers discover the world's books while helping authors and publishers reach new audiences. You can search through the full text of this book on the web at `http://books.google.com/`

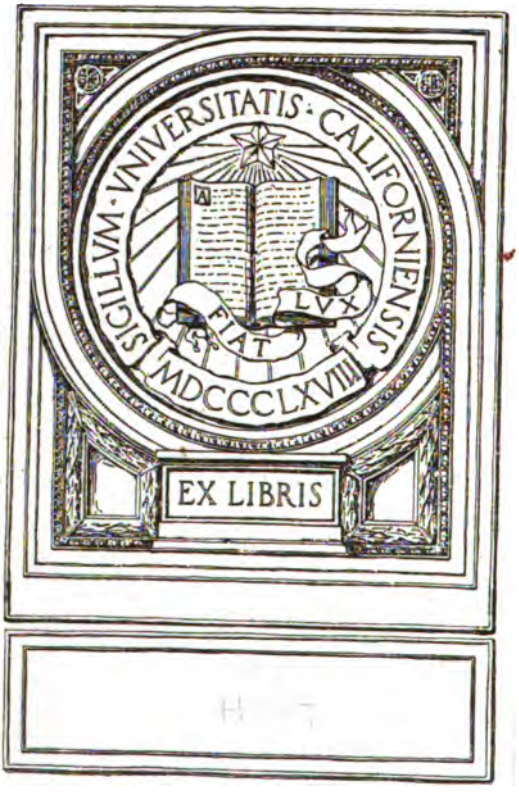
SIGILLVM · VNIVERSITATIS · CALIFORNIENSIS
FIAT LVX
MDCCCLXVIII
EX LIBRIS

The D. Van Nostrand Company
intend this book to be sold to the Public
at the advertised price, and supply it to
the Trade on terms which will not allow
of reduction.

BLEACHING AND DYEING

OF

VEGETABLE FIBROUS MATERIALS

BLEACHING AND DYEING
OF
VEGETABLE FIBROUS MATERIALS

BY

JULIUS HÜBNER, M.Sc. Tech. (Manchester), F.I.C.

Director of the Department for Bleaching, Dyeing, Printing, and Finishing, and Paper Manufacture, Municipal School of Technology, Victoria University of Manchester.

WITH AN INTRODUCTION BY

RAPHAEL MELDOLA, D.Sc., LL.D., F.R.S.

Professor of Chemistry in the Finsbury Technical College, City and Guilds of London
Past President of the Chemical Society, of the Society of Chemical Industry
and of the Society of Dyers and Colourists.

NEW YORK
D. VAN NOSTRAND CO.
TWENTY-FIVE PARK PLACE
1912

TP893
H8

UNIV. OF
CALIFORNIA

A. I. I.

PREFACE

During some twenty-five years' experience as a tinctorial chemist, first in the works and later in a School of Technology, the author has, particularly during recent years, had frequent cause to regret the lack of a manual on the Bleaching and Dyeing of the Vegetable Fibrous Materials which, whilst comprehensive and up-to-date, is sufficiently concise and obtainable at a price within reach of the student and of the younger bleacher and dyer.

The leading coal-tar colour manufacturers have issued excellent hand-books on this subject, but naturally each of these works deals only with the properties and modes of application of the products of one particular firm; a comparison of the materials supplied and the methods recommended by the different manufacturers, thus in any case necessitating the expenditure of a considerable amount of time. Such a comparison is indeed frequently impossible because fairly complete sets of these hand-books are rarely available, especially for the use of the junior employees in works.

In the present manual the author has endeavoured to describe all the practicable methods which have been proposed in connection with bleaching and dyeing, so that different methods of applying the same dyestuffs are frequently quoted. These alternative methods are intended for the intelligent consideration of the student, and it is, of course, not suggested that the dyer should lightly discard a process which he is using successfully in favour of another which is here described; a change in works' practice of this kind should never be made without the most careful study, both practical and theoretical, of the relative advantages and disadvantages of the methods concerned. At the same time it is hoped that the presentation side by side of various alternative methods may, in many cases, prove advantageous to the dyer by providing him with suggestions which he can apply to his own experience; he may thus perceive

254540

how his own processes and methods can be usefully modified, by combining different methods, or by adapting parts of other processes to his own.

A ready means of comparing the various methods in use is of particular importance in connection with the application of the modern sulphur and vat dyestuffs; the modes of applying the dyestuffs of different makers vary very considerably in these classes and success or failure often depends upon the particular method used.

In order to prevent the work from becoming unduly bulky and costly only such information as is absolutely essential is included. The author fully recognises that a thorough training in physics, chemistry and mechanics is essential to an intelligent understanding of the processes dealt with. He does not, however, consider it within the scope of this practical manual to deal with the purely scientific aspect of the matter. The chemicals and mordants actually used in practice are stated in alphabetical order with the necessary cross-references. The artificial organic dyestuffs are stated in the same way, and are classified according to their chief methods of application. In order to obviate unnecessary repetition of methods of application, numbers and letters are placed in front of the names of dyestuffs, indicating the principal method or methods by means of which each is applied and after-treated. A ready means is thus provided for ascertaining which dyestuffs of different makers can be used in combination and by the same method of dyeing.

In the section dealing with the machinery used in bleaching and dyeing, photographs of actual machines are discarded as being of little educational value; and in their place sections of the machines are given so as to show the essential working parts. A number of the diagrams illustrating this section are printed in two colours in order to secure greater clearness and intelligibility; the author is especially indebted to the publishers for accepting this expensive feature of the work.

Whenever possible the dimensions, speeds, working capacities, and the power necessary for driving the machines are given, because it is often difficult to obtain information upon these important questions.

The author wishes to express his indebtedness to Professor

Raphael Meldola, F.R.S., for his kindness in writing an Introduction to the book, to the various engineering firms, to the coal-tar colour manufacturers, and to some friends for the willingness with which they have placed information at his disposal.

He also wishes to thank Mr. W. F. A. Ermen, M.A. (Cantab.), and Mr. W. H. Pennington, F.C.S., for reading the proofs, and Mr. F. W. Bailey for his assistance in preparing the photomicrographs.

In the first issue of a work of the detailed character of the present one it is impossible to avoid slips or omissions. The author will, therefore, be indebted to his readers for pointing out any such errors, and he will endeavour to use such information in the preparation of a future edition.

J. H.

MUNICIPAL SCHOOL OF TECHNOLOGY,
VICTORIA UNIVERSITY OF MANCHESTER,
1912.

INTRODUCTION

THE branch of Technology dealt with by Mr. Hübner in the present volume may be regarded as typical of those industries which are immediately dependent for their development upon scientific and especially upon chemical research. In no subject has there been such revolution in practice as has been brought about in tinctorial art by the introduction of the coal-tar colouring matters. A state of what may in chemical language be described as *lability* has been infused into this great adjunct of the textile industries from the very beginning of Perkin's pioneering work in 1856, and has extended to the present time when fresh discoveries are constantly placing at the disposal of the dyer new materials requiring new or modified methods of application. In view of this continually swelling list of available dyestuffs, of the constant displacement of the old by newer colouring matters, and of the accompanying development of the mechanical plant necessary for their application on the large scale, no existing text-book or manual can be regarded as representing the final state of the industry. The large and more costly standard works necessarily require much time for revision, and when their latest edition appears they have already been more or less outstripped by the march of discovery.

The aim of Mr. Hübner's book is to bridge the gap between these standard and expensive works and the technical publications in which new discoveries are described ; in other words, to place in the hands of his readers a concise but comprehensive practical account of the existing state of the industry in such compact and wieldy form that it can be kept up to date without undue delay in the issue of successive editions. There can be no doubt as to the necessity for such a compilation as is now placed at the disposal of bleachers and dyers. The author's recognised expert knowledge of his subject and his long experience as a teacher are

sufficient guarantee that the industry for which he is catering will profit greatly by his labours both from the point of view of the teacher and student as well as from that of the worker in the bleach-house or the dye-shed.

There are certain aspects of the treatment of the subject adopted by the author of the present work which merit special consideration. In the first place it will be seen that the dominating idea is practicability; from cover to cover it will be found that the needs of the technologist have been kept primarily in view. To those who are familiar with the subject from the purely chemical side the result may at first sight appear startling—nay, unscientific. The classification of the colouring matters according to chemical type—unquestionably sound though it be—disappears un ler the present scheme, and compounds of the most heterogeneous types are grouped together. Of course the industry recognises, and has long recognised, such classification as the only practical one. But there is no real conflict between science and practice; it is simply a case of regarding the same subject from two different but not necessarily antagonistic points of view.

The practical dyer wants in the first place shade, and in the next place a colouring matter that can be applied to the fabric in some particular way to meet the special requirements of the case. It matters not to him whether the blue or red is a derivative of triphenylmethane, an azo-compound, an azine, a thiazine or an oxazine, so long as it gives the desired shade under the particular conditions of application necessary for the special class of fabric with which he has to deal. The classification of first importance in the industry is, therefore, according to mode of application—whether the dyestuff is basic or acid, "substantive," or "vat" and so forth. Under this scheme the practical worker knows at once where to look for a particular group, and having found the group, then the sub-classification gives him the list of available colouring matters under their various shades. Such scheme of classification is obviously as sound technically as is the classification according to chemical type sound scientifically. The kind of information which the colourist requires is no more furnished by the chemical classification than is the chemical structure indicated by the technical classification.

In view of these considerations it is unnecessary to dwell at length upon the practical advantages of the treatment which Mr. Hübner has found it necessary to adopt. It may, however, be pointed out that as one special feature of this treatment it has enabled the author to achieve within small compass what has hitherto necessitated laborious comparisons of trade catalogues and circulars and technical publications, viz., the co-ordination of methods of application in cases where several alternative methods are available. The importance of this knowledge to the practical dyer is recognised by the author in his Preface, and it cannot be too strongly emphasised.

More especially will the value of such co-ordination be realised in connection with the group of sulphur dyestuffs—a group with the remarkable history of having passed within the course of a few years from a position of comparative insignificance to one of enormous importance. Within a period of less than a decade the rapid development of these colouring matters has enabled the author to give a list of over 240 distinct compounds of various shades.

With respect to the machinery in use for bleaching and dyeing operations, the plan of giving diagrammatic sections instead of pictures must strongly commend itself to all who have occasion to use this book. Many works in other branches of technology which have come under the writer's notice have lost considerably in value through failing to adopt this plan. A figure of a complex machine, unless the student has access to a dissectable model, gives a very inadequate idea of the construction of the hidden working parts. Explanations of the working by textual descriptions of the figures without the aid of diagrammatic representation are, even with the most lucid writers, often obscure and sometimes misleading. A collection of pictures showing the various types of machines in use in some particular industry, however much the descriptions are belaboured, frequently results in the production of what might more fairly be described as a kind of elaborated illustrated trade catalogue rather than a technological work. Mr. Hübner, as will be seen from the following pages, has completely avoided this danger and, as a feature which is unique in the illustration of English works on the present subject, has made the general working particularly plain to the student by showing in red the actual course of the fabric

through the various machines. The practical value of the book is by this device considerably enhanced.

One other point suggests itself in connection with the present contribution to technological literature. In this volume, which is avowedly practical, no place is given to theoretical considerations in connection with any part of the subject. As a question of educational policy this total omission of theory may possibly be challenged. It may be well to point out therefore that the author, while strictly limiting himself to his own programme, by no means implies that scientific or theoretical treatment is to be discountenanced. He has simply omitted theory as being outside the scope of his particular treatment of the subject. In this he has certainly adopted a sound policy, for there is no more lamentable display of shallowness in the treatment of scientific subjects than is to be found in many technological works whose authors have thought it necessary to give a preliminary smattering of physics, chemistry, etc., by way of introduction to their main topic. Mr. Hübner knows the theoretical side of this industry as well as anybody, but he has not thought it necessary to deal with this aspect here.

It may perhaps be urged that from the purely practical standpoint the student undergoing training for this industry need not be troubled with theoretical notions. No sound educationalist would, however, support this contention. The introduction of theory into practice has a healthy leavening influence, and in the present case would have the effect of preventing the student from regarding this work as a mere collection of workshop recipes or practical "tips"—the very last use to which the author intends the book to be put. If the student desires—as he should be encouraged to desire—to follow the developments of theory in relation to dyeing processes his wants are catered for by other recognised publications. The present treatment of the subject is not to supersede but to superadd to the scientific treatment. It will be seen, in fact, that even at the outset, as in the chapters dealing with water and the chemicals and mordants, some knowledge of the principles of chemical science is assumed. It may be asserted as a general principle, which is unfortunately too often overlooked in this country, that the preliminary scientific education of the student of technology in those subjects bearing upon his industry cannot be too deep. The sounder the scientific

training the better the result in the direction of specialisation in the school of technology. Such a work as that by Mr. Hübner now commended to the reader will exert a beneficial influence upon the branch of industry for which it caters directly proportional to the chemical and mechanical attainments of the student who uses it.

RAPHAEL MELDOLA.

CONTENTS

PART I.—THE VEGETABLE FIBRES.

	PAGE
Cotton	1
Linen	5
Hemp	7
Chinagrass (Ramie, Rhea)	7
Jute	8
Fibres of Minor Importance	9
The Artificial Fibres (Artificial Silk)	9
Paper-Yarn	12

PART II.—WATER.

The Analysis of Water	14
Estimation of the Hardness of Water	16
Correction and Purification of Water	19

PART III.—CHEMICALS AND MORDANTS.

Chemicals and Mordants (in alphabetical order)	23

PART IV.—BLEACHING.

Preparation of the Bleaching Liquor	70
Bleaching of Loose Cotton	78
,, ,, Cotton Sliver	78
,, ,, Cops and Cheeses	78
,, ,, Cotton Yarn and Warps	79
Washing of Cotton Yarn	81
Bleaching of Cotton Piecegoods	85
Special Bleaching Processes	113
Washing of Cotton Piecegoods	118
Drying of Cotton Piecegoods	127
Bleaching of Linen	132
,, ,, Hemp	137
,, ,, Jute	137
,, ,, Chinagrass (Ramie)	139
,, ,, Artificial Silk	140

PART V.—MERCERISING.

PAGE
Introduction 141
The Practice of Mercerising 147
Mercerising of Cotton Yarn in the Hank 147
" " " Warps 150
" " " Piecegoods 150
Finishing of Mercerised Cotton 154
Reactions for the Characterisation of Mercerised Cotton . . . 154

PART VI.—MINERAL COLOURS.

Chrome Yellow 157
Chrome Orange 158
Chrome Green 159
Iron-Buff 159
Khaki 160
Prussian Blue 161
Manganese Bronze 161

PART VII.—THE NATURAL COLOURING MATTERS.

Indigo 163
Logwood 170
Fustic 176
Young Fustic 176
Quercitron Bark 177
Flavin 177
Weld 177
Turmeric 177
Persian Berries 177
Safflower 177
Red Woods 178
Madder 178
Catechu 178
Cochineal, Ammoniacal Cochineal, Lac-dye, Kermes, Orchil, Cudbear, Annatto, Orlean 180

THE ARTIFICIAL DYESTUFFS.

Abbreviations used in Parts VIII. to XIV. 182

PART VIII.—BASIC COTTON DYESTUFFS.

Yellows and Oranges 183
Reds 183
Blues and Violets 184
Greens 185

PART VIII.—BASIC COTTON DYESTUFFS—*continued.*

PAGE
Browns 186
Various 186
Application of the Basic Cotton Dyestuffs 186

PART IX.—SUBSTANTIVE COTTON DYESTUFFS.

Methods of Dyeing and After-treatment (abbreviations) 196
Yellows and Oranges 197
Reds 198
Blues and Violets 200
Greens 203
Browns 203
Blacks 205
Dyeing of Cotton with the Substantive Dyestuffs 207
Diazotising and Developing of the Substantive Dyestuffs 215
Coupling of the Direct Dyeing Cotton Dyestuffs on the Fibre with Paranitraniline 221
After-Treatment of the Substantive Cotton Dyestuffs with Metallic Salts, etc. 224
Topping of the Substantive Dyestuffs with Basic Dyestuffs 227

PART X.—SULPHUR DYESTUFFS.

Yellows and Oranges 228
Reds 228
Blues and Violets 228
Greens 229
Browns 229
Blacks 230
Dyeing of Loose Cotton 231
" " Cotton Hanks 231
" " Warps 232
" " Cops and Cheeses 233
" " Cotton Piecegoods 233
"Smothering" of the Sulphur Dyestuffs after Dyeing 235
Developing of the Sulphur Dyestuffs by Steaming 235
Topping " " " with Basic Dyestuffs 237
" Indigo with the Sulphur Dyestuffs 238
After-Treatments of the Sulphur Dyestuffs 238
Special Methods of Dyeing the Sulphur Dyestuffs 238
The Kryogene Dyestuffs 238
The Sulphur " 239
The Katigen " 242
The Immedial " 246
The Pyrogene " 253
The Sulphurol " 257
The Eclipse " 257

PART X.—SULPHUR DYESTUFFS - *continued.*

PAGE
The Cross-Dye Dyestuffs 258
The Thiophor ,, ... 261
The Thion ,, ... 262
The Pyrol ,, ... 262
The Thionol ,, ... 263
The Thiogene ,, ... 265
The Thioxine ,, ... 266
The Vidal ,, ... 267
The Thional ,, ... 268
The Auronal ,, ... 268

PART XI.—ACID AND RESORCINE DYESTUFFS.

Dyeing with the Acid and Resorcine Dyestuffs 270

PART XII.—INSOLUBLE AZO-COLOURS, PRODUCED ON THE FIBRE.

Paranitraniline Red on Cotton Yarn 275
,, ,, Piecegoods 278
Alpha-Naphthylamine Claret 281
Scarlet with Chloroanisidine 282
Dianisidine Blue 282

PART XIII.—THE VAT DYESTUFFS.

Artificial Indigo 285
The Indanthrene Dyestuffs 297
The Algole ,, ... 300
The Thio Indigo ,, ... 304
The Ciba and Cibanone ,, ... 306
The Helindone ,, ... 308
The Hydron ,, ... 309

PART XIV.—MORDANT DYESTUFFS.

Application of the Mordant Dyestuffs 311
Turkey-Red (Old Process) 312
The New Turkey-Red Process 316
New Pink 318
Alizarine Red on Piecegoods 318
Simplified Turkey Red Processes 319
Steiner's Process for Turkey-Red on Cotton Piecegoods . . . 321
Bayer's Patented Process for Dyeing Turkey-Red 322
Erban-Specht's Method of Dyeing with the Alizarines . . . 323
Dyeing of the Alizarine Dyestuffs on Chromium Mordant . . . 325
,, ,, ,, Iron Mordant 327
,, Alizarine One-Bath Colours 328
,, Cops and Cheeses with the Alizarines 328

PART XV.—COLOURS PRODUCED ON THE FIBRE BY OXIDATION.

PAGE
Aniline Black 329
Dyeing of One-Bath Black 329
Aged Black 332
Vanadium Black 335
Steam Black 337
Prud'homme Black 338
Diphenyl Black 338
Paramine Brown, Fuscamine, Bistramine Brown 339
Colours produced on the Fibre by Condensation (Nitroso Blue) . . 340

PART XVI.—DYEING MACHINERY.

Dyeing of Loose Cotton (Raw Cotton) 341
Dyeing of Cotton Yarn 345
Drying of Cotton Yarn 349
Cop Dyeing 353
Drying of Cops 362
Foam Dyeing 363
Dyeing of Cotton Warps 364
Crabbing 366
Dyeing of Cotton Piecegoods 367

PART XVII.—TESTING OF DYESTUFFS AND FIBRES.

Methods of Testing 373
Detection of Dyestuffs on the Fibre 378
Testing the Fastness of Dyestuffs 383
Examination of the Textile Fibres 385

PART XVIII.—APPENDIX.

Table of the Elements, their Symbols and Atomic Weights . . . 387
Hydrometers 388
Comparison of Thermometric Scales 391
Basis of Count Systems of Yarns 393
Engineering Calculations 395
Quantity of Heat; Combustion and Fuel 396
Steam; Weight of Materials 397
Weight of Pipes; Centrifugal Pumps; Number of Teeth in Wheels; Speed of Belt and Rope Pulleys 398
Unit of Work; Horse Power 399
Weights and Measures 399

INDEX 407

LIST OF ILLUSTRATIONS

FIG.		PAGE
1.	Cotton	2
2.	Unripe (dead) Cotton	3
3.	Cotton, Mercerised under Tension	5
4.	Bleached Linen	6
5.	Chinagrass	7
6.	Jute	8
7.	Chardonnet Silk	10
8.	Pauly Silk (*Glanzstoff*)	10
9.	,, ,, ,,	11
10.	Thiele Silk	11
11.	Viscose Silk (Courtauld Silk)	12
12.	Reisert Automatic Water Softener and Purifier	21
13.	Apparatus for Dissolving Bleaching Powder	71
14.	Stirring Arrangement for Dissolving Bleaching Powder	71
15.	Tailfer's Apparatus for the Preparation of Sodium Hypochlorite	72
16.	Electrolytic Plant for the Preparation of Sodium Hypochlorite	74
17.	,, ,, ,, ,, ,, ,,	76
18.	Side View and Section of the Oettel Electrolyser	77
19.	Haubold's Yarn Washing Machine (plan)	81
19A.	,, ,, ,, ,, (vertical section)	82
20.	Yarn Stretching and Shaking Machine	83
21.	Electrically-driven Hydroextractor	84
22.	Plate Singeing Machine	87
22A.	Automatic Traversing Motion	87
23.	Gas Singeing Machine and sketch of Burner	88
24.	Open Top Circulating Kier	89
25.	Vertical Kier (with Injector)	91
26.	Jefferson-Walker Patent Kier	92
27.	High Pressure Circulating Kier	94
28, 28A.	Mather Kier	*To face* 94
29.	Spenlé Patent Continuous Open Width Kier	*To face* 96
30.	Preparing and Batching Arrangement	98
31, 31A.	Jackson's Open Bleach Kier	99
32, 32A, 32B.	Chemic and Sour Cisterns	*To face* 102
33.	Open-width Washing, Souring and Chemicking Machine	114
34.	Washing Machine	118
35.	Rope Washing Machine (transverse section)	119
36.	,, ,, ,, (sectional elevation)	120
37.	Square Beater Washing Machine	121

FIG. PAGE
38. Open Soaper 122
39. Farmer's Patent Beater 123
40. Squeezer 124
41, 42. Scutcher 125
43, 43A. Six-Bowl Water Mangle . . . . . *To face* 126
44. Vertical Drying Machine 128
45. Horizontal Drying Machine . . . . . *To face* 128
46. Drying Cylinder Stand with Gray's Patent Spring Packing . . 129
47. Cell Dryer . . . . . *To face* 130
48. High-speed Starching and Stentering Range with Jigging Motion for Elastic Finishes . . . . . *To face* 130
49, 49A. Mather-Platt Stenter Clip 131
50. Plan of Small Bleach Works 133
51. Photo-micrograph of Bleached Sateen before and after Mercerisation under Tension 147
52. Automatic Hank Mercerising Machine 149
53, 53A. Elevation and Plan of Mercerising Range . . *To face* 152
54. Indigo Warp Dyeing Machine 167
55, 55A. Dipping Frame and Dipping Vat 168
56. Indigo Dyeing Range with Overhead Oxidising . . *To face* 168
57. Indigo Dyeing Range with Creeper Oxidising . . *To face* 168
57A. Enlarged View of one Dyeing Cistern and Accessories . *To face* 168
58. Continuous Machine for Diazotising and Developing . . . 220
59. Dye-stick and Dye-vat for Dyeing Cotton Hanks with Sulphur Dyestuffs 232
60. Special Warp Dyeing Machine for Dyeing Sulphur Blacks . . 232
61. Arrangement of Jiggers with Squeezing Rollers 234
62. Padding Jigger 236
63. Under-water Jigger . . . . . *To face* 235
64. Arrangement for Devoloping the Sulphur Dyestuffs by Steaming . 237
65. Continuous Dyeing Machine for Dyeing with the Sulphur Dyestuffs 251
66. "Bowl" for Impregnating Yarn with Beta-naphthol Solution . 275
67. Machine for Developing Para-Red on Piecegoods 279
68. Tramping Machine 314
69. High-Pressure Steaming Cottage 317
70. Complete Plant for the Production of Aged Aniline Black *To face* 336
71. Mather-Platt Ager for Steam Black . . . . . *To face* 337
72. Klauder-Weldon Raw Cotton Dyeing Machine 342
73. Rhodes Dyeing Machine 343
74. Obermaier's Loose Cotton Dyeing Machine 344
75. Klauder-Weldon Hank Dyeing Machine 347
76, 77. Elevation and Plan of Haubold's Hank Drying Machine . 350
78. Montforts' Continuous Hank Drying Machine . . *To face* 350
79. Klug's PKC Dryer 352
80, 81. Transverse and longitudinal section of Cop Box packed with Cops 355

FIG. PAGE
82. Pornitz's Cop Dyeing Machine 359
83. Patent Cop Dyeing Machine (Mather and Platt) 361
84. Foam Dyeing Apparatus 363
85. Four-Box Warp Dyeing Machine 364
86, 87. Elevation and Plan of Pornitz's Warp Dyeing Machine. . 365
88. Sixteen-cylinder Warp Drying Machine 366
89. Treble Crabbing Machine . . . . . *To face* 367
90. Lancashire Jigger 368
91, 92. Dye Beck 369
93. Three-Bowl Padding Machine 370
94. Walker's Jigger 371
95. Plan of a Bleaching, Dyeing, Mercerising and Finishing Works *To face* 372
96. Experimental Dye-Bath 378

Bleaching and Dyeing of Vegetable Fibrous Materials

PART I

THE VEGETABLE FIBRES

Cotton.

Cotton consists of ultimate white or yellowish coloured fibres which cover the seeds of the various species of the cotton plant, *Gossypium*, belonging to the natural order of Malvaceæ. There are a number of varieties of cotton plants. The following are the principal species:—

(1) *Gossypium Barbadense.*—This yields the valuable long silky-haired Sea Island cotton.

(2) *Gossypium herbaceum.*—It yields the short-stapled Egyptian, the Madras, the Surat, and some American cottons.

(3) *Gossypium Peruvianum.*—This produces the long-stapled Brazilian and Peruvian cottons.

(4) *Gossypium arboreum.*—Is a perennial tree which yields the Indian cotton (tree cotton).

The Egyptian cotton and a large portion of the cotton coming from the United States are obtained from *Gossypium hirsutum*, a variety of *Gossypium Barbadense.*

The length of the cotton fibre is 15—50 mm., the width 0·01—0·04 mm. It is a simple, ribbon-like fibre, tapering and closed at one end, whilst the other end by which it was attached to the seed is much wider and irregularly torn. It is opaque, always more or less spirally twisted, with thickened side walls

and irregular markings on the surface. The fully developed or ripe cotton fibre (Fig. 1) is tubular; during the process of ripening the tube collapses, and at the same time the fibre becomes spirally twisted; this is clearly shown in the irregular, generally oval sections. The canal frequently contains granules.

Unripe cotton fibres, known as "dead cotton" (Fig. 2), are also ribbon-like, but much wider than ripe cotton, more transparent, flatter in appearance, and irregularly folded. They possess no central canal and exhibit little affinity for colouring matters. They may be seen in dyed pieces as white specks.

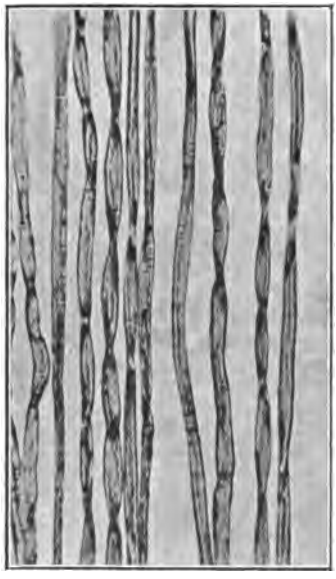

FIG. 1.—Cotton (× 100 diam.).

The cotton fibre consists of nearly pure *cellulose*. It contains about 5 per cent. of impurities, consisting of colouring matter, pectic substances, cotton wax, cotton oil, albuminous matter, and ash.

Cellulose.—Cellulose is a *carbohydrate*, having the empirical composition $C_6H_{10}O_5$. It always contains in the air-dry condition a certain amount of water (hygroscopic moisture), which varies from 6 to 10 per cent.

Cellulose is insoluble in water, but A. Scheurer found that the fibre is considerably weakened when heated with water under pressure to 150° C. Steaming for a prolonged period also attacks the cellulose.

The chief solvents for cellulose are concentrated solutions of zinc chloride and ammoniacal cupric oxide (Schweizer's reagent). The latter solution is very largely employed in the manufacture of artificial silk (Pauly, Bronnert, and Thiele silk). In the water- and rot-proofing of canvas and paper (Willesden goods) the material is passed through a solution of ammoniacal cupric oxide.

Concentrated sulphuric acid exerts a "hydrating" action on

cellulose similar to that of mercerising, but ultimately the fibres are converted into a gelatinous mass (amyloid), which on precipitation with water yields amorphous ("hydrated") cellulose. Bernard Ermen patented a machine for treating cotton yarn with sulphuric acid. The result is the production of a stiff and somewhat smooth product not unlike horse-hair.

Knecht[1] found that concentrated nitric acid exerts a mercerising action, that cotton treated with strong nitric acid and washed under tension acquires a lustre and that it exhibits a greater affinity for the substantive cotton dyestuffs.

FIG. 2.—Unripe (dead) Cotton (× 100 diam.).

Cotton treated with mixtures of strong nitric and sulphuric acid is converted into highly explosive *cellulose nitrates* (nitro celluloses), *i.e., gun-cotton, pyroxylin, collodion-wool.* Solutions of these nitrates are largely employed in the manufacture of artificial silk (Chardonnet silk). It has also been suggested to employ these solutions for the coating of cotton fabrics in order to make certain finishes, such as the Schreiner finish, more permanent.

Weak mineral acids have practically no effect on cotton, but if cotton impregnated with the acid is dried it becomes "tendered." At ordinary temperatures this tendering may only become marked after a considerable length of time, whilst when dried at high temperatures the fibre is rapidly destroyed, due to the formation of *hydrocellulose.* Salts which are liable to dissociate, such as the chlorides of magnesium, aluminium, etc., may produce the same effect (see under "Bleaching"). Scheurer has shown that oxalic acid, citric acid, and tartaric acid in dilute solutions do not attack cellulose appreciably, but when dried and subsequently steamed the fibre is tendered.

[1] *Journ. Soc. Dyers and Colourists*, XII., p. 89, 1896.

Knecht has shown that oxalic acid, when dried on cotton fabrics, is capable of forming *formylcellulose.*

Cross, Bevan, and Traquair state that formic and acetic acid, except when in the pure state, do not affect the strength of the cotton fibre. A number of patents have been taken out for the manufacture of *acetylcelluloses*, some of which are soluble in alcohol, others in acetone. Small quantities of an artificial silk (Acetate silk) made from these products have been brought into the market.

Cross, Bevan, and Beadle discovered that cellulose which has been treated with strong caustic soda lye, if afterwards squeezed and treated with carbon bisulphide, forms a soluble compound, *Viscose* (cellulose xanthate). The compound is soluble in water, from which solution, by the addition of acids, common salt, alcohol, zinc, or magnesium sulphate, a "hydrated" cellulose is precipitated. Viscose is now very largely used in the manufacture of an artificial silk (Viscose silk, Courtauld silk). It may also be employed in the sizing of cotton goods, in calico printing for fixing pigment colours, in the sizing of papers, in the manufacture of book cloth and wall papers.

Powerful oxidising agents convert cellulose into *oxycellulose.* The action is frequently accompanied by tendering of the cotton fibre. Oxycellulose may be formed in bleaching with the hypochlorites, especially when strong solutions are used and when some parts of the material are exposed to the action of the air, after impregnation with the bleaching liquor.

Cotton may also be converted into oxycellulose and tendered during boiling with caustic soda or lime, especially when parts of the goods are allowed to become dried. W. Thomson, Higgins, Briggs, and others have shown that cotton and linen may become tendered during bleaching by reason of the presence on the fibres of finely-divided copper or brass from the lubricating oil. Lead peroxide, formed by the action of hypochlorites on metallic lead, sometimes gives rise to very serious tendering if the cotton contaminated with lead is subjected to a further alkaline boil.

Oxycellulose exhibits a greater affinity than ordinary cellulose for the basic dyestuffs, such as Methylene Blue, but less affinity for the substantive cotton dyestuffs, such as Erika, etc. The property of dyeing deeper shades than cellulose with Methylene Blue may be used for detecting the presence of oxycellulose on

the fibres. Very minute quantities of oxycellulose may be detected by boiling the fibres with Fehling's solution, this being reduced and cuprous oxide precipitated on the fibres.

The Action of Alkalies on Cellulose.—Cellulose may be boiled in solutions of alkaline carbonates without any appreciable effect.

Boiling of cotton with caustic lime or caustic soda solutions at the strengths usually employed in the kiers does not appreciably affect the cotton fibre, providing that air is excluded and that the material is not allowed to become dry during the boiling operation. When the boiling lye is discharged from the kier, water must be run in as quickly as possible in order to prevent the cotton from becoming dried and tendered. The action of caustic soda lye and other agents which produce a similar effect on cotton will be more fully described under "Mercerising," p. 141. Fig. 3 is a photo-micrograph of cotton fibres which have been mercerised under tension.

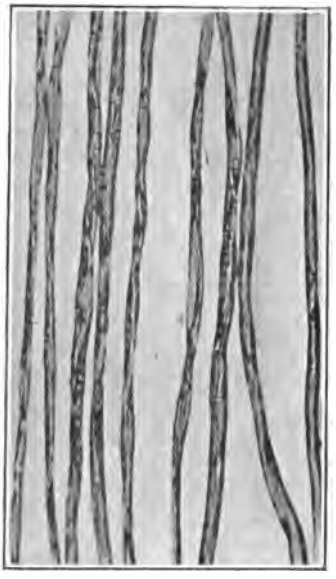

FIG. 3.—Cotton, mercerised under tension (× 100 diam.).

LINEN.

Linen is the bast fibre derived from the flax plant, *Linum usitatissimum.* The fibre is separated from the woody portion of the plant by the *retting* (fermentation of the pectose) and by several mechanical operations, such as the *breaking*, *scutching* and *heckling*.

The retting is accomplished either by steeping the flax in stagnant water, by steeping in running water, by prolonged exposure of the flax in a moist state in the fields (the so-called "dew retting"), or, finally, by employing artificial means, such as a boiling weak solution of sulphuric acid.

According to *A Manual of Dyeing* (Knecht, Rawson and

Loewenthal), p. 42, the quality and the chemical composition of the flax vary considerably according to the process used in retting. Thus a flax retted by the Belgian process (steeping in running water) contained 82·5 per cent. of cellulose, and 7·6 per cent. of sugar; while one obtained by retting in warm water was found to contain 88 to 89 per cent. of cellulose, and only 1 to 2 per cent. of sugar.

Viewed under the microscope, the linen fibre is transparent, nearly round, tapering at each end. The cell walls are thick and the central canal, the sides of which are parallel, is very narrow, sometimes only visible as a black line. The fibre frequently exhibits bulb-like widenings and distinct cross markings, appearing not unlike bamboo cane (Fig. 4). Its length is 20—35 mm., and the width 0·015—0·025 mm. The linen fibre is stronger, more pliable, and less elastic than the cotton fibre. It is also more lustrous and a better conductor of heat.

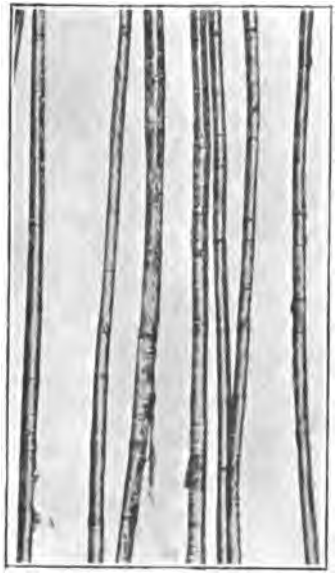

FIG. 4.—Bleached Linen (× 100 diam.).

The raw flax fibre contains a much larger proportion of impurities, consisting chiefly of pectic matters, than the cotton fibre, but the pure fibre, like cotton, consists of cellulose.

The behaviour of linen towards chemical reagents is similar to that of cotton, but mercerising has no marked effect, especially as regards the lustre of the fibre.

Towards colouring matters linen behaves like cotton, but, generally speaking, it is not as readily penetrated by dyestuffs. Boiling with soda ash with the addition of soap or Turkey-red oil is to be recommended.

The tannin bath, when mordanting for the basic dyestuffs, should be hot, and the fibres will be more readily penetrated if a small quantity of Turkey-red oil is added. The addition of Turkey-red oil will also be found an advantage when dyeing with

the substantive and the sulphur dyestuffs; the quantity of salt or Glauber's salt added should be reduced, whilst that of soda and of sodium sulphide, when dyeing with the sulphur dyestuffs, should be proportionately increased.

In order to obtain thorough penetration, when dyeing heavy linen piece goods in the indigo vat, it is best to use the "dipping frame."

Thorough washing after dyeing, and especially after souring, is of the greatest importance.

Hemp.

Hemp, like linen, is a bast fibre. It is obtained from the hemp plant, *Cannabis sativa*. Hemp very closely resembles linen. Its microscopic appearance is also similar to that of linen, but the fibres are somewhat thicker and coarser. It is seldom bleached and dyed. Towards colouring matters and chemical agents it behaves like linen.

Chinagrass (Ramie, Rhea).

The Chinagrass is obtained from the bast of a nettle, the *Boehmeria nivea*. The length of the fibre is 120—200 mm., the diameter 0·04—0·08 mm.

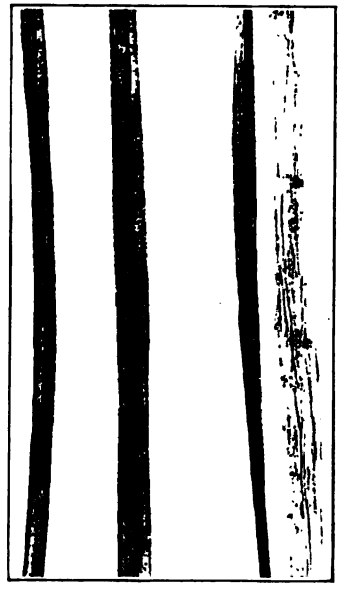

Fig. 5.—Chinagrass (× 100 diam.).

Microscopic Characteristics.—The fibre is smooth, cylindrical, sometimes more or less flattened and striated (Fig. 5). The canal is wide, and the ends of the fibres are rounded or lance-shaped.

It possesses a silk-like gloss, which is, however, affected by bleaching and dyeing. In order to preserve the lustre and the soft feel after bleaching, the material is, if possible, finally soaped or treated with a very weak solution of glycerine.

Chinagrass, in its behaviour towards colouring matters, very closely resembles cotton. The basic dyestuffs on tannin mordant,

and the substantive dyestuffs, may be dyed on Chinagrass without affecting its lustre. The Alizarines, in the dyeing of which Turkey-red oil is used as a mordant, catechu brown, indigo, and logwood black, the mineral colouring matters, such as chrome yellow and iron-buff, are not used in dyeing Chinagrass, because they destroy the natural lustre and the softness of the fibres.

Jute.

The jute fibre is chiefly obtained from *Corchorus capsularis.* It is prepared by a short process of retting. The raw jute fibre consists of fibre bundles, the length of which vary from 1 to 2½ yards, whilst the ultimate fibres vary in length from 1·0—4·2 mm.

Fig. 6.—Jute (× 100 diam.).

The microscopic characteristics of jute (Fig. 6) somewhat resemble those of the linen fibre, but the central canal in a single fibre varies considerably in width.

The jute fibre is highly lignified and it, therefore, gives the characteristic reactions of all the lignified tissues, *i.e.*, it is coloured orange by a solution of alpha-naphthylamine hydrochloride, yellow by a solution of aniline sulphate, and red by phloroglucinol.

According to Cross and Bevan, jute consists of a chemical combination of *bastose* and *cellulose.* Jute readily absorbs bromine and iodine. If treated with chlorine water, or chlorine gas, the fibre is chlorinated, and if afterwards treated with sodium sulphite, is coloured a beautiful red. By boiling the chlorinated jute with sodium sulphite, the fibre becomes disintegrated, and if the treatment of chlorination and boiling with sulphite is repeated several times, the ultimate jute fibres will be obtained.

According to Appleyard, *A Manual of Dyeing*, p. 44, both

bleached and unbleached jute yarn loses weight when boiled in water, and, at the same time, shrinkage and slight tendering are noticed. Boiling dilute solutions of sulphuric acid also attack jute.

The Dyeing of Jute.—Jute is very readily dyed with the basic and with a number of acid dyestuffs, such as Orange II, Ponceau 4GB, Double Scarlet, etc.

Basic dyestuffs should be dyed with the addition of alum. Enter the material into the cold dye-bath and then heat gradually to the boil. When brilliant shades are required the dye-bath should not be heated above 200° F.

The acid dyestuffs are also dyed with the addition of alum.

The Eosines, the Rhodamines and the Brilliant Croceïnes are dyed with the addition of 5 to 7 lbs. of common salt per 10 gallons of dye-liquor.

The substantive and the sulphur dyestuffs are less frequently employed in jute dyeing. The methods are the same as employed in cotton dyeing.

Fibres of Minor Importance.

Manila hemp, Sisal, Sunn hemp, New Zealand flax, Piassava, cocoa fibre, etc., are only rarely dyed.

Generally speaking, the methods given for dyeing jute and linen may be employed.

The Artificial Fibres.

Artificial Silk and Horse-hair.—The first artificial silk was made by M. de Chardonnet, by forcing a solution of nitrocellulose in alcohol and ether, through capillary tubes into water. Coagulation immediately takes place and a thin, very lustrous fibre is formed. The product is finally denitrated by steeping in a solution of ammonium sulphide. This type of artificial silk is known as *Chardonnet, Besançon, Meteor, Lehner,* or *Frankfurt* silk.

Under the microscope the fibre appears smooth, round, with peculiarly characteristic twisting or folding (see Fig. 7), not noticeable in the other artificial silks.

Nitrocellulose Silk (*Chardonnet Silk*) can be dyed, even in heavy shades, with the basic dyestuffs, without the application of

tannin mordants. It differs in this respect from all the other artificial silks.

The substantive and the sulphur dyestuffs are dyed on artificial silk with the usual additions. The Hoechster Farbwerke especially recommend the Janus dyestuffs; on Chardonnet silk these produce shades, fast to water, without previous mordanting with tannins.

Pauly Silk, Glanzstoff, Elberfeld Silk, Bronnert Silk, Sirius.

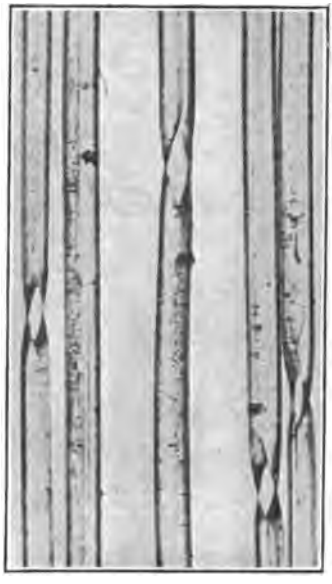

FIG. 7.—Chardonnet Silk (× 100 diam.).

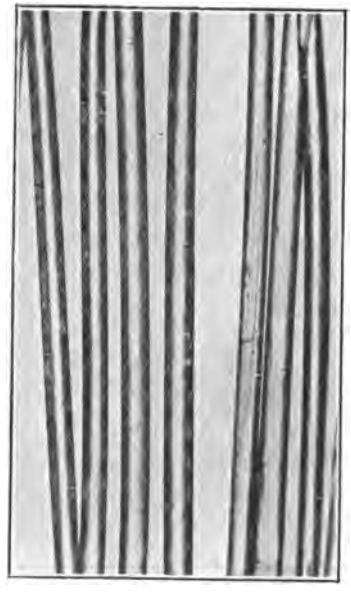

FIG. 8.—Pauly Silk (*Glanzstoff*) (× 100 diam.).

—These products are obtained by forcing solutions of cotton or mercerised cotton in ammoniacal cupric oxide (Schweizer's reagent) through fine orifices into a coagulating bath. The threads are finally freed from copper and dried under tension. The appearance of the fibres under the microscope (see Fig. 8) is cylindrical, very smooth and straight, whilst other fibres (see Fig. 9) exhibit impressions which are probably due to one fibre having been pressed upon another whilst still in a soft state, probably during drying under tension.

Thiele Silk.—The Thiele silk is also spun from solutions of cotton in ammoniacal cupric oxide, but in this method more highly concentrated solutions are employed. The orifices through which the cellulose solution is forced are much wider than those used in the other processes, and the filaments are drawn out in the coagulating bath. Filaments much smaller in diameter are thus produced (see Fig. 10).

By means of this method of spinning it has become possible to

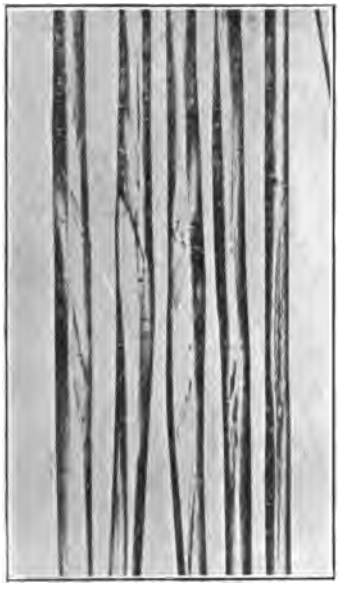

FIG. 9.—Pauly Silk (*Glanzstoff*) (× 100 diam.).

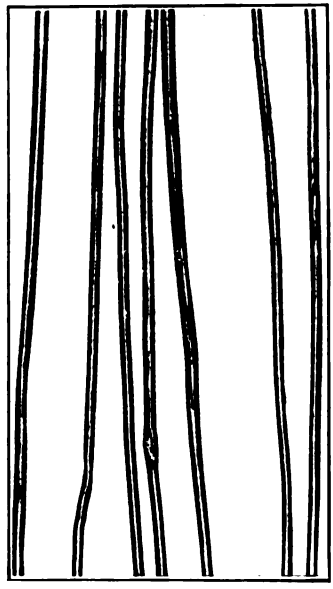

FIG. 10.—Thiele Silk (× 100 diam.).

produce very fine threads which much resemble natural silk. Counts as low as 30 deniers can be spun. The Thiele silk differs from the other artificial silks in that each thread is composed of from 45 to 60 and more filaments, whilst the latter and also the *Viscose* silk, usually contain from 12 to 15 filaments.

Viscose Silk (*Courtauld Silk*).—In Stearn's process, a solution of cellulose (chemical woodpulp), *viscose*, is forced through orifices into a coagulating bath of ammonium chloride. The

cellulose xanthate is finally decomposed by treatment in an acid bath. The fibres (Fig. 11) are smooth but show distinctly twisting or folding, not unlike the appearance of cotton fibres which have been mercerised under tension. The fibre also seems to appear more oval in shape than *Glanzstoff*.

The affinity of *Glanzstoff*, *Thiele Silk* and *Viscose Silk* for basic dyestuffs is much less than that of the *Chardonnet Silk*. It is, therefore, necessary to apply tannin mordants previous to dyeing with these dyestuffs. Towards substantive and sulphur dyestuffs they behave like mercerised cotton. The affinity of the *Thiele Silk* for these dyestuffs, however, resembles much more that of ordinary cotton.

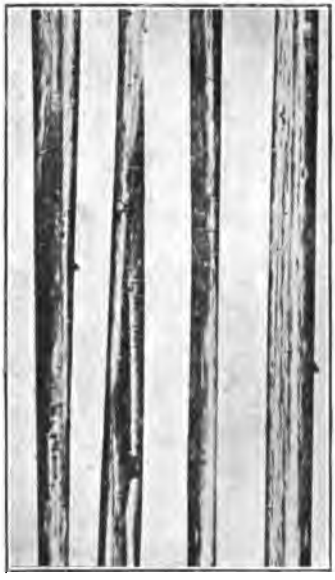

FIG. 11.—Viscose Silk (Courtauld Silk) (× 100 diam.).

Acetate Silk.—Acetate silk, of which, so far. only small quantities have been produced, is obtained from solutions of acetylcellulose.

PAPER-YARN.

Paper-yarn is known in commerce under different names, such as *Silvalin*, *Xylolin*, *Licella*, *Artificial Jute*, etc. It may be made from paper-pulp of varying composition, but wood-cellulose forms the chief raw material.

Special paper machines, on which the paper is made in very narrow strips, which are afterwards twisted into threads, are used in the manufacture of paper-yarn.

The dyeing may either be done in the Hollander, *i.e.*, in the pulp, before the paper is made, or in the cop in special cop-dyeing machines, or the pieces may be dyed in the jigger.

The methods of dyeing are the same as given for cotton, linen and jute.

PART II

WATER

A GOOD supply of pure water is of the greatest importance to the bleacher and the dyer. The natural impurities which a water contains are either suspended or dissolved in the water. The former usually give little trouble and can be readily removed, whilst the latter may be more or less difficult to deal with. If it be desirable to ascertain if a particular water is suitable for bleaching or dyeing, the fact that a clear water is not necessarily a pure, or suitable, water, must be borne in mind.

A water which has passed through soils, or through or over rocks which are very hard and insoluble, is usually free from dissolved impurities and is termed a "soft" water. If a water, however, passes over limestone, magnesian limestone, chalk, etc., it will always contain more or less of these impurities, it will become a calcareous or "hard" water.

On the addition of soap, hard water produces precipitates of insoluble lime and magnesia soaps, and, therefore, causes a considerable loss of soap.

Rosin soaps are particularly objectionable in this respect, as they slowly turn brown, owing to oxidation.

Such precipitates are, however, not formed if Monopole Soap (see "Soap," p. 52), is used.

The lime and magnesia soaps are of a sticky nature, and they adhere to the fibres and frequently injure the shade. Hard waters are, therefore, as a rule, less suited for bleaching and dyeing than soft waters. The carbonates of lime and magnesia precipitate iron and aluminium mordants as well as some of the basic, the mordant and the substantive cotton dyestuffs.

A water containing iron is quite unsuitable for bleaching purposes, because it may cause the so-called "iron-stains." When such a water is used in dyeing the Alizarines, or the basic cotton dyestuff on tannin mordants, duller shades will be the result.

The hardness of a water is either "temporary," *i.e.*, due to

calcium or magnesium carbonate, or it is "permanent," *i.e.*, chiefly due to calcium or magnesium sulphate and chlorides.

The following natural waters come into consideration for bleaching and dyeing:—*Rain water, spring and well water, and river water.*

Rain Water.—Rain water is the purest natural water. It usually contains ammonia, oxygen and nitrogen, carbonic and nitric acids, and very small quantities of saline matter and of organic substances.

Rain water which has been collected in towns with large industries frequently contains also a small quantity of sulphuric acid and soluble tarry matters.

For bleaching and dyeing rain water is very suitable.

Spring and Well Water.—These waters usually contain certain quantities of dissolved mineral matter, such as the carbonates or bicarbonates, sulphates, nitrates, chlorides and silicates of calcium, magnesium, sodium, potassium, aluminium and iron, and sometimes also organic matter.

River Water.—River water frequently contains a considerable quantity of suspended matter, but usually it contains less dissolved mineral matter than spring and well water, because some of the latter becomes deposited in the bed of the river. Water from moorland frequently contains a considerable amount of organic matter in suspension and peaty acid in solution. The characteristic brownish colour of such water is due to the presence of peaty acid.

The Analysis of Water.

The question as to whether a water is suitable for bleaching or for the dyeing of certain colours can often be ascertained by a few simple tests. In special cases it may, however, be found necessary to obtain a complete qualitative and quantitative analysis of a water.

The following simple tests will in many cases give sufficient indication to the practical bleacher and dyer as to whether a water is suitable for his requirements:—

Free Acid.—Add a few drops of a neutral solution of lackmoïd. If it turns red the water contains free acid.

Free Alkali (usually alkaline carbonates).—Boil the water for a

short time, filter, and add phenolphthaleïn, which turns red in the presence of free alkali.

Organic Matter.—If large quantities are present the water is usually of a brownish colour. Evaporate the water to dryness and heat the residue; if organic matter is present, the residue will become brown and ultimately black.

Lime or Calcium Salts.—Add ammonium chloride and a few drops of ammonium oxalate to the water. A white precipitate indicates the presence of calcium or lime salts.

Magnesium Salts.—Boil after the lime has been precipitated with ammonium oxalate and ammonium chloride, filter, and evaporate the filtrate to about one-tenth of its bulk; cool, add a small qualtity of ammonia and sodium phosphate. If magnesium is present a crystalline precipitate will be formed.

Chlorides.—Add a few drops of pure nitric acid, and then silver nitrate solution. The formation of a white curdy precipitate indicates the presence of chlorides.

Sulphates.—Add a few drops of hydrochloric acid and barium chloride solution. Sulphates will give a white precipitate.

Free Carbonic Acid and Bicarbonates.—A white precipitate will be formed if clear lime water is added. If the bicarbonates present are those of iron, lime, or magnesia, a precipitate is also formed when the water is boiled.

Alkaline Carbonates.—Boil the water for a short time, filter and add phenolphthaleïn, which turns red if alkaline carbonates are present.

Iron.—Evaporate the water nearly to dryness, add hydrochloric acid and a few drops of nitric acid, and then either potassium thiocyanate or potassium ferrocyanide. The former will give a red colouration, the latter a blue precipitate, if iron is present in the water. Very convenient and rapid methods for the quantitative estimation of iron in water by means of thiocyanate have been suggested by Lunge and v. Kéler, *Zeitschrift für angewandte Chemie*, 1896, p. 3, and by Seyda, *Chemiker Zeitung*, 1898, p. 1086. A quantity of the water is evaporated, the residue dissolved in pure nitric acid, and diluted with distilled water. Ammonium thiocyanate solution is added, and the solution is shaken with a measured quantity of ether. The red colouration is absorbed by the ether, the colour of which is then compared with standard colourations produced by using solutions

containing known quantities of iron. A special apparatus which may be conveniently used has been suggested by Dr. Klemm and built by Louis Schopper, of Leipzig. It consists of 20 bottles containing standard colour solutions of varying depths, each of which corresponds to a certain quantity of iron.

Estimation of the Hardness of Water.

Hehner's method for determining the hardness of water is carried out in the following manner:—

I. *Temporary Hardness (calcium or magnesium carbonate).*—A $\frac{1}{50}$ normal solution of sulphuric acid is prepared by diluting 20 c.c. of normal acid to 1,000 c.c. with water. To 100 c.c. of the water to be examined a few drops of Methyl Orange are added. This is titrated with the $N/50$ acid until the orange colour changes to red. 1 c.c. of acid is equal to 0·001 grm. $CaCO_3$, or its equivalent of $MgCO_3$, and 1 c.c., therefore, also represents 1 part of $CaCO_3$ (or its equivalent of $MgCO_3$) per 100,000 parts of water. In some cases it may be preferable to use $N/10$ acid and alkali respectively, and to titrate 500 c.c. of water in place of 100 c.c. The method is not reliable if the water contains other carbonates (*i.e.*, ammonium carbonate), the results obtained being too high. Such a case was pointed out to the author. The water examined was taken from a brook into which water from a colliery was being pumped.

II. *Permanent Hardness (chiefly calcium or magnesium sulphate).*—A $\frac{1}{50}$ normal solution of sodium carbonate is prepared by diluting 20 c.c. of the normal solution to 1,000 c.c. with water. 100 c.c. of the water to be tested are transferred to a platinum basin. A measured volume of the $N/50$ sodium carbonate solution, largely in excess of that required, is added. The platinum basin is now transferred to a water bath, and the solution is evaporated to dryness. Care must, however, be taken not to overheat the residue, or some of the carbonates precipitated may be converted into oxides, and thus too high a result obtained. The residue is dissolved in hot water and filtered. The basin and the filter should be thoroughly washed. The filtrate containing the sodium carbonate is now titrated with $N/50$ sulphuric acid. This gives the excess of sodium carbonate added. If this is deducted from the total number of c.c. of sodium carbonate

added, we obtain the number of c.c. used in removing the permanent hardness. 1 c.c. = 0·001 grm. of $CaCO_3$ (formed from the sulphate) precipitated from 100 c.c. of water, and 1 c.c., therefore, also represents 1 part per 100,000 parts of water. We obtain the total hardness of the water by adding the permanent hardness to the temporary hardness.

Wanklyn's Method for Determining the Hardness of Water.

In this method the calcium and magnesium salts present in the water are precipitated by means of a soap solution. The degrees of hardness of a water, according to Wanklyn, are equal to grains of calcium carbonate per gallon, plus one.

Preparation of the Standard Soap Solution.—10 grms. of pure white Castile soap are dissolved in 600 c.c. of alcohol (90 per cent.), and made up with distilled water to 1,000 c.c.

Standardising of the Soap Solution.—1·11 grms. of pure anhydrous calcium chloride is dissolved in 1,000 c.c. of water, or 1 grm. of pure calcium carbonate is dissolved in an excess of hydrochloric acid. This solution is evaporated on the water bath to dryness, the residue is dissolved in water, evaporated to dryness, and dissolved in 1,000 c.c. of distilled water. 10 c.c. of this solution are transferred to a stoppered bottle of about 250 c.c. capacity. The soap solution is then added from a burette, 1 c.c. at a time, and the bottle well shaken after each addition. When the lather becomes somewhat more permanent smaller quantities of soap solution are added each time. This is continued until the lather remains permanent for five minutes, whilst the bottle is laid upon its side.

Exactly 11 c.c. of the soap solution should be required to produce the permanent lather. If the soap solution is found to be too strong it should be diluted with equal volumes of alcohol and water to the correct strength.

To ascertain the *total hardness* of a water 70 c.c. are titrated with the soap solution as above. The number of c.c. minus one equals grains of $CaCO_3$ per gallon, because 1 c.c. of the soap solution is required to give a permanent lather with 70 c.c. of distilled water.

If a water requires more than 16 c.c. of the soap solution, or if a large quantity of magnesia is present and it requires more

than 7 c.c., a smaller quantity of water should be taken and the difference made up to 70 c.c. with distilled water.

Determination of Permanent Hardness.—Boil 500 c.c. of the water for about 30 minutes, in order to precipitate the salts which cause the temporary hardness, and fill up to the mark with recently-boiled distilled water.

The water is then filtered and 70 c.c. are titrated with the soap solution as above. The difference between the permanent hardness and the total hardness gives the temporary hardness.

COMPARISON OF GERMAN, ENGLISH AND FRENCH DEGREES OF HARDNESS.

German.	English.	French.	German.	English.	French.
0·5	0·62	0·9	5·6	7·0	10·0
0·56	0·7	1·0	6·0	7·5	10·74
0·7	0·87	1·26	6·5	8·13	11·64
0·8	1·0	1·43	6·7	8·38	12·0
1·0	1·25	1·79	7·0	8·75	12·55
1·12	1·41	2·0	7·28	9·10	13·43
1·5	1·88	2·69	7·84	9·8	14·0
1·68	2·10	3·0	8·0	10·0	14·30
2·0	2·5	3·58	8·4	10·5	15·0
2·24	2·8	4·0	8·5	10·63	15·18
2·4	3·0	4·3	8·8	11·0	15·75
2·5	3·13	4·48	8·96	11·20	16·0
2·8	3·5	5·0	9·0	11·25	16·08
3·0	3·75	5·37	9·5	11·88	17·0
3·2	4·0	5·73	10·0	12·50	17·9
3·36	4·2	6·0	10·08	12·60	18·0
3·5	4·38	6·27	10·4	13·0	18·6
3·92	4·9	7·0	10·5	13·13	18·78
4·0	5·0	7·17	10·64	13·3	19·0
4·48	5·60	8·0	11·0	13·75	19·68
4·5	5·63	8·06	11·2	14·0	20·0
4·8	6·0	8·60	11·5	14·07	20·59
5·0	6·25	8·95	11·76	14·38	21·0
5·04	6·30	9·0	12·0	15·0	21·5
5·5	6·88	9·85			

Degrees of Hardness :—

1° English = 1 grain of $CaCO_3$ in 1 gallon of water.
1° French = 1 part „ $CaCO_3$ „ 100,000 parts of water.
1° German = 1 „ „ CaO „ „ „ „

1° English = 0·8° German = 1·43° French.
1° French = 0·7° English = 0·56° German.
1° German = 1·25° English = 1·79° French.

Correction and Purification of Water.

Water which contains earthy and alkaline carbonates but which does not contain iron, may be corrected by the addition of either sulphuric or acetic acid, preferably the latter. The quantity of acetic acid required to correct a hard water, is ascertained in the following manner: Pour 1 litre of the water into a white basin and add a few drops of Methyl Orange solution. Then add from a burette, whilst continuously stirring, $\frac{1}{10}$ normal hydrochloric acid (10 c.c. of hydrochloric acid, 34·2° Tw. per litre water), until the colour change takes place. Each c.c. of the acid used indicates that the addition of 2 ozs. of acetic acid, 8·8° Tw., or 1·3 ozs. of acetic acid, 12° Tw. will be required to correct 625 gallons of water.

Mechanical Purification.

Mechanical purification is only effective if the water contains suspended organic or inorganic matter, or iron salts (ferrous carbonate). Ferrous carbonate is converted into ferric hydrate if the water is exposed to the air in large shallow tanks. Both the ferric hydrate and the suspended matter settle out and may be removed by passing the water through filters composed of sand or cinders.

Chemical Purification.

In order to remove the *temporary hardness*, the water may be boiled. This method is, however, as a rule, too costly. The hardness may also be removed by boiling the water for a short time with the addition of soap. The insoluble lime-soaps are allowed to rise and are then removed. The method may be used to advantage when dyeing some of the substantive cotton dyestuffs. It is, however, costly, and does not always give satisfactory results.

Bicarbonate of lime and of magnesia are removed by adding calcium hydrate or sodium hydrate to the water.

$$CaO\ (CO_2)_2 + CaO = 2\ CaCO_3.$$
$$MgO\ (CO_2)_2 + CaO = MgCO_3 + CaCO_3.$$

The permanent hardness, due to calcium sulphate and chloride may be removed by adding sodium carbonate.

$$CaSO_4 + Na_2CO_3 = CaCO_3 + Na_2SO_4.$$

Soluble magnesium salts are, however, best removed by lime, because magnesium hydrate is less soluble than magnesium carbonate.

When sodium hydrate is employed in order to remove the temporary hardness, sodium carbonate is formed, which then in turn acts on the permanent hardness (calcium sulphate).

$$CaO\ (CO_2)_2 + 2\ NaOH = CaCO_3 + Na_2CO_3 + H_2O.$$

The temporary hardness is, in many instances, much greater than the permanent hardness. The addition of lime and of sodium carbonate is to be recommended in such cases. If, however, the temporary and the permanent hardness of a water are about the same, caustic soda should be used.

In the *Porter-Clark* machine, one of the earliest used for water softening and purification, the water after having been mixed with the necessary reagents is passed through cotton-cloth filters.

The use of filter-presses for filtering the water has been suggested by A. L. G. Dehne.

A very simple and effective apparatus is the one invented by Archbutt and Deeley. The water, after having been mixed with the reagents, is run into tanks containing the mud from previous operations. Perforated pipes, through which steam and air is blown into the water, are laid immediately above the bottom of these tanks. The particles of mud are thus thoroughly mixed with the water and the fine, freshly formed precipitate is rapidly carried down by the coarser particles. The precipitate settles so quickly that, after the air-current is stopped, the water becomes perfectly clear in from 30 minutes to 1 hour.

The *Reisert Automatic Water Softener and Purifier* of Royles

Limited, Irlam.—Lime and sodium carbonate are used in the particular type of Reisert plant described here.

A clear, saturated solution of lime is employed in preference to milk of lime used in other types of water softeners. Fig. 12 gives an illustration of a plant capable of treating 1,000 gallons

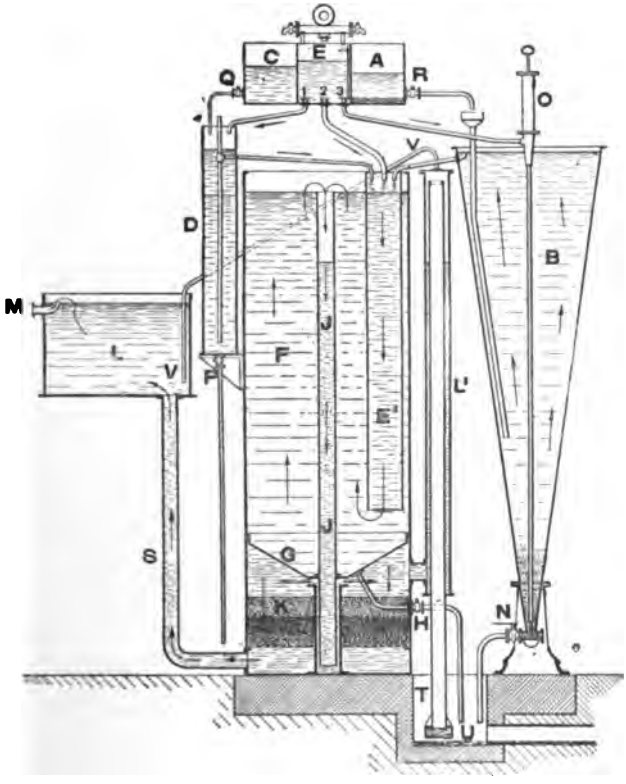

FIG. 12.—Reisert Automatic Water Softener and Purifier.

of water per hour. It has a *reaction chamber* F, 5 feet 11 inches in diameter and 12 feet 6 inches high. The diameter of the *lime saturator* B varies according to the quantity of lime required. The entire plant requires a ground area of about 6 feet by 10 feet and the overall height from the top of the tank is about 16 feet. A is the tank in which the lime is slaked, B the automatic *lime-saturator* and *decanter*, C the *soda-mixing tank*, D the *soda chamber*,

E the *water distributing tank*, F the *reaction chamber*, and K an *automatic self-cleansing filter*.

The quantity of lime required for a day's working is slaked in A, and the lime-paste is then conveyed through the short pipe by opening cock R, to the bottom of B. The quantity of soda required for a day's working is dissolved in C, and by opening cock Q, passed into D. Water is run from E on to the soda solution contained in D, through the small micrometer valve 1, which is adjusted in accordance with the amount of soda required in the reaction chamber F. In a similar manner a constant supply of clear lime-water is obtained by water running through the micrometer valve 3, through the central pipe O, into B, the lime-water passing through the overflow pipe into the mixing pipe E′. The water which has to be treated flows into the *water-distributing tank* E, and from here through the micrometer valve 2 to the *mixing pipe* E′, in which it meets the lime-water and the soda solution. The reaction takes place in F. The water then flows through pipe J into the *filter chamber* K, and from here through the sand filter through pipe S into tank L. The purified water flows away at M.

The height of the column of water in pipe J will vary with the resistance in the filter bed, and as the latter fouls the water will rise in J, and accordingly, in the syphon-pipe L. If the resistance in the filter-bed causes the water to overflow this pipe, it will act as a syphon and the current through the filter-bed will be instantly reversed. The filter will thus be cleansed by the clear water from tank L being drawn through it. The sediment is discharged at T into the gully U. Air enters through pipe V, as soon as tank L becomes empty. The action of the syphon is destroyed and the filter resumes its normal action. In another type of "Reisert Purifier" the filter is cleansed by means of air.

In a special type of apparatus, built on the same principle, provision is made for using either caustic soda alone, or in conjunction with sodium carbonate, according to the kind of hardness of the water which is to be treated. Difficulties seem to have been experienced in the practical working of the apparatus if the hardness of the water is less than 12°, or if it contains a considerable quantity of mud, in that some of the fine sediment is not effectively removed by the filters.

PART III

CHEMICALS AND MORDANTS[1]

Acetate of Iron, v. Ferrous Acetate.

Acetate of Lime, v. Calcium Acetate.

Acetate of Soda, v. Sodium Acetate.

Acetic Acid or Pyroligneous Acid.
$C_2H_4O_2$. Mol. weight, 60.

Commercial acetic acid is usually sold at from 8° to 12° Tw. Acetic acid is chiefly used in dyeing, in dissolving some of the coal tar colours and in the correction of hard water, whilst the pyroligneous acid is employed in the manufacture of pyrolignite of iron.

Acetic acid, together with acetate of soda, may be used for producing the silk-like "scroop" on mercerised cotton. See "Tartaric Acid."

The strength of acetic acid cannot be accurately ascertained by means of the hydrometer, but only by titrating with alkali.

Specific gravities above 1·0553 may represent acid of two different strengths. Acetic acid of 78 per cent. shows the highest specific gravity, *i.e.*, 1·0748. Acid of specific gravity 1·0553 may, therefore, contain either 43 per cent. or 100 per cent. of acetic acid. If by the addition of a small quantity of water to the acid the specific gravity is increased, it contains above 78 per cent., but if it is decreased, it contains below 78 per cent. of acetic acid.

Impurities: Commercial acetic acid contains empyreumatic substances and sometimes also sulphates, free sulphuric acid, chlorides and free hydrochloric acid, lead, iron, and calcium. Price, 40 per cent., 11*s*. per cwt.

Alizarine Oil, v. Turkey-red Oil.

Alkaline Chrome Mordant.

[1] In many cases the current market prices of the chemicals have been given.

SPECIFIC GRAVITY OF ACETIC ACID AT 59° F. (15° C.) (OUDEMANS).

Specific Gravity.	Acetic Acid per cent.	Specific Gravity.	Acetic Acid per cent.	Specific Gravity.	Acetic Acid per cent.
0·9992	0	1·0459	34	1·0725	68
1·0007	1	1·0470	35	1·0729	69
1·0022	2	1·0481	36	1·0733	70
1·0037	3	1·0492	37	1·0737	71
1·0052	4	1·0502	38	1·0740	72
1·0067	5	1·0513	39	1·0742	73
1·0083	6	1·0523	40	1·0744	74
1·0098	7	1·0533	41	1·0746	75
1·0113	8	1·0543	42	1·0747	76
1·0127	9	1·0552	43	1·0748	77
1·0142	10	1·0562	44	1·0748	78
1·0157	11	1·0571	45	1·0748	79
1·0171	12	1·0580	46	1·0748	80
1·0185	13	1·0589	47	1·0747	81
1·0200	14	1·0598	48	1·0746	82
1·0214	15	1·0607	49	1·0744	83
1·0228	16	1·0615	50	1·0742	84
1·0242	17	1·0623	51	1·0739	85
1·0256	18	1·0631	52	1·0736	86
1·0270	19	1·0638	53	1·0731	87
1·0284	20	1·0646	54	1·0726	88
1·0298	21	1·0653	55	1·0720	89
1·0311	22	1·0660	56	1·0713	90
1·0324	23	1·0666	57	1·0705	91
1·0337	24	1·0673	58	1·0696	92
1·0350	25	1·0679	59	1·0686	93
1·0363	26	1·0685	60	1·0674	94
1·0375	27	1·0691	61	1·0660	95
1·0388	28	1·0697	62	1·0644	96
1·0400	29	1·0702	63	1·0625	97
1·0412	30	1·0707	64	1·0604	98
1·0424	31	1·0712	65	1·0580	99
1·0436	32	1·0717	66	1·0553	100
1·0447	33	1·0721	67		

H. Koechlin,[1] recommends the following chromium mordant, which is excellently suited for mordanting cotton piecegoods:

[1] *Journ. Soc. Dyers and Colourists*, 1885, p. 18, and 1886, p. 25.

Two measures of chromium acetate (25° Tw.), are mixed with two measures of caustic soda lye (66° Tw.), and half to one measure of water. One measure of caustic soda lye is then added to five measures of this mixture.

Henry Schmid[1] suggests another alkaline chrome mordant, which, however, decomposes very readily: 100 parts of chrome alum are precipitated with 330 parts of soda ash (58 per cent.). The precipitate is washed and dissolved in 50 parts of caustic soda lye (50° Tw.).

By using alkaline chrome mordants, chromium oxide is readily fixed on the cotton fibre, without the application of any fixing agent.

Alkaline Pink Mordant, v. Aluminate of Soda.

Alum:—Potash Alum.

$K_2SO_4Al_2(SO_4)_3 + 24\ H_2O$. Mol. weight, 948·7. Price, £5 15*s.* per ton.

Ammonia Alum.

$(NH_4)_2\ SO_4Al_2\ (SO_4)_3 + 24\ H_2O$. Mol. weight, 906·5.

Alum is chiefly used in the preparation of aluminium mordants, but it is more expensive than aluminium sulphate.

SPECIFIC GRAVITY OF SOLUTIONS OF POTASH ALUM AT 17·5° C. (GERLACH).

Degrees Tw.	Specific Gravity.	Per cent. $Al_2K_2(SO_4)_4$.	Per cent. $Al_2K_2(SO_4)_4 + 24\ H_2O$.
4	1·0205	2·1792	4
8	1·0415	4·3548	8
12·7	1·0635	6·5379	12
13·8	1·0690	7·0824	13

10 gallons of water dissolve at:—

50°	68°	86°	104°	158°	212° F.
9·5	15·1	22·0	30·9	90·7	357·5 lbs. of potash alum.

Alum is added to the dye-bath in dyeing some of the basic

[1] *Journ. Soc. Dyers and Colourists*, 1886, p. 26.

cotton dyestuffs in order to obtain level shades, and in the dyeing of Soluble Blues, Cotton Blues, etc.

Alumina, v. Aluminium Hydroxide.

Aluminate of Soda or Alkaline Pink Mordant.

$Na_2 Al_2 O_4$. Mol. weight, 164·3.

Aluminate of soda is obtained by dissolving freshly precipitated aluminium hydroxide in caustic soda. It is used as a mordant for Turkey-red on cotton. The cotton fabrics are dried after impregnation with the mordant and then passed through a solution of ammonium chloride. Aluminium hydroxide is fixed on the fibre. Price £29 to £34 per ton.

Aluminium Acetate.

$Al_2(C_2H_3O_2)_6$. Mol. weight, 408·3.

Aluminium acetate is prepared by dissolving aluminium hydroxide in acetic acid or by double decomposition of aluminium sulphate with sugar of lead or calcium acetate. The so-called "red liquor" is usually employed in dyeing, in place of aluminium acetate.

SPECIFIC GRAVITY OF SOLUTIONS OF ALUMINIUM ACETATE AT 17° C.

Specific Gravity.	Degrees Tw.	Degrees Bé.	Grms. Al_2O_3 per litre.
1·100	20·0	13·0	40·8
1·098	19·6	12·8	40·0
1·086	17·2	11·3	35·0
1·074	14·8	9·9	30·0
1·062	12·4	8·3	25·0
1·050	10·0	6·7	20·0
1·038	7·4	5·0	15·0
1·025	5·0	3·4	10·0
1·012	2·2	1·6	5·0

$$Al_2 (SO_4)_3 + 3\ Pb\ (C_2H_3O_2)_2 = 2\ Al\ (C_2H_3O_2)_3 + 3\ PbSO_4.$$

Basic aluminium acetates are obtained by adding soda ash to a solution of the normal acetate. When heated, solutions of the basic acetates dissociate. The more basic the salt, the lower is the temperature at which dissociation starts. Price, aluminium acetate, 16° Tw., 6*d.* per gallon.

Aluminium Hydrate, v. Aluminium Hydroxide.

Aluminium Hydroxide,—Aluminium Hydrate or Alumina.
$Al_2(OH)_6$. Mol. weight, 156.

Aluminium hydroxide is formed by precipitating a solution of aluminium sulphate with sodium carbonate. Pure aluminium hydroxide is obtained by adding ammonia to the hot solution of an aluminium salt.

It is chiefly employed in the preparation of aluminium mordants.

Aluminium Hypochlorite or Wilson's Bleaching Liquor.

Aluminium hypochlorite is prepared by adding a solution of bleaching powder to one of aluminium sulphate.

It decomposes readily, liberating oxygen, and has been used as a bleaching agent.

Aluminium Sulphate.
$Al_2(SO_4)_3 + 18\ H_2O$. Mol. weight, 666·4.

Aluminium sulphate is soluble in 1 part of cold, and $\frac{1}{10}$ part of boiling water. Impurities:—Iron, free sulphuric acid. Aluminium sulphate is employed in the preparation of aluminium mordants. Price, £4 10*s*. per ton.

Basic aluminium sulphates are obtained by adding soda to a solution of aluminium sulphate or alum. They are used in Turkey-red dyeing and may be prepared in the following manner:—Dissolve 40 lbs. of aluminium sulphate in 20 gallons of water, and slowly add to this a solution of 5 lbs. of soda ash in 2½ gallons of water.

The basicity of the salt varies with the amount of soda used.

$$Al_2(SO_4)_3 + 3\ Na_2CO_3 + H_2O = 2\ Al(SO_4)(OH) + Na_2\ SO_4 + CO_2$$

This basic salt has been placed on the market by Messrs. Peter Spence & Co., Ltd.

$$2\ Al_2(SO_4)_3 + 3\ Na_2CO_3 + 3\ H_2O = Al_4(SO_4)_3(OH)_6 + 3\ Na_2SO_4 + 3\ CO_2.$$

$$Al_2(SO_4)_3 + 2\ Na_2CO_3 + 2\ H_2O = Al_2(SO_4)(OH)_4 + 2\ Na_2SO_4 + 2\ CO_2.$$

Liechti and Suida have shown that the more basic the salt, the

SPECIFIC GRAVITY OF SOLUTIONS OF ALUMINIUM SULPHATE (BASED ON LARSSON).

Sp. Gr. at 15° C.	Degrees Tw.	Per cent. $Al_2(SO_4)_3$.	Sp. Gr. at 15° C.	Degrees Tw.	Per cent. $Al_2(SO_4)_3$.
1·010	2·0	0·93	1·176	35·2	17·72
1·021	4·2	1·87	1·185	37·0	18·65
1·031	6·2	2·8	1·194	38·8	19·58
1·040	8·0	3·73	1·203	40·6	20·51
1·050	10·0	4·66	1·211	42·2	21·45
1·059	11·8	5·59	1·220	44·0	22·38
1·068	13·6	6·53	1·228	45·6	23·31
1·078	15·6	7·46	1·236	47·2	24·24
1·087	17·4	8·45	1·244	48·8	25·18
1·096	19·2	9·32	1·252	50·4	26·11
1·105	21·0	10·26	1·261	52·2	27·04
1·114	22·8	11·19	1·269	53·8	27·97
1·123	24·6	12·12	1·277	55·4	28·91
1·132	26·4	13·05	1·285	57·0	29·84
1·141	28·2	13·99	1·293	58·6	30·77
1·150	30·0	14·92	1·301	60·2	31·70
1·159	31·8	15·85	1·309	61·8	32·64
1·168	33·6	16·78			

more readily it dissociates when its solution is diluted with water, or when it is heated, and if cotton is steeped in the solution and afterwards dried, the more alumina is fixed on the fibre.

Aluminium Sulphate-Acetates, v. Aluminium Sulpho-Acetates.

Aluminium Sulpho-Acetates or Aluminium Sulphate-Acetates (Red Liquor).

The aluminium sulpho-acetates are obtained by adding an insufficient quantity of sugar of lead to a solution of aluminium sulphate.

The mixtures of aluminium acetate and sulphate-acetates, are known in commerce as "red liquors." The composition of commercial red liquors varies very considerably.

The following methods are recommended by the Badische Anilin & Soda Fabrik for the preparation of (1) the normal, and (2) the basic sulphate-acetates:—

(1) Dissolve 8½ lbs. of acetate of lead in hot water and mix

with a hot solution of 12½ lbs. of aluminium sulphate; or dissolve 8½ lbs. of acetate of lead in hot water and mix with a hot solution of 6¼ lbs. of aluminium sulphate. Allow the sulphate of lead to settle and remove the clear solution. Wash the precipitate with water and reduce the solution to the strength required by adding the wash-water.

(2) A solution of 9½ lbs. of soda ash in 5 gallons of water is slowly run into a solution of 50 lbs. aluminium sulphate in 25 gallons of water, with continuous stirring. 1 gallon acetic acid, 9° Tw. is then added, and the resulting solution, when cold, reduced to the strength required. Or, 20 lbs. of sodium carbonate (free from iron) are slowly added to a solution of 43 lbs. of aluminium sulphate in 30 gallons of hot water and 5 gallons of acetic acid, 12° Tw.

Red liquors are chiefly used in dyeing Turkey-red, and for rendering yarn or cloth shower-proof. Price, 5*d.* to 7½*d.* per gallon.

Ammonia.
NH_3. Mol. weight, 17.

Ammonium Hydroxide.
$NH_4.OH$. Mol. weight, 35.

Ammonia is used for the purpose of neutralising acids, especially if the latter are present in small quantities in the fibres, and, therefore, difficult to remove by washing. It is also used in neutralising Turkey-red oil.

Price, 20 per cent., specific gravity 0·915, 2*d.* per lb.; 33 per cent.; specific gravity 0·880, 2¾*d.* per lb.

Ammonia Alum, v. Alum.

Ammonium Chloride or Sal Ammoniac.
NH_4Cl. Mol. weight, 53·4.

One part of ammonium chloride is soluble in 3 parts of cold, and 1½ parts of hot water. It is chiefly used in Turkey-red and in Aniline black dyeing. Price £42 per ton.

Ammonium Hydroxide v. Ammonia.

Ammonium Sulphocyanide or Ammonium Thiocyanate.
NH_4CNS. Mol. weight, 76.

Ammonium sulphocyanide is very soluble in water. With copper salts, in neutral acid or solution, it forms an insoluble

salt, and it, therefore, counteracts the injurious effect of copper on some dyestuffs. Price, 95 per cent., 7*d.* per lb.

SPECIFIC GRAVITY OF SOLUTIONS OF AMMONIA AT 15° C. (59° F.) (LUNGE AND WIERNIK).

Specif. Grav.	% NH_3.	1 litre contains grms. NH_3 at 15° C. *	Specif. Grav.	% NH_3.	1 litre contains grms. NH_3 at 15° C. *
1·000	0·00	0·0	0·940	15·63	146·9
0·998	0·45	4·5	0·938	16·22	152·1
0·996	0·91	9·1	0·936	16·82	157·4
0·994	1·37	13·6	0·934	17·42	162·7
0·992	1·84	18·2	0·932	18·03	168·1
0·990	2·31	22·9	0·930	18·64	173·4
0·988	2·80	27·7	0·928	19·25	178·6
0·986	3·30	32·5	0·926	19·87	184·2
0·984	3·80	37·4	0·924	20·49	189·3
0·982	4·30	42·2	0·922	21·12	194·7
0·980	4·80	47·0	0·920	21·75	200·1
0·978	5·30	51·8	0·918	22·39	205·6
0·976	5·80	56·6	0·916	23·03	210·9
0·974	6·30	61·4	0·914	23·68	216·3
0·972	6·80	66·1	0·912	24·33	221·9
0·970	7·31	70·9	0·910	24·99	227·4
0·968	7·82	75·7	0·908	25·65	232·9
0·966	8·33	80·5	0·906	26·31	238·3
0·964	8·84	85·2	0·904	26·98	243·9
0·962	9·35	89·9	0·902	27·65	249·4
0·960	9·91	95·1	0·900	28·33	255·0
0·958	10·47	100·3	0·898	29·01	260·5
0·956	11·03	105·4	0·896	29·69	266·0
0·954	11·60	110·7	0·894	30·37	271·5
0·952	12·17	115·9	0·892	31·05	277·0
0·950	12·74	121·0	0·890	31·75	282·6
0·948	13·31	126·2	0·888	32·50	288·6
0·946	13·88	131·3	0·886	33·25	294·6
0·944	14·46	136·5	0·884	34·10	301·4
0·942	15·04	141·7	0·882	34·95	308·3

The number of pounds of NH_3 per gallon is found by dividing by 100 the number in the column marked *.

Ammonium Vanadate.
NH_4VO_3. Mol. weight, 117·1.

Ammonium vanadate is employed as oxygen carrier in the dyeing of Aniline black. Price, £1 1*s*. 6*d*. per lb.

Aniline.
$C_6H_5NH_2$. Mol. weight 93. Price 5½*d*. per lb.

Aniline Hydrochloride or Aniline Salt.
$C_6H_5NH_2HCl$. Mol. weight, 129·5.

Aniline and aniline salt are used in dyeing Aniline black. Aniline salt frequently contains free hydrochloric acid. This may be detected by Methyl Violet paper, which turns green if free acid is present. Price, 5*d*. per lb.

Antichlor, v. Sodium Thiosulphate.

Antimonine, v. Antimony Lactate.

Antimony Lactate,—Antimonine or Bi-Lactate of Antimony. (C. H. Boehringer Sohn, Ingelheim.)

Antimony lactate contains about 15 per cent. Sb_2O_3. It should be used with the addition of a small quantity of acetic acid. The bath exhausts, and 10 parts of Antimonine will, therefore, replace 10 parts of tartar emetic.

Double Oxalate of Antimony and Potassium. (R. Koepp & Co., Oestrich.)
$K_3Sb(C_2O_4)_3 + 4\ H_2O$. Mol. weight, 573·6.

Double oxalate of antimony and potassium contains 25 per cent. Sb_2O_3. The salt dissociates very readily. 10 parts are equal to 10 parts of tartar emetic. Price, 6*d*. per lb.

Double Tartrate of Antimony and Potassium or Tartar Emetic.
$K\ (SbO)\ C_4H_4O_6 + \frac{1}{2}\ H_2O$. Mol. weight, 332·3.

For dissolving 1 part of tartar emetic :—

	19	12·6	8·2	5·5	3·2 parts of water
at	47°	70°	88°	122°	167° F.

are necessary.

A good quality of tartar emetic contains 42·75 per cent. of Sb_2O_3. It is used for the fixing of the tannins. If the bath is used repeatedly the acid salt which is formed must be neutralised with soda, or better with chalk. Price, 8*d*. per lb.

SPECIFIC GRAVITY OF SOLUTIONS OF TARTAR EMETIC AT 17½° C. (64° F.) (STREIT).

Specific Gravity.	Degrees Tw.	Tartar Emetic, per cent.
1·005	1·0	0·5
1·007	1·4	1·0
1·009	1·8	1·5
1·012	2·4	2·0
1·015	3·0	2·5
1·018	3·6	3·0
1·022	4·4	3·5
1·027	5·4	4·0
1·031	6·2	4·5
1·035	7·0	5·0
1·038	7·6	5·5
1·044	8·8	6·0

Antimony Salt or Double Salt of Antimony Fluoride and Ammonium Sulphate. (E. de Haën, Hanover.)

$SbF_3(NH_4)_2SO_4$. Mol. weight, 309·3.

Antimony salt contains 47 per cent. Sb_2O_3. 9 parts are about equal to 10 parts of tartar emetic. Free acid in the fixing bath must be neutralised with soda or chalk. Price 10*d.* per lb.

Antimony Sodium Fluoride or Double Fluoride of Antimony. (R. Koepp & Co., Oestrich, Rhine.)

SbF_3NaF. Mol. weight, 219.

The salt is readily soluble in water. It contains 66 per cent. Sb_2O_3. It is used in place of tartar emetic. 10 parts of tartar emetic correspond to 6·6 parts of double fluoride of antimony. Free acid in the fixing bath must be neutralised with soda. Price, 7*d.* per lb.

Antimony Trioxide.

Sb_2O_3. Mol. weight, 288·4.

Antimony trioxide dissolved in caustic soda lye and glycerine, is added to the beta-naphthol solution in order to prevent cotton fabrics which have been prepared with this solution turning brown.

RELATIVE STRENGTH OF ANTIMONY COMPOUNDS.[1]

Antimony Compound.	Formula.	Percentage Sb_2O_3.	
		Theoretical.	Actual.
Double Fluoride of Antimony ("75 per cent. Antimony Salt")	$NaF.\ x\ SbF_3$	75·0	73·0
Tartar Emetic	$K(SbO)C_4H_4O_6 + \frac{1}{2}\ H_2O$	43·4	42·75
Sodium Antimony Tartrate	$Na(SbO)C_4H_4O_6 + \frac{1}{2}\ H_2O$	45·6	44·4
Froelich's Patent Antimony Salt	$SbF_3Na_5(SbO)(C_2O_4)_3 + x\ H_2O$	41·0	37·1
Antimony Lactate	Acid Sodium Salt of Antimonyl-Lactic Acid	—	13·0
Liquid Antimony Lactate	Acid Sodium Salt of Antimonyl-Lactic Acid	—	12·5
Antimonine	$[(SbO)(C_3H_5O_3)]_2Ca_3(C_3H_5O_3)_4\ 2C_3H_6O_3$	26·2	13·0
Potassium Antimony Oxalate	$Sb(C_2O_4K)_3 + 4\ H_2O$	28·7	28·6
Antimony Trichloride	$SbCl_3$	63·6	—
Antimony Trifluoride	SbF_3	80·4	—
De Haën's Antimony Salt	$SbF_3(NH_4)_2SO_4$	47·0	—
Double Fluoride of Antimony ("66 per cent. Antimony Salt")	SbF_3NaF	66·0	64·8

Aqua Fortis, v. Nitric Acid.

Arsenate of Soda, v. Sodium Arsenate.

Basic Aluminium Sulphates, v. Aluminium Sulphate.

Benzidine.

$H_2N.C_6H_4.C_6H_4.NH_2$. Mol. weight, 184.

Benzidine coupled with beta-naphthol gives browns.

Black Liquor, v. Ferrous Acetate.

Bleaching Powder, v. Calcium Hypochlorite.

Bichromate of Potash, v. Potassium Bichromate.

Bichrome, v. Potassium Bichromate.

Bi-Lactate of Antimony, v. Antimony Lactate.

Blue Stone, v. Cupric Sulphate.

Blue Vitriol, v. Cupric Sulphate.

Borax, v. Sodium Borate.

[1] (W. S. Williams, *Journal Soc. Chem. Ind.* 1906, XXV., 358.)

Burnt Lime, v. Calcium Oxide.

Calcium Acetate or Acetate of Lime.

$Ca(C_2H_3O_2)_2$. Mol. weight, 158.

Calcium acetate is used in the production of mordants and in dyeing Alizarine red on chromium mordant. It is prepared by slaking 12 lbs. of burnt lime with 5½ gallons of water, to which 42 lbs. of acetic acid, 9° Tw. and 5½ gallons of water are added. Price £7 to £11 per ton.

SPECIFIC GRAVITY OF SOLUTIONS OF CALCIUM ACETATE AT 15° C.

Sp. Gr.	Degrees Tw.	Per Cent. $Ca(C_2H_3O_2)_2$.
1·0260	5·2	5
1·0530	10·6	10
1·0792	15·8	15
1·1051	21·0	20
1·1321	26·0	25
1·1594	32·0	30

Calcium Carbonate,—Carbonate of Lime or Chalk.

$CaCO_3$. Mol. weight, 100.

Calcium carbonate is used in the process of "chalking" in Turkey-red dyeing, as an addition to the tartar emetic bath used in the fixing of tannins and for the purpose of neutralising acids generally.

Calcium Hydrate, v. Calcium Hydroxide.

Calcium Hydroxide,—Slaked Lime or Calcium Hydrate.

$Ca(OH)_2$. Mol. weight, 74.

For dissolving 1 part of calcium hydroxide, 780 parts of water at 15° C., 1,000 parts of water at 54° C., and 1,500 parts of water at 100° C. are required. It is chiefly used in the boiling of cotton fabrics, in indigo dyeing, and in the preparation of mordants.

Calcium Hypochlorite $Ca(OCl)_2$.

Chloride of Lime or Bleaching Powder.

$CaOCl_2$. Mol. weight, 127·6.

Commercial bleaching powder usually contains 35 to 37 per

cent. of available chlorine. It is also sold in solution containing about 7 per cent. of available chlorine. One part of bleaching powder is soluble in about 20 parts of water. Bleaching powder is the principle bleaching agent employed in the bleaching of vegetable fibres.

STRENGTH OF BLEACHING POWDER SOLUTIONS (LUNGE).

Specific Gravity.	Degrees Tw.	Available Chlorine.	
		Grms. per Litre.	Grains per Gallon.
1·1155	23·1	71·79	5025·3
1·1150	23	71·50	5005·0
1·1105	22·1	68·66	4806·2
1·1100	22	68·00	4760·0
1·1060	21·2	65·33	4573·1
1·1050	21	64·50	4515·0
1·1000	20	61·17	4281·9
1·0950	19	58·33	4083·1
1·0900	18	55·18	3862·6
1·0850	17	52·27	3658·9
1·0800	16	48·96	3427·2
1·0750	15	45·70	3199·0
1·0700	14	42·31	2961·7
1·0650	13	38·71	2709·7
1·0600	12	35·81	2506·7
1·0550	11	32·68	2287·6
1·0500	10	29·41	2058·7
1·0450	9	26·62	1863·4
1·0400	8	23·75	1662·5
1·0350	7	20·44	1430·8
1·0300	6	17·36	1215·2
1·0250	5	14·47	1012·9
1·0200	4	11·44	798·7
1·0150	3	8·48	593·6
1·0100	2	5·58	390·6
1·0050	1	2·71	189·7
1·0025	½	1·40	98·0

Price, £4 10*s*. per ton.

Calcium Oxide,—Quicklime or Burnt Lime.

CaO. Mol. weight, 56.

CALCIUM OXIDE IN MILK OF LIME AT 15° C. (LUNGE AND BLATTNER).

Degrees Tw.	Degrees Bé.	*CaO* per cent. (by weight).	Degrees Tw.	Degrees Bé.	*CaO* per cent. (by weight).
1·4	1	0·75	25·0	16	14·13
2·8	2	1·64	26·8	17	15·00
4·4	3	2·54	28·4	18	15·85
5·8	4	3·54	30·4	19	16·75
7·4	5	4·43	32·4	20	17·72
9·0	6	5·36	34·2	21	18·61
10·2	7	6·18	36·0	22	19·40
12·0	8	7·08	38·0	23	20·34
13·4	9	7·87	40·0	24	21·25
15·0	10	8·74	42·0	25	22·15
16·6	11	9·60	44·0	26	23·03
18·2	12	10·54	46·2	27	23·96
20·0	13	11·45	48·2	28	24·90
21·8	14	12·35	50·4	29	25·87
23·2	15	13·26	52·6	30	26·84

Carbonate of Lime, v. Calcium Carbonate.

Castor Oil.

Castor oil is chiefly used in the manufacture of Turkey-red oils. Price, £33 per ton.

Catechu, v. Natural Dyestuffs.

Caustic Soda, v. Sodium Hydroxide.

Chalk, v. Calcium Carbonate.

Chlorate of Potash, v. Potassium Chlorate.

Chloride of Lime, v. Calcium Hypochlorite.

Chloride of Soda, v. Sodium Hypochlorite.

Chrome Alum.

$Cr_2(SO_4)_3 . K_2SO_4 + 24\ H_2O$. Mol. weight, 998·5.

Chrome alum is used for the preparation of chromium mordants and in the after-treatment of substantive cotton dyestuffs. Price, £16 per ton.

Chromic Hydroxide, v. Chromium Hydroxide.

Chromium Acetate.

$Cr_2(C_2H_3O_2)_6$. Mol. weight, 458.

Chromium acetate is prepared by dissolving chromium hydroxide in acetic acid or by the double decomposition of chrome alum and sugar of lead or calcium acetate, or by the reduction of bichrome with glucose in the presence of acetic acid. It is chiefly used as a mordant in calico printing. Price, 6*d*. per lb.

Basic Chromium Acetate.

$Cr_2(C_2H_3O_2)_4(OH)_2$. Mol. weight, 374.

Basic chromium acetates are prepared by adding soda to the normal chromium acetate. Chromium acetate is used in khaki dyeing.

Chromium Bisulphite.

$Cr_2(HSO_3)_6$. Mol. weight, 590·5.

Chromium bisulphite is used as a mordant for Alizarine colours. It is prepared by mixing a strong solution of chrome alum with an excess of bisulphite of soda. Price, 4*s*. per lb.

Chromium Chloride.

Cr_2Cl_6. Mol. weight, 316·8.

Chromium chloride is prepared by the double decomposition of chrome alum with calcium chloride, or by dissolving chromium hydroxide in hydrochloric acid. It is used as a mordant for Alizarine colours. Price 4*s*. 3*d*. per lb.

Basic Chromium Chloride.

$CrCl(OH)_2$. Mol. weight, 121·5.

Basic chromium chloride is obtained by dissolving chromium hydroxide in chromium chloride. It is used for mordanting cotton yarn.

Chromium Chromate or Chromium Mordant.

G.A.I., G.A.II., G.A.III. (*MLB*).

The Höchster Farbwerke bring mordants under this name into the market which are prepared by dissolving chromium hydroxide in chromic acid. Chromium mordant G.A.II., which contains acetic acid, is specially suitable for mordanting cotton.

SPECIFIC GRAVITY OF CHROMIUM MORDANT G.A.II. AT 15° C.

Specific Gravity.	Degrees Tw.	Grms. per litre Cr_2O_3.	Specific Gravity.	Degrees Tw.	Grms. per litre Cr_2O_3.
1·015	3	10	1·175	35	170
1·025	5	20	1·185	37	180
1·035	7	30	1·195	39	190
1·045	9	40	1·205	41	200
1·055	11	50	1·215	43	210
1·065	13	60	1·225	45	220
1·075	15	70	1·235	47	230
1·085	17	80	1·245	49	240
1·095	19	90	1·250	50	250
1·105	21	100	1·266	53·2	260
1·115	23	110	1·276	55·2	270
1·125	25	120	1·287	57·4	280
1·135	27	130	1·298	59·6	290
1·145	29	140	1·309	61·8	300
1·155	31	150	1·320	64·0	310
1·165	33	160	1·328	65·6	317

Chromium Fluoride.
$CrF_3 + 4\ H_2O$. Mol. weight, 181.

Is used for the after-treatment of certain direct cotton and sulphur dyestuffs in order to improve the fastness to washing.

Chromium Hydroxide or Chromic Hydroxide.
$Cr_2(OH)_6$. Mol. weight, 206.

Chromium hydroxide is obtained by precipitating a solution of chrome alum with ammonia. Dissolved in acetic acid it forms chromium acetate.

Common Salt, v. Sodium Chloride.

Copper Sulphate, v. Cupric Sulphate.

Copper Sulphide.
CuS. Mol. weight, 95·6.

Copper sulphide is prepared by dissolving flowers of sulphur in caustic soda, and by adding the solution to a solution of copper sulphate. The precipitate is washed and stored under water. It is chiefly used in printing and dyeing of Aniline black.

Copperas, v. Ferrous Sulphate.

Cotton Spirits or Tin Spirits.

Cotton spirits are mixtures of stannic and stannous salts with other salts.

Cow-dung.—Cow and sheep's dung are chiefly used by calico printers for fixing mordants which have been printed on, in order to produce clear whites in dyeing.

Cupric Chloride.

$CuCl_2 + 2\ H_2O$. Mol. weight, 170·5.

Copper chloride is employed as an oxygen carrier in the production of Aniline black and Diphenyl black. Price, 1*s.* 10*d.* per lb.

Cupric Sulphate,—Copper Sulphate,—Blue Vitriol or Blue Stone.

$CuSO_4 + 5\ H_2O$. Mol. weight, 249·7.

Copper sulphate is used in the after-treatment of direct cotton dyes in order to improve their fastness to light, and in the dyeing of Aniline black.

SPECIFIC GRAVITY OF SOLUTIONS OF COPPER SULPHATE AT 18° C. (SCHIFF AND GERLACH).

Per cent. $CuSO_4 + 5\ H_2O$.	Specific Gravity.	Degrees Tw.	Per cent. $CuSO_4 + 5\ H_2O$.	Specific Gravity.	Degrees Tw.
1	1·0093	1·8	16	1·1063	21·3
2	1·0126	2·5	17	1·1135	22·7
3	1·0190	3·8	18	1·1208	24·2
4	1·0254	5·0	19	1·1281	25·6
5	1·0319	6·4	20	1·1354	27·1
6	1·0384	7·7	21	1·1427	28·5
7	1·0450	9·0	22	1·1501	30·0
8	1·0516	10·3	23	1·1585	31·7
9	1·0582	11·6	24	1·1659	33·2
10	1·0649	13·0	25	1·1738	34·8
11	1·0716	14·3	26	1·1817	36·2
12	1·0785	15·7	27	1·1898	37·9
13	1·0854	17·1	28	1·1980	39·6
14	1·0923	18·4	29	1·2063	41·3
15	1·0993	19·9	30	1·2146	42·9

10 gallons of water dissolve at:—

50°	68°	86°	122°	158°	194°	212° F.	
37	42	49	66	95	156	203	lbs. of copper sulphate.

Price £20 per ton.

Dianisidine.

$H_2N.C_6H_3(O.CH_3).C_6H_3\ (O.CH_3)\ NH_2$. Mol. weight, 244.

Dianisidine, coupled with beta-naphthol, produces reddish-violet. See "Dianisidine Blue."

Divi-divi, v. Tannins.

Double Fluoride of Antimony, v. Antimony Sodium Fluoride.

Double Salt of Antimony Fluoride and Ammonium Sulphate, v. Antimony Salt.

Eau de Labaraque, v. Sodium Hypochlorite.

SPECIFIC GRAVITY OF PYROLIGNITE OF IRON AT 18° C.

Specific Gravity.	Degrees Tw.	Grms. per litre Fe_2O_3.	Specific Gravity.	Degrees Tw.	Grms. per litre Fe_2O_3.
1·010	2·0	5	1·144	28·8	100
1·018	3·6	10	1·151	30·2	105
1·025	5·0	15	1·158	31·6	110
1·032	6·4	20	1·165	33·0	115
1·039	7·8	25	1·172	34·4	120
1·046	9·2	30	1·179	35·8	125
1·053	10·6	35	1·186	37·2	130
1·060	12·0	40	1·193	38·6	135
1·067	13·4	45	1·200	40·0	140
1·074	14·8	50	1·207	41·4	145
1·081	16·2	55	1·214	42·8	150
1·088	17·6	60	1·221	44·2	155
1·095	19·0	65	1·228	45·6	160
1·102	20·4	70	1·235	47·0	165
1·109	21·8	75	1·242	48·4	170
1·116	23·2	80	1·250	50·0	175
1·123	24·6	85	1·258	51·6	180
1·130	26·0	90	1·266	53·2	185
1·137	27·4	95	1·274	54·8	190

SPECIFIC GRAVITY OF SOLUTIONS OF FERROUS SULPHATE AT 15° C. (59° F.) (GERLACH).

Degrees Tw.	Per cent. $FeSO_4+7$ aqu.	Specific Gravity.	Degrees Tw.	Per cent. $FeSO_4+7$ aqu.	Specific Gravity.
1·0	1	1·005	23·6	21	1·118
2·2	2	1·011	25·0	22	1·125
3·2	3	1·016	26·2	23	1·131
4·2	4	1·021	27·4	24	1·137
5·4	5	1·027	28·6	25	1·143
6·4	6	1·032	29·8	26	1·149
7·4	7	1·037	31·0	27	1·155
8·6	8	1·043	32·2	28	1·161
9·6	9	1·048	33·6	29	1·168
10·8	10	1·054	34·8	30	1·174
11·8	11	1·059	36·0	31	1·180
13·0	12	1·065	37·4	32	1·187
14·2	13	1·071	38·6	33	1·193
15·4	14	1·077	40·0	34	1·200
16·4	15	1·082	41·2	35	1·206
17·6	16	1·088	42·6	36	1·213
18·8	17	1·094	43·8	37	1·219
20·0	18	1·100	45·2	38	1·226
21·2	19	1·106	46·4	39	1·232
22·2	20	1·112	47·8	40	1·239

Ferric Nitrate.

$Fe_2(NO_3)_6$. Mol. weight, 483·8.

Ferric nitrate is prepared by dissolving iron in nitric acid. It is used in dyeing iron-buff and Prussian blue.

Ferric Sulphate. (*Nitrate of Iron.*)

$Fe_2(SO_4)_3$. Mol. weight, 399·9.

"Nitrate of Iron" consists chiefly of ferric sulphate. According to Moyret some of the commercial products correspond to the formula $Fe_4(SO_4)_5(OH)_2$. It is prepared by treating copperas with nitric acid and sulphuric acid. It may be used in place of acetate of iron. Price, 3½*d.* per lb.

Ferrous Acetate,—Iron Liquor,—Black Liquor or Pyrolignite of Iron.

$Fe(C_2H_3O_2)_2 + 4\,H_2O$. Mol. weight, 245·8.

Ferrous acetate is prepared by dissolving iron in pyroligneous acid, or by double decomposition of ferrous sulphate and crude calcium acetate.

Impurities.—Ferrous and ferric sulphate, excess of acetic acid.

Ferrous acetate is extensively used as a mordant for Alizarine colours, for black dyeing with logwood, and in the production of iron-buffs and khaki shades. Price, 24° Tw., 5*d.* per gallon.

Ferrous Sulphate,—Copperas or Green Vitriol.

$FeSO_4 + 7\,H_2O$. Mol. weight, 278.

Impurities.—Copper, alumina, zinc and free acid.

Ferrous sulphate is readily soluble in water, and is used as a reducing agent in indigo dyeing, in the dyeing of greys and blacks, in the fixing of tannin mordants, and for the production of various iron mordants. Price, £1 4*s.* per ton.

Formaldehyde or Formalin.

CH_2O. Mol. weight, 30.

The commercial formaldehyde contains from 30 to 40 per cent. CH_2O.

The fastness to washing of a number of the substantive cotton dyestuffs is considerably improved by an after-treatment with formaldehyde. Price, 40 per cent., 52*s.* 6*d.* per cwt.

Formic Acid.

CH_2O_2. Mol. weight, 46.

Formic acid may be used in place of hydrochloric acid in Aniline black dyeing, and as a substitute for acetic acid in the dyeing of the Alizarines. It is also employed for producing the silk-like "scroop" on mercerised cotton. Price, 90 per cent., 36*s.* per cwt.

Galls, v. Tannins.

Glauber's Salt, v. Sodium Sulphate.

Glucose or Grape Sugar.

Glucose is employed as a reducing agent and in the dyeing of some of the Thiogene dyestuffs (sulphur dyestuffs). Price, 14*s.* per cwt.

Green Vitriol, v. Ferrous Sulphate.

Hydrochloric Acid,—Muriatic Acid or Spirits of Salt.

HCl. Mol. weight, 36·5.

SPECIFIC GRAVITY OF FORMIC ACID AT 68° F. (20° C.) (RICHARDSON & ALLAIRE).

Degrees Tw.	Specific Gravity.	Formic Acid. Per cent.	
		By weight.	By volume.
0·0	0·9983	0	0·00
0·4	1·0020	1	0·82
0·9	1·0045	2	1·64
1·4	1·0071	3	2·48
1·9	1·0094	4	3·30
2·3	1·0116	5	4·14
2·8	1·0142	6	4·98
3·4	1·0171	7	5·81
3·9	1·0197	8	6·68
4·4	1·0222	9	7·55
4·9	1·0247	10	8·40
7·4	1·0371	15	12·80
9·8	1·0489	20	17·17
12·2	1·0610	25	21·73
14·6	1·0730	30	26·37
16·9	1·0848	35	31·10
19·3	1·0964	40	35·90
21·7	1·1086	45	40·82
24·2	1·1208	50	45·88
26·4	1·1321	55	51·01
28·5	1·1425	60	56·13
30·8	1·1544	65	61·44
33·1	1·1656	70	66·80
35·4	1·1770	75	72·27
37·2	1·1861	80	77·67
39·1	1·1954	85	83·19
40·9	1·2045	90	88·74
42·8	1·2141	95	94·48
44·3	1·2213	100	100·00

Impurities in commercial hydrochloric acid:—Iron, arsenic, sulphuric acid, organic matter.

Hydrochloric acid is chiefly employed in bleaching. Price, (Tower Salts, 30° Tw.), 1*s.* 3*d.*; (Cylinder, 30° Tw.), 2*s.* 9*d.* per carboy.

Specific Gravity of Hydrochloric Acid at 15° C. (59° F.) (Lunge and Marchlewski).

Specific Gravity at 59° F.	Degrees Tw.	100 lbs. contain		1 gallon contains	
		HCl.	Acid of 32° Tw.	*HCl.*	Acid of 32° Tw.
		lbs.	lbs.	lbs.	lbs.
1·000	0	0·16	0·49	0·016	0·049
1·005	1	1·15	3·58	0·12	0·36
1·010	2	2·14	6·66	0·22	0·67
1·015	3	3·12	9·71	0·32	0·99
1·020	4	4·13	12·86	0·42	1·31
1·025	5	5·15	16·04	0·53	1·64
1·030	6	6·15	19·16	0·64	1·97
1·035	7	7·15	22·27	0·74	2·31
1·040	8	8·16	25·42	0·85	2·64
1·045	9	9·16	28·53	0·96	2·98
1·050	10	10·17	31·68	1·07	3·33
1·055	11	11·18	34·82	1·18	3·67
1·060	12	12·19	37·97	1·29	4·03
1·065	13	13·19	41·09	1·41	4·38
1·070	14	14·17	44·14	1·52	4·72
1·075	15	15·16	47·22	1·63	5·08
1·080	16	16·15	50·31	1·74	5·43
1·085	17	17·13	53·36	1·86	5·79
1·090	18	18·11	56·41	1·97	6·15
1·095	19	19·06	59·37	2·09	6·50
1·100	20	20·01	62·33	2·20	6·86
1·105	21	20·97	65·32	2·32	7·22
1·110	22	21·92	68·28	2·43	7·58
1·115	23	22·86	71·21	2·55	7·94
1·120	24	23·82	74·20	2·67	8·31
1·125	25	24·78	77·19	2·78	8·68
1·130	26	25·75	80·21	2·91	9·06
1·135	27	26·70	83·18	3·03	9·44
1·140	28	27·66	86·17	3·15	9·82
1·145	29	28·61	89·13	3·28	10·21
1·150	30	29·57	92·11	3·40	10·59
1·155	31	30·55	95·17	3·53	10·99
1·160	32	31·52	98·19	3·66	11·39
1·165	33	32·49	101·21	3·79	11·79
1·170	34	33·46	104·24	3·92	12·20
1·175	35	34·42	107·22	4·04	12·60
1·180	36	35·39	110·24	4·18	13·01
1·185	37	36·31	113·11	4·30	13·40
1·190	38	37·23	115·98	4·43	13·80
1·195	39	38·16	118·87	4·56	14·21
1·200	40	39·11	121·84	4·69	14·62

Hydrogen Peroxide.
H_2O_2. Mol. weight, 34.

Commercial hydrogen peroxide contains about 3 per cent. of H_2O_2. Its strength is usually expressed in volumes of available oxygen. 3 per cent. H_2O_2 = 12 volumes oxygen.

Concentrated solutions are very unstable; weak solutions, slightly acidulated by adding a small quantity of phosphoric acid, keep much better.

Hydrogen peroxide is an excellent bleaching agent, but on account of its high price it cannot be used in cotton bleaching. Price, 12 vols., 1*s*. per gallon.

Hydrosulphite, v. Sodium Hydrosulphite and Sodium Sulphoxylate-Formaldehyde.

Hyposulphite of Soda, v. Sodium Thiosulphate.

Iron Liquor, v. Ferrous Acetate.

Lead Acetate or Sugar of Lead.
$Pb(C_2H_3O_2)_2 + 3\ H_2O$. Mol. weight, 379.

Sugar of lead is prepared by dissolving litharge in acetic acid. If pyroligneous acid is used in place of acetic acid, *Brown Sugar of Lead* is obtained.

Sugar of lead is chiefly used in the preparation of mordants and in dyeing chrome yellow and orange.

Basic acetate of lead is obtained by boiling a solution of acetate of lead with litharge. See, "Chrome Yellow," p. 157.

Lead Nitrate.
$Pb(NO_3)_2$. Mol. weight, 331.

Lead nitrate is used in the preparation of mordants. Price, £25 per ton.

Litharge.
PbO. Mol. weight, 223.

Litharge is used in the preparation of basic lead acetate. See "Chrome Yellow." Price, £17 10*s*. per ton.

Ludigol. (B.A.S.F.).

Ludigol is added to the boiling liquor in the kier when boiling pieces containing yarn dyed with the vat-colours, in order to prevent marking-off.

SPECIFIC GRAVITY OF SOLUTIONS OF LEAD ACETATE AT 20° C., (68° F.) (F. SALOMON).

Grms. in 100 c.c.	Specific Gravity.	Degrees Tw.	Grms. in 100 c.c.	Specific Gravity.	Degrees Tw.
1	1·0062	1·2	26	1·1603	32·0
2	1·0124	2·5	27	1·1663	33·3
3	1·0186	3·7	28	1·1723	34·5
4	1·0248	4·9	29	1·1783	35·7
5	1·0311	6·2	30	1·1844	36·9
6	1·0373	7·5	31	1·1903	38·1
7	1·0435	8·7	32	1·1963	39·3
8	1·0497	9·9	33	1·2022	40·4
9	1·0559	11·2	34	1·2082	41·6
10	1·0622	12·4	35	1·2142	42·8
11	1·0684	13·7	36	1·2201	44·0
12	1·0746	14·9	37	1·2261	45·2
13	1·0808	16·2	38	1·2320	46·4
14	1·0870	17·4	39	1·2380	47·6
15	1·0932	18·6	40	1·2440	48·8
16	1·0994	19·9	41	1·2499	45·0
17	1·1056	21·1	42	1·2558	51·2
18	1·1118	22·4	43	1·2617	52·3
19	1·1180	23·6	44	1·2676	53·5
20	1·1242	24·8	45	1·2735	54·7
21	1·1302	26·0	46	1·2794	55·9
22	1·1362	27·2	47	1·2853	57·1
23	1·1422	28·4	48	1·2912	58·2
24	1·1482	29·6	49	1·2971	59·4
25	1·1543	30·9	50	1·3030	60·6

Price, £24 per ton.

Manganese Sulphate.

$MnSO_4$. Mol. weight, 151.

Manganese sulphate, like "bronze liquor," may be used in the production of manganese bronze. Price, £13 per ton.

Manganous Chloride.

$MnCl_2 + 4H_2O$. Mol. weight, 198.

Manganous chloride, known in commerce as "bronze liquor," is chiefly employed in dyeing manganese bronze. Price, 1*s*. 6*d*. per lb.

Metatoluylenediamine.

$CH_3.C_6H_3(NH_2)_2$. Mol. weight, 122.

Metatoluylenediamine is used for developing diazotised substantive dyestuffs.

Monopole Oil, v. Soap.

Monopole Soap, v. Soap.

Muriatic Acid, v. Hydrochloric Acid.

Myrabolans, v. Tannins.

Naphthol. (*Alpha-Naphthol, Beta-Naphthol*).

$C_{10}H_7(OH)$. Mol. weight, 144.

The naphthols dissolve in caustic soda, forming salts (naphtholates).

Beta-naphthol is chiefly used in the production of "Para Red," the developing of diazotised Primuline, etc. Price, 1*s.* 6*d.* per lb.

Beta-naphthol R (*M.L.B.*).

Beta-naphthol R is a mixture of beta-naphthol with beta-naphthol monosulphonic acid F. It is used in place of beta-naphthol in order to obtain more bluish shades of "Para Red."

Naphthylamine. (*Alpha-Naphthylamine*).

$C_{10}H_7NH_2$. Mol. weight, 143.

Alpha-naphthylamine is used in dyeing Naphthylamine Claret. Price, 7*d.* per lb.

Nitric Acid or Aqua fortis.

HNO_3. Mol. weight, 63.

Nitric acid is usually sold at about 66° Tw.

Impurities.—Commercial nitric acid may contain lower oxides of nitrogen, iron, sulphuric acid, sodium sulphate and sodium nitrate.

Nitric acid is chiefly used in the preparation of mordants. Price, 89° Tw., 1¾*d.* per lb.

Nitrotoluidine.

$CH_3.C_6H_3(NO_2)NH_2$. Mol. weight, 152.

Nitrotoluidine is used in the production of a brilliant orange with beta-naphthol.

Olein, v. Turkey-red Oil.

Oil of Vitriol, v. Sulphuric Acid.

Specific Gravity of Nitric Acid at 15° C. (Lunge and Rey).

Degrees Bé.	Degrees Tw.	Per cent. HNO_3, by weight.	Degrees Bé.	Degrees Tw.	Per cent. HNO_3, by weight.
0·0	0	0·10	23·0	38	30·88
0·7	1	1·00	23·5	39	31·62
1·4	2	1·90	24·0	40	32·36
2·1	3	2·80	24·5	41	33·09
2·7	4	3·70	25·0	42	33·82
3·4	5	4·60	25·5	43	34·55
4·1	6	5·50	26·0	44	35·28
4·7	7	6·38	26·4	45	36·03
5·4	8	7·26	26·9	46	36·78
6·0	9	8·13	27·4	47	37·53
6·7	10	8·99	27·9	48	38·29
7·4	11	9·84	28·4	49	39·05
8·0	12	10·68	28·8	50	39·82
8·7	13	11·51	29·3	51	40·58
9·4	14	12·33	29·7	52	41·34
10·0	15	13·15	30·2	53	42·10
10·6	16	13·95	30·6	54	42·87
11·2	17	14·74	31·1	55	43·64
11·9	18	15·53	31·5	56	44·41
12·4	19	16·32	32·0	57	45·18
13·0	20	17·11	32·4	58	45·95
13·6	21	17·89	32·8	59	46·72
14·2	22	18·67	33·3	60	47·49
14·9	23	19·45	33·7	61	48·26
15·4	24	20·23	34·2	62	49·07
16·0	25	21·00	34·6	63	49·89
16·5	26	21·77	35·0	64	50·71
17·1	27	22·54	35·4	65	51·53
17·7	28	23·31	35·8	66	52·37
18·3	29	24·08	36·0	66·5	52·80
18·8	30	24·84	36·2	67	53·22
19·3	31	25·60	36·6	68	54·07
19·8	32	26·36	37·0	69	54·93
20·3	33	27·12	37·4	70	55·79
20·9	34	27·88	37·8	71	56·66
21·4	35	28·63	38·2	72	57·57
22·0	36	29·38	38·6	73	58·48
22·5	37	30·13	39·0	74	59·39

SPECIFIC GRAVITY OF NITRIC ACID AT 15° C.—*continued.*
(LUNGE AND REY.)

Degrees Bé.	Degrees Tw.	Per cent. HNO_3, by weight.	Degrees Bé.	Degrees Tw.	Per cent. HNO_3, by weight.
39·4	75	60·30	44·8	90	77·28
39·8	76	61·27	45·1	91	78·60
40·0	—	61·92	45·4	92	79·98
40·1	77	62·24	45·8	93	81·42
40·5	78	63·23	46·1	94	82·90
40·8	79	64·25	46·4	95	84·45
41·2	80	65·30	46·8	96	86·05
41·6	81	66·40	47·1	97	87·70
42·0	82	67·50	47·4	98	89·60
42·3	83	68·63	47·8	99	91·60
42·7	84	69·80	48·1	100	94·09
43·1	85	70·98	48·4	101	96·39
43·4	86	72·17	48·5	—	97·50
43·8	87	73·39	48·7	102	98·10
44·1	88	74·68	49·0	103	99·07
44·4	89	75·98	49·4	104	99·67

Olive Oil.

Olive oil is used in preparing the cotton for Turkey-red dyeing. Emulsions of olive oil with very dilute solutions of soda ash are extensively used for softening cotton which has been dyed Aniline black, chrome yellow, catechu brown, etc. Price, £56 to £60 per ton.

Oxalic Acid.

$C_2H_2O_4 + 2\ H_2O$. Mol. weight, 126. Price, $2\frac{5}{8}d.$ per lb.

Oxygen Powder, v. Sodium Peroxide.

Oxymuriate of Tin, v. Stannic Chloride.

Paranitraniline.

$C_6H_4(NO_2)NH_2$. Mol. weight, 138.

Paranitraniline is used in the production "Para Red" and in the "coupling" of substantive dyestuffs.

Percarbonate of Potash, v. Potassium Percarbonate.

Permanganate of Potash, v. Potassium Permanganate.

Peroxide of Hydrogen, v. Hydrogen Peroxide.

Phenol or Carbolic Acid.
$C_6H_5(OH)$. Mol. weight, 94.

Phenol dissolves in caustic soda, forming phenate of soda. It is used as developer for diazotised substantive dyestuffs. Price, crystallized 39°—40°, 7*d.*, per lb.

Phenylenediamine.
$C_6H_4(NH_2)_2$. Mol. weight, 108.

Phenylenediamine is used as a developer.

Phosphate of Soda, v. Sodium Phosphate.

Pink Salt, v. Stannic Chloride.

Potash Alum, v. Alum.

Potassium Antimony Tartrate, v. Double Tartrate of Antimony and Potassium.

Potassium Bichromate,—Bichromate of Potash or Bichrome.
$K_2Cr_2O_7$. Mol. weight, 294·2.

Potassium bichromate is used in dyeing Aniline black, for the after-treatment of direct cotton dyestuffs, for the production of chrome yellow, chrome orange, cutch browns and logwood blacks.

SPECIFIC GRAVITY OF SOLUTIONS OF POTASSIUM BICHROMATE AT 19·5° C. (KREMERS AND GERLACH).

Specific gravity.	Degrees Tw.	Per cent. $K_2Cr_2O_7$.	Specific gravity.	Degrees Tw.	Per cent. $K_2Cr_2O_7$.
1·007	1·4	1	1·065	13·0	9
1·015	3·0	2	1·073	14·6	10
1·022	4·4	3	1·080	16·0	11
1·030	6·0	4	1·085	17·0	12
1·037	7·4	5	1·097	19·4	13
1·043	8·6	6	1·102	20·4	14
1·050	10·0	7	1·110	22·0	15
1·056	11·2	8			

Ten gallons of water dissolve at :—

30°	50°	104°	176°	212° F.
5	8·5	29·4	73	102 lbs. of bichrome.

Price, 3½*d.* per lb.

Potassium Carbonate.

$K_2CO_3 + 2H_2O$. Mol. weight, 174.

Potassium carbonate is used in indigo dyeing and in the dyeing of a few of the direct cotton dyestuffs. Soda, on account of its cheapness, is employed in place of it wherever possible. Price, 90 per cent., £15 15*s.* per ton.

Potassium Chlorate or Chlorate of Potash.

$KClO_3$. Mol. weight, 122·5.

Solubility.—100 parts of water dissolve 6 parts of $KClO_3$ at 15° C., and 60 parts at 100° C.

Potassium chlorate is chiefly used as an oxidising agent in dyeing and printing of Aniline black. Price, 3½*d.* per lb.

Potassium Ferricyanide or Red Prussiate.

$K_3Fe(CN)_6$. Mol. weight, 329·2.

2½ parts of cold water or 1½ parts of hot water dissolve about 1 part of potassium ferricyanide. With ferrous sulphate it yields Turnbull's blue. Price, 9*d.* per lb.

Potassium Ferrocyanide or Yellow Prussiate.

$K_4Fe(CN)_6 + 3\,H_2O$. Mol. weight, 422·3.

Three parts of cold water or 1 part of boiling water dissolve 1 part of potassium ferrocyanide.

Impurity.—Potassium sulphate.

It is used in Prussian blue dyeing and in the padding of Aniline black. Price, 4¼*d.* per lb.

Potassium Hypochlorite or Eau de Javelle.

$KOCl$. Mol. weight, 90·6.

Potassium hypochlorite is prepared by double decomposition of bleaching powder and potassium carbonate, or by passing chlorine gas into a solution of caustic potash. It is rarely used, the cheaper sodium hypochlorite being generally employed in bleaching.

Potassium Percarbonate or Percarbonate of Potash.

$K_2C_2O_6$. Mol. weight, 198·2.

Potassium percarbonate decomposes in acid solution into oxygen, hydrogen peroxide, and carbon dioxide. It is a very powerful bleaching agent.

Potassium Permanganate or Permanganate of Potash.
$KMnO_4$. Mol. weight, 158.

Potassium permanganate is soluble in 15 parts of cold, and very readily soluble in hot water. It may be used as a stripping agent. It is a very powerful oxidising agent in neutral, in alkaline, and in acid solutions. Price, 35*s*. per cwt.

Preparing Salt, v. Stannate of Soda.

Pyroligneous Acid, v. Acetic Acid.

Pyrolignite of Iron, v. Ferrous Acetate.

Quicklime, v. Calcium Oxide.

Red Liquor, v. Aluminium Sulpho-Acetates.

Red Prussiate, v. Potassium Ferricyanide.

Resorcine.
$C_6H_4(OH)_2$. Mol. weight, 110.

Resorcine is used as a developer for diazotised substantive dyestuffs.

Rongalite, v. Sodium Sulphoxylate-Formaldehyde.

Silicate of Soda, v. Sodium Silicate.

Slaked Lime, v. Calcium Hydroxide.

Soap.

The soda soaps or hard soaps are chiefly used in dyeing. Of these olive oil soaps (Marseilles soap) are employed in dyeing the substantive dyestuffs and in soaping dyed materials. The soap should be neutral, *i.e.*, it should be free from unsaponified fat, and it should not contain any uncombined alkali.

Monopole Soap.—(The Bayer Company, Ltd., Manchester).

Monopole soap gives either a neutral or a slightly acid reaction; it is not affected by dilute solutions of acids or by concentrated salt solutions. It does not form precipitates with lime and magnesia salts, because the salts formed are soluble in excess of the soap. In order to brighten shades, and for dyeing substantive dyestuffs, especially when only hard water is available,

the addition of ½ to 1 per cent. of Monopole soap to the dye-bath will produce excellent results. Price, 6*d.* per lb.

Monopole Oil.—(The Bayer Company, Ltd., Manchester, and Dr. A. Schmitz, Heerdt, Germany).

Monopole oil, in its behaviour, is similar to Monopole soap.

Castor Oil Soap for "Para Red."

Mix 20 lbs. castor oil (of the first pressing) with 17 lbs. caustic soda lye, 36° Tw., and boil for 1 hour; allow the soap to cool for about 5 hours, then add 4 lbs. 14 ozs. hydrochloric acid, 32° Tw., boil for ½ hour, allow to cool, and syphon off the salt solution.

Soda v. Sodium Carbonate.

Soda Ash, v. Sodium Carbonate.

Soda Crystals, v. Sodium Carbonate.

Sodium Acetate or Acetate of Soda.

$Na(C_2H_3O_2) + 3\ H_2O$. Mol. weight, 136.

One part of sodium acetate dissolves in 3½ parts of cold, and in ½ part of hot water. It is used for neutralising mineral acids and as an addition to the diazo-solutions in the dyeing of colours, such as Paranitraniline red, etc. It is also added to the water used for washing cotton which has been dyed with the sulphur colours. Price, £15 per ton.

SPECIFIC GRAVITY OF SOLUTIONS OF SODIUM ACETATE AT 17·5° C. (GERLACH).

Degrees Tw.	Specific Gravity.	$Na(C_2H_3O_2)$ per cent.	$Na(C_2H_3O_2) + 3\ H_2O$ per cent.
3·0	1·015	3·015	5
6·2	1·031	6·030	10
9·4	1·047	9·045	15
12·6	1·063	12·060	20
15·9	1·0795	15·075	25
19·2	1·0960	18·090	30
22·6	1·1130	21·105	35
26·1	1·1305	24·120	40
29·7	1·1485	27·135	45
33·4	1·1670	30·150	50

Sodium Arsenate or Arsenate of Soda.

$Na_2HAsO_4 + 12\,H_2O$. Mol. weight, 402.

The commercial product contains besides sodium arsenate, sodium binarsenate ($NaH_2AsO_4 + H_2O$) and common salt. It is used as a fixing agent for iron and aluminium mordants, and in "dunging" as a substitute for cow-dung. Price, 45 per cent., £12 5*s*. per ton.

Sodium Bichromate or Bichromate of Soda.

$Na_2Cr_2O_7 + 2\,H_2O$. Mol. weight, 298.

Sodium bichromate is used in place of potassium bichromate. It is more readily soluble, and cheaper than the latter. Price, 3*d*. per lb.

SPECIFIC GRAVITY OF SOLUTIONS OF SODIUM BICHROMATE (STANLEY).

Specific Gravity.	Degrees Tw.	$Na_2Cr_2O_7$ per cent.
1·007	1·4	1
1·035	7·0	5
1·071	14·2	10
1·105	21·0	15
1·141	28·2	20
1·171	34·2	25
1·208	41·6	30
1·245	49·0	35
1·280	56·0	40
1·313	62·6	45
1·343	68·6	50

Ten gallons of water dissolve at:—

32°	59°	86°	176°	212° F.	
107	109	127	143	163	lbs. of sodium bichromate.

Sodium Bisulphite.

$NaHSO_3$. Mol. weight, 104.

Sodium bisulphite is usually sold in solution, varying in strength from 65° to 78° Tw.

It is used in the preparation of *hydrosulphite* and as an *anti-chlor*. Price, 50° Tw., 3*s*. 3*d*. per cwt.

SPECIFIC GRAVITY OF SOLUTIONS OF SODIUM BISULPHITE.

Specific Gravity at 15° C.	Degrees Tw.	$NaHSO_3$ per cent.	Specific Gravity at 15° C.	Degrees Tw.	$NaHSO_3$ per cent.
1·008	1·6	1·6	1·171	34·2	16·5
1·022	4·4	2·1	1·190	38·0	18·5
1·038	7·6	3·6	1·210	42·0	20·9
1·052	10·4	5·1	1·230	46·0	23·5
1·068	13·6	6·5	1·252	50·4	25·9
1·084	16·8	8·0	1·275	55·0	28·9
1·100	20·0	9·5	1·298	59·6	31·7
1·116	23·2	11·2	1·321	64·2	34·7
1·134	26·8	12·8	1·345	69·0	38·0
1·152	30·4	14·6			

The Badische Anilin and Soda Fabrik supply sodium bisulphite in powder, which is stable, if kept out of contact with moist air.

Sodium Borate or Borax.

$Na_2B_4O_7 + 10\ H_2O$. Mol. weight, 382.

Sodium borate is soluble in twenty times its weight of cold, and half its weight of boiling water. It acts as a weak alkali, and is sometimes used in the dyeing of cotton with the substantive dyestuffs.

It is also used in the fire-proofing of fabrics. Price, £16 per ton.

Sodium Carbonate,—Soda or Soda Ash.

Na_2CO_3. Mol. weight, 106.

Soda Crystals.

$Na_2CO_3 + 10\ H_2O$. Mol. weight, 286.

Soda ash is commercial sodium carbonate. It is sold in various strengths, 48°, 52°, 56°, and 58°. Each degree corresponds to 1 per cent. of sodium oxide.

Ten gallons of water dissolve at :—

32°	50°	59°	68°	86°	90·5°	93° and 174°	212° F.
7·1	12·6	16·5	21·4	38·1	59	46·2	45·1

lbs. of pure sodium carbonate.

Soda ash, 58°, contains 98 to 99 per cent. of sodium carbonate.

SPECIFIC GRAVITY OF SOLUTIONS OF SODIUM CARBONATE AT 15° C. (LUNGE).

Specific Gravity.	Degrees Beaumé.	Degrees Tw.	Per cent. by weight.	
			Na_2CO_3.	Na_2CO_3 + 10 aq.
1·007	1	1·4	0·67	1·807
1·014	2	2·8	1·33	3·587
1·022	3	4·4	2·09	5·637
1·029	4	5·8	2·76	7·444
1·036	5	7·2	3·43	9·251
1·045	6	9·0	4·29	11·570
1·052	7	10·4	4·94	13·323
1·060	8	12·0	5·71	15·400
1·067	9	13·4	6·37	17·180
1·075	10	15·0	7·12	19·203
1·083	11	16·6	7·88	21·252
1·091	12	18·2	8·62	23·248
1·100	13	20·0	9·43	25·432
1·108	14	21·6	10·19	27·482
1·116	15	23·2	10·95	29·532
1·125	16	25·0	11·81	31·851
1·134	17	26·8	12·61	34·009
1·142	18	28·4	13·16	35·493
1·152	19	30·4	14·24	38·405

Impurities.—Iron, sulphides, sodium chloride, sodium sulphate.

Soda ash is extensively used in the boiling of cotton goods, in dyeing with the substantive and the sulphur dyestuffs, and for neutralising. Price, 58 per cent., £4 per ton.

Sodium Chlorate.

$NaClO_3$. Mol. weight, 106·5.

One part of sodium chlorate is soluble in 1 part of cold, or in ⅓ part of hot water. It is more readily soluble than the potassium salt, in place of which it may be used. Price, 3½*d.* per lb.

Sodium Chloride or Common Salt.

$NaCl$. Mol. weight, 58·5.

Sodium chloride is chiefly used in dyeing with the substantive

dyestuffs, the Eosines, the sulphur dyestuffs, and in the preparation of sodium hypochlorite by electrolysis.

The temperature of the water has practically no influence on the solubility of common salt.

Impurities.—Magnesium chloride, sodium sulphate, calcium sulphate.

SPECIFIC GRAVITY OF SOLUTIONS OF SODIUM CHLORIDE AT 15° C. (GERLACH).

Specific Gravity.	Degrees Tw.	*NaCl.* per cent.
1·00725	1·6	1
1·01450	2·9	2
1·02174	4·3	3
1·02899	5·8	4
1·03624	7·2	5
1·04366	8·7	6
1·05108	10·2	7
1·05851	11·7	8
1·06593	13·2	9
1·07335	14·6	10
1·08097	16·2	11
1·08859	17·7	12
1·09622	19·2	13
1·10384	20·8	14
1·11146	22·3	15
1·11938	23·9	16
1·12730	25·4	17
1·13523	27·0	18
1·14315	28·6	19
1·15107	30·2	20
1·15931	31·8	21
1·16755	33·5	22
1·17580	35·1	23
1·18404	36·8	24
1·19228	38·4	25
1·20098	40·2	26
1·20433	40·8	26·395
		Saturated.

Price 19*s.* per ton.

Sodium Ferricyanide.

$Na_6Fe_2(CN)_{12} + H_2O$. Mol. weight, 579·8.

Sodium Ferrocyanide.

$Na_8Fe_2(CN)_{12} + H_2O$. Mol. weight, 625·8.

Sodium ferricyanide and ferrocyanide may be used in place of the corresponding potassium salts. Price, 3*d.* per lb.

Sodium Hydrate, v. Sodium Hydroxide.

Sodium Hydrosulphite.

$Na_2S_2O_4$. Mol. weight, 174.

Sodium hydrosulphite is chiefly used in dyeing the vat-dyestuffs and in the preparation of the hydrosulphite indigo vat. It is prepared by reducing sodium bisulphite with zinc-dust. See "Hydrosulphite Vat."

Hydrosulphite conc. B.A.S.F., powder, and Hydrosulphite conc., powder, M.L.B., are anhydrous sodium hydrosulphites. They are readily soluble in water, fairly stable in alkaline solutions, but they decompose rapidly in neutral solution and on exposure to air.

Where vat dyestuffs are regularly used, it is advisable to order the supply of hydrosulphite packed in tins of such a size that the whole contents of a tin can be used up in one day.

Hydrosulphite exposed to the air in contact with cotton or paper readily takes fire.

Sodium hydrosulphite is an excellent stripping agent.

See also "Sodium Sulphoxylate-formaldehyde."

Sodium Hydroxide,—Caustic Soda or Sodium Hydrate.

$NaOH$. Mol. weight, 40.

Two parts of cold water or ½ part of boiling water dissolve 1 part of caustic soda.

In commerce, caustic soda is sold as 48°, 60°, 70°, 74°, 76°, 77°. Each degree represents 1 per cent of sodium oxide.

Impurities.—Caustic soda may contain soda, Glauber's salt and common salt, the presence of which, if the specific gravity is ascertained by means of the hydrometer, will give unreliable results. Strong (90° Tw.) caustic soda also sometimes contains ferrates, aluminates and manganates.

Caustic soda is very largely used in the boiling of cotton, in mercerising, in dissolving of beta-naphthol, etc., in indigo dyeing and in the manufacture of soap. Price, 78 per cent., £10 15*s.* per ton.

SPECIFIC GRAVITY OF CAUSTIC SODA LYE AT 59° F. (LUNGE).

Degrees Beaumé.	Degrees Tw.	Specific Gravity.	Per cent. *NaOH.*	Degrees Beaumé.	Degrees Tw.	Specific Gravity.	Per cent. *NaOH.*
1	1·4	1·007	0·61	26	44·0	1·220	19·58
2	2·8	1·014	1·20	27	46·2	1·231	20·59
3	4·4	1·022	2·00	28	48·2	1·241	21·42
4	5·8	1·029	2·71	29	50·4	1·252	22·64
5	7·4	1·036	3·35	30	52·6	1·263	23·67
6	9·0	1·045	4·00	31	54·8	1·274	24·81
7	10·4	1·052	4·64	32	57·0	1·285	25·80
8	12·0	1·060	5·29	33	59·4	1·297	26·83
9	13·4	1·067	5·87	34	61·6	1·308	27·80
10	15·0	1·075	6·55	35	64·0	1·320	28·83
11	16·6	1·083	7·31	36	66·4	1·332	29·93
12	18·2	1·091	8·00	37	69·0	1·345	31·22
13	20·0	1·100	8·68	38	71·4	1·357	32·47
14	21·6	1·108	9·42	39	74·0	1·370	33·69
15	23·2	1·116	10·06	40	76·6	1·383	34·96
16	25·0	1·125	10·97	41	79·4	1·397	36·25
17	26·8	1·134	11·84	42	82·0	1·410	37·47
18	28·4	1·142	12·64	43	84·8	1·424	38·80
19	30·4	1·152	13·55	44	87·6	1·438	39·99
20	32·4	1·162	14·37	45	90·6	1·453	41·41
21	34·2	1·171	15·13	46	93·6	1·468	42·83
22	36·0	1·180	15·91	47	96·6	1·483	44·38
23	38·0	1·190	16·77	48	99·6	1·498	46·15
24	40·0	1·200	17·67	49	102·8	1·514	47·60
25	42·0	1·210	18·58	50	106·0	1·530	49·02

Sodium Hypochlorite,—Chloride of Soda or Eau de Labaraque. *NaOCl.* Mol. weight, 74·5.

A solution of sodium hypochlorite of 6° to 7° Tw., may be prepared in the following manner:—Mix 100 lbs. of bleaching powder with about 40 gallons of water. Dissolve 60 lbs. of soda (98 per cent. Na_2CO_3) in about 20 gallons of hot water and add about 10 gallons of cold water. Add the soda solution to the bleaching powder paste and stir for about ½ hour. Allow to settle for about 12 hours, draw off the clear solution, wash the precipitate with cold water 3 to 4 times, and add the clear wash-water to the hypochlorite solution which, when diluted to about

150 gallons, will show a specific gravity of 6° to 7° Tw. 1 to 2 lbs. of soda ash added to this solution will precipitate the remaining lime. The solution should react slightly alkaline.

Sodium hypochlorite may also be prepared by the electrolysis of a solution of common salt or by passing chlorine gas into caustic soda lye, which must be kept at a low temperature in order to prevent loss owing to the formation of chlorates.

Sodium Nitrite.

$NaNO_2$ Mol. weight, 69.

The commercial sodium nitrite usually contains from 92 to 98 per cent. of $NaNO_2$. It is used for diazotising. Price, 96 to 98 per cent., £26 per ton.

Sodium Peroxide or Oxygen Powder.

Na_2O_2. Mol. weight, 78.

Sodium peroxide dissolves in water with liberation of oxygen. If the water is acidulated, hydrogen peroxide is formed, but no oxygen is evolved.

Paper or cotton are set alight if sodium peroxide is spilt on to them, and care has, therefore, to be taken not to allow it to come into contact with organic matter.

Sodium peroxide may be used as a bleaching agent. It is, however, too costly for bleaching ordinary cotton goods. Price, 1*s*. per lb.

Sodium Perborate.

$NaBO_3 + 4\ H_2O$. Mol. weight, 154.

Sodium perborate is a very powerful bleaching agent. See "Bleaching." Price, 1*s*. 9*d*. per lb.

Sodium Phosphate or Phosphate of Soda.

$Na_2HPO_4 + 12\ H_2O$. Mol. weight, 358.

Thirty-five parts of cold or 1 part of hot water dissolve 1 part of sodium phosphate.

It is used in dyeing the direct cotton dyestuffs and for the fixing of aluminium mordants in the dyeing of Alizarine red. Price, £9 10*s*. per ton.

Sodium Silicate,—Soluble Glass,—Silicate of Soda or Sodium Tetrasilicate.

$Na_2Si_4O_9$. Mol. weight, 303.

Sodium silicate is supplied as a solution of 70° to 140° Tw.

It acts as a mild alkali, and is used in the boiling of cotton goods and for fixing chromium and iron mordants. Price, 100° Tw., £3 17*s.* 6*d.*

Sodium Stannate, v. Stannate of Soda.

Stannate of Soda,—Sodium Stannate or Preparing Salt.
$Na_2\ SnO_3$. Mol. weight, 213.

Stannate of soda is used as a mordant especially for Eosines, Cotton Blues, etc. Stannic hydroxide is fixed on the fibres by impregnating the goods with a solution of stannate of soda and by passing them afterwards through weak sulphuric acid. Price, 40 per cent., £4 per cwt.

Sodium Sulphate.
Na_2SO_4. Mol. weight, 142.

Glauber's Salt.
$Na_2SO_4 + 10\ H_2O$. Mol. weight, 322.

SPECIFIC GRAVITY OF SOLUTIONS OF SODIUM SULPHATE AT 19° C. (66·2° F.) (SCHIFF).

Sp. Gr.	Degrees Tw.	$Na_2SO_4 . 10H_2O$ per cent.	Calcined Na_2SO_4 per cent.	Sp. Gr.	Degrees Tw.	$Na_2SO_4 . 10H_2O$ per cent.	Calcined Na_2SO_4 per cent.
1·0040	0·8	1	0·441	1·0642	12·8	16	7·056
1·0079	1·6	2	0·881	1·0683	13·7	17	7·497
1·0118	2·4	3	1·323	1·0725	14·5	18	7·938
1·0158	3·2	4	1·764	1·0766	15·3	19	8·379
1·0198	3·9	5	2·205	1·0807	16·1	20	8·820
1·0238	4·8	6	2·646	1·0849	17·0	21	9·261
1·0278	5·6	7	3·087	1·0890	17·8	22	9·702
1·0318	6·4	8	3·528	1·0931	18·6	23	10·143
1·0358	7·2	9	3·969	1·0973	19·5	24	10·584
1·0398	8·0	10	4·410	1·1015	20·3	25	11·025
1·0439	8·8	11	4·851	1·1057	21·1	26	11·466
1·0479	9·6	12	5·292	1·1100	22·0	27	11·907
1·0520	10·4	13	5·373	1·1142	22·8	28	12·348
1·0560	11·2	14	6·174	1·1184	23·7	29	12·789
1·0601	12·0	15	6·615	1·1226	24·5	30	13·230

Ten gallons of water dissolve at :—

32°	50°	59°	68°	77°	86°	91·5°	104°	217·5° F.
5	9	13	19	28	40	50	49	42·6

lbs. of calcined Glauber's salt.

220 parts of crystallised sodium sulphate are equal to 100 parts of calcined sodium sulphate. Sodium sulphate is chiefly used as addition to the dye-bath in dyeing the direct cotton, the sulphur, and the vat dyestuffs. Price, £2 per ton.

Impurity.—Sodium chloride.

Sodium Sulphide.

$Na_2S + 9\ H_2O$. Mol. weight, 240.

Sodium sulphide is readily soluble in water. One part of the concentrated product is equal to 2 parts of sodium sulphide crystals. It is used in the preparation of copper sulphide, but chiefly for dissolving the sulphur dyestuffs.

If stored for too long a time it decomposes, sodium sulphate and carbonate being formed. Price, concentrated, £8 per ton; crystallised, £5 10*s*. per ton.

Sodium Sulphoxylate-Formaldehyde.

Hyraldite (Cassella) is a stable formaldehyde compound of hydrosulphite.

Hyraldite for stripping (Cassella) and *Decroline* (B.A.S.F.), are specially used for stripping colours. The following method is recommended :—

The temperature of the stripping bath should be from 105° to 120° F. Enter the goods, raise gradually to the boil during ½ to ¾ hour, boil for 20 to 30 minutes, rinse thoroughly, neutralise, if necessary, and finally rinse well.

For 100 lbs. of material to be stripped use 2 to 4 lbs. of *Hyraldite for stripping*, 2½ to 5½ lbs. of formic acid, 85 per cent., or 1½ to 2½ lbs. of sulphuric acid.

Hydrosulphite NF extra (Meister Lucius and Brüning) and *Rongalite C* (Badische Anilin und Soda Fabrik), also belong to the formaldehyde compounds of sodium sulphoxylate. Price, 2*s*. per lb.

Hydrosulphite A. Z. (*MLB*), is a basic zinc-hydrosulphite-formaldehyde compound, chiefly used for stripping.

See also "Sodium Hydrosulphite."

Sodium Tetrasilicate, v. Sodium Silicate.

Sodium Thiosulphate,—Hyposulphite of Soda or Antichlor.
$Na_2S_2O_3 + 5\ H_2O$. Mol. weight, 248.

Sodium thiosulphate is used as an antichlor after bleaching with a hypochlorite. Price, £5 10*s*. per ton.

Sodium Tungstate.
$Na_2WO_4 + 2\ H_2O$. Mol. weight, 330.

Sodium tungstate is applied to cotton fabrics in order to render them non-inflammable.

Soluble Glass, v. Sodium Silicate.

Soluble Oil, v. Turkey-red Oil.

Spirits of Salt, v. Hydrochloric Acid.

Stannic Chloride or Oxymuriate of Tin.
$SnCl_4$. Mol. weight, 260·8.

Stannic chloride is used for mordanting cotton which has to be dyed brilliant shades with basic and other dyestuffs.

Pink Salt.
$SnCl_4 + 2\ NH_4Cl$. Mol. weight, 367·8.

Pink salt has been formerly employed in place of stannic chloride.

See also *Cotton Spirits and Tin Spirits.*

Stannous Chloride,—Tin Crystals or Tin Salt.
$SnCl_2 + 2\ H_2O$. Mol. weight, 225·9.

Stannous chloride is chiefly used in the preparation of tin mordants and for brightening Turkey-red.

Sulphated Oil, v. Turkey-red Oil.

Sugar of Lead, v. Lead Acetate.

Sulphuric Acid or Oil of Vitriol.
H_2SO_4. Mol. weight, 98.

The weakest sulphuric acid is the so-called *chamber acid,* which has a specific gravity of 1·50 to 1·60, whilst the acid known as *brown oil of vitriol* (B.O.V.) has a specific gravity of about 1·70.

The concentrated acid known in commerce as *oil of vitriol* (O.V.), or *double oil of vitriol* (D.O.V.), is obtained by further concentration of the B.O.V. When mixing sulphuric acid and

SPECIFIC GRAVITY OF SOLUTIONS OF TIN CRYSTALS AT 15° C. (GERLACH).

Sp. Gr.	Degrees Tw.	$SnCl_2 . 2 H_2O$ per cent.	Sp. Gr.	Degrees Tw.	$SnCl_2 . 2 H_2O$ per cent.
1·013	2·6	2	1·330	66·0	40
1·026	5·2	4	1·352	70·4	42
1·040	8·0	6	1·374	74·8	44
1·054	10·8	8	1·397	79·4	46
1·068	13·6	10	1·421	84·2	48
1·083	16·6	12	1·445	89·0	50
1·097	19·4	14	1·471	94·2	52
1·113	22·6	16	1·497	99·4	54
1·128	25·6	18	1·525	105·0	56
1·144	28·8	20	1·554	110·8	58
1·161	32·2	22	1·582	116·4	60
1·177	35·4	24	1·613	122·6	62
1·194	38·8	26	1·644	128·8	64
1·212	42·4	28	1·677	135·4	66
1·230	46·0	30	1·711	142·2	68
1·249	49·8	32	1·745	149·0	70
1·268	53·6	34	1·783	196·6	72
1·288	57·6	36	1·821	164·2	74
1·309	61·8	38	1·840	168·0	75

Price, 1*s.* 0½*d.* per lb.

water the acid should always be allowed to flow in a thin stream into the cold water with continuous stirring.

Impurities.—Lead, iron, arsenic, sulphur dioxide, nitrous gases and selenium.

Sulphuric acid is chiefly used in bleaching.

Price, 168° Tw., £3 2*s.* 6*d.* per ton.

Sumach, v. Tannins.

Sumach Extract, v. Tannins.

Tannins.

The tannins are readily absorbed by the vegetable fibres. They are capable of forming insoluble compounds with antimony and with the heavy metals.

Basic coal tar colours are precipitated by the tannins. They are, therefore, chiefly employed as mordants for these dyestuffs.

Specific Gravity of Sulphuric Acid (Lunge and Isler).

Specific Gravity at 60° F.	Degrees Tw.	100 lbs. contain H_2SO_4.	1 gallon contains H_2SO_4.	Specific Gravity at 60° F.	Degrees Tw.	100 lbs. contain H_2SO_4.	1 gallon contains H_2SO_4.
		lbs.	lbs.			lbs.	lbs.
1·005	1	0·83	0·08	1·450	90	55·03	7·98
1·010	2	1·57	0·16	1·460	92	55·97	8·17
1·020	4	3·03	0·31	1·470	94	56·90	8·37
1·030	6	4·49	0·46	1·480	96	57·83	8·56
1·040	8	5·96	0·62	1·490	98	58·74	8·76
1·050	10	7·37	0·77	1·500	100	59·70	8·96
1·060	12	8·77	0·85	1·510	102	60·65	9·16
1·070	14	10·19	1·09	1·520	104	61·59	9·36
1·080	16	11·60	1·25	1·530	106	62·53	9·57
1·090	18	12·99	1·42	1·540	108	63·43	9·77
1·100	20	14·35	1·58	1·550	110	64·26	9·96
1·110	22	15·71	1·75	1·560	112	65·08	10·15
1·120	24	17·01	1·91	1·570	114	65·90	10·35
1·130	26	18·31	2·07	1·580	116	66·71	10·54
1·140	28	19·61	2·23	1·590	118	67·59	10·75
1·150	30	20·91	2·39	1·600	120	68·51	10·96
1·160	32	22·19	2·57	1·610	122	69·43	11·18
1·170	34	23·47	2·75	1·620	124	70·32	11·39
1·180	36	24·76	2·92	1·630	126	71·16	11·60
1·190	38	26·04	3·10	1·640	128	71·99	11·81
1·200	40	27·32	3·28	1·650	130	72·82	12·02
1·210	42	28·58	3·46	1·660	132	73·64	12·22
1·220	44	29·84	3·64	1·670	134	74·51	12·44
1·230	46	31·11	3·82	1·680	136	75·42	12·67
1·240	48	32·28	4·00	1·690	138	76·30	12·89
1·250	50	33·43	4·18	1·700	140	77·17	13·12
1·260	52	34·57	4·35	1·710	142	78·04	13·34
1·270	54	35·71	4·54	1·720	144	78·92	13·57
1·280	56	36·87	4·72	1·730	146	79·80	13·81
1·290	58	38·03	4·90	1·740	148	80·68	14·04
1·300	60	39·19	5·09	1·750	150	81·56	14·27
1·310	62	40·35	5·28	1·760	152	82·44	14·51
1·320	64	41·50	5·48	1·770	154	83·32	14·75
1·330	66	42·66	5·67	1·780	156	84·50	15·04
1·340	68	43·74	5·86	1·790	158	85·70	15·34
1·350	70	44·82	6·05	1·800	160	86·90	15·64
1·360	72	45·88	6·24	1·805	161	87·60	15·81
1·370	74	46·94	6·43	1·810	162	88·30	15·98
1·380	76	48·00	6·62	1·815	163	89·05	16·21
1·390	78	49·06	6·82	1·820	164	90·05	16·39
1·400	80	50·11	7·02	1·825	165	91·00	16·61
1·410	82	51·15	7·21	1·830	166	92·10	16·85
1·420	84	52·15	7·40	1·835	167	93·48	17·13
1·430	86	53·11	7·59	1·840	168	95·60	17·59
1·440	88	54·07	7·79	1·8415	168·3	97·70	17·99

Tannic Acid,—Tannin,—Gallo-tannic Acid.

$C_{14}H_{10}O_9 + 2\,H_2O$. Mol. weight, 358.

Tannic acid is readily soluble in hot water. It is the purest form of tannin, and is, therefore, used in mordanting cotton which has to be dyed in brilliant shades with the basic dyestuffs. Price, 82 per cent., 1*s*. per lb.

SPECIFIC GRAVITY OF SOLUTIONS OF TANNIC ACID AT 15° C. (59° F.) (TRAMMER).

Specific Gravity.	Tannic Acid. Per cent.	Specific Gravity.	Tannic Acid. Per cent.	Specific Gravity.	Tannic Acid. Per cent.
1·0040	1·0	1·0108	2·7	1·0176	4·4
1·0044	1·1	1·0112	2·8	1·0180	4·5
1·0048	1·2	1·0116	2·9	1·0184	4·6
1·0052	1·3	1·0120	3·0	1·0188	4·7
1·0060	1·4	1·0124	3·1	1·0192	4·8
1·0060	1·5	1·0128	3·2	1·0196	4·9
1·0064	1·6	1·0132	3·3	1·0200	5·0
1·0068	1·7	1·0136	3·4	1·0242	6·0
1·0072	1·8	1·0140	3·5	1·0324	8·0
1·0076	1·9	1·0144	3·6	1·0406	10·0
1·0080	2·0	1·0148	3·7	1·0489	12·0
1·0084	2·1	1·0152	3·8	1·0572	14·0
1·0088	2·2	1·0156	3·9	1·0656	16·0
1·0092	2·3	1·0160	4·0	1·0740	18·0
1·0096	2·4	1·0164	4·1	1·0824	20·0
1·0100	2·5	1·0168	4·2		
1·0104	2·6	1·0172	4·3		

Sumach.

Sumach contains gallo-tannic acid. It is sold as leaves or as powder; the former quality is usually the purer.

When sumach is used in place of tannic acid in mordanting, the cotton is tinted brownish and the shades obtained on this mordant are, therefore, not as brilliant as those produced on a purer tannic acid mordant. Four to 5 parts of sumach leaves are about equivalent to 1 part of tannic acid. Price, fine ground 9*s*. to 10*s*. per cwt.

Sumach Extract.

Sumach extract is sold both as a liquid of about 53° Tw. and also in the solid form. Some of these extracts give very pure shades.

About 2¼ parts of sumach extract correspond to 1 part of tannic acid. Price, 12*s*. to 18*s*. per cwt.

Oak Galls,—Nut Galls,—Chinese Galls or Japanese Galls.

Galls contain from 50 to 70 per cent. of tannic acid. Next to tannic acid, galls are the best tannin mordant.

About 1½ parts of galls are used in place of 1 part of pure tannic acid.

Myrabolans.

Myrabolans are hard nuts, the peel of which contains the tannin.

About 3 parts of myrabolans are used in place of 1 part of tannic acid. Price, 7*s*. 6*d*. to 10*s*. per cwt.

Valonia.

Valonia (acorn cups) contains about 28 per cent. of tannic acid.

Divi-divi.

Divi-divi is similar to myrabolans, and contains about 25 per cent. of tannic acid. Price, 8*s*. to 12*s*. per cwt.

Catechu, v. Natural Dyestuffs.

Tartaric Acid.

$C_2H_2(OH)_2(COOH)_2$. Mol. weight, 150.

Tartaric acid is used for impregnating mercerised cotton dyed with the substantive dyestuffs in order to produce the "scroop," characteristic of silk. It is generally employed in conjunction with sodium acetate.

The dyed yarn is first treated in a weak solution of soap, then hydroextracted, and finally passed through a solution containing 1 to 4 lbs. of tartaric acid and 5 to 10 lbs. of sodium acetate per 100 gallons, hydroextracted and dried. 5 to 10 lbs. of acetic acid may be used in place of the tartaric acid. Price, 1*s*. 1*d*. per lb.

Tartar Emetic, v. Double Tartrate of Antimony and Potassium.

Tin Crystals, v. Stannous Chloride.

Tin Salt, v. Stannous Chloride.

Tin Spirits, v. Cotton Spirits.

Titanium Tanno-Oxalate.

Titanium tanno-oxalate has been suggested by J. Barnes for the mordanting of cotton. The cotton is steeped in the solution (1° to 2° Tw.) for some minutes, wrung and treated with a hot solution of common salt. The titanium tannate acts as a mordant for the basic dyestuffs.

Titanous Salts.

Titanous salts act as powerful stripping agents. The azo dyes, especially when dyed on cotton, are readily destroyed by solutions of these salts. Price, *Titanous chloride*, £4 per cwt.

Tolidine.

$H_2N.\ C_7H_6.\ C_7H_6.\ NH_2$. Mol. weight, 212.

Tolidine, like benzidine, may be used in the production of insoluble azo-colours on the fibre.

Tournante Oil,—Huile tournante or Gallipoli Oil.

Tournante oil is olive oil which has turned rancid, either naturally or by artificial means.

It is used in the process of oiling in Turkey-red dyeing. Emulsions of this oil are very readily absorbed by the cotton fibre.

Turkey-red Oil,—Soluble Oil,—Oleïn or Alizarine Oil.

Turkey-red oil is chiefly produced by the action of sulphuric acid on castor oil; other oils, such as cotton-seed oil and olive oil may, however, also be used for this purpose. It should react slightly alkaline, and it ought to be perfectly soluble in water to which a few drops of ammonia have been added.

Preparation of Turkey-red Oil.—100 lbs. of castor oil are run slowly in a thin stream into 30 lbs. of sulphuric acid, 168° Tw., with continuous stirring. The temperature of the mixture must not be allowed to rise above 35° C. Allow the mixture to stand for about 24 hours, wash with a solution of common salt or Glauber's salt, allow to settle and remove the wash water. The oil is finally neutralised with ammonia or with soda and diluted with water. The finished product usually contains about 50 per cent. of fatty matter.

The following is another method:—

Very slowly run 8 lbs. of sulphuric acid, 168° Tw., into 48 lbs.

of castor oil, whilst continuously stirring. Cool if necessary. Allow to stand for about 36 hours, during which time the mixture should be stirred from time to time. Mix thoroughly with a large quantity of water and add about 20 lbs. of common salt (solid). Stir and allow to stand for some time. The Turkey-red oil will soon rise to the top. Syphon off and neutralise the oil with ammonia or soda.

Turkey-red oil is largely used in the oiling of cotton for dyeing Turkey-red. It is fixed on the fibre in a much shorter time than olive oil (tournante oil).

It is also employed as an addition to the dyebath in dyeing with the direct cotton dyestuffs, as a mordant for some of the basic dyestuffs, in cop dyeing, in the so-called "foam dyeing" of cheeses and cotton hanks, as an addition to the tannin bath in mordanting, and in the wetting out of cotton previous to dyeing. Price, 45 per cent., 17*s*. 6*d*. per cwt.

Valonia, v. Tannins.

Wilson's Bleaching Liquor, v. Aluminium Hypochlorite.

Zinc Acetate.

$Zn\ (C_2H_3O_2)_2 + 3\ H_2O$. Mol. weight, 237·4.

Henry Schmid recommends zinc acetate for fixing tannins in place of tartar emetic.

Zinc Dust or Zinc Powder.

Zinc dust is finely-divided zinc. It always contains a small quantity of zinc oxide. It is a strong reducing agent, and is chiefly employed in indigo dyeing and in the preparation of hydrosulphite. Price, £29 10*s*. per ton.

PART IV

BLEACHING

THE cotton fibre in the raw state contains impurities such as "cotton wax," colouring matter, pectic matters, etc. Further impurities (starch, flour, fatty matter, China clay) are added during the different processes of spinning, sizing, and weaving. It is the object of bleaching to destroy all these impurities, *i.e.*, to decolourise the colouring matters and to remove the other substances.

The operation of bleaching may be divided into two distinct parts:—(1) The boiling of the material, the object of which is to soften and to saponify certain impurities, which are then partly removed in the washing. (2) The bleaching proper, *i.e.*, the treatment of the material with the bleaching agent, during which operation the colouring matters are destroyed by oxidation.

PREPARATION OF THE BLEACHING LIQUOR.

The Preparation of a Solution of Bleaching Powder.

The bleaching powder solution used in bleaching should be perfectly clear and free from any suspended particles. In order to dissolve the powder and to break up the lumps, it should first be made into a thick uniform paste by mixing it thoroughly with a small quantity of water. This may be done in a small tank provided with a powerful agitator, or the bleaching powder may be ground together with a small quantity of water between a pair of mill-stones. The paste thus produced should then be run into a larger tank provided with agitators, in which it is thoroughly stirred with a larger quantity of water. 150 to 200 gallons of water are generally used to dissolve 1 cwt. of bleaching powder. After the liquor has been stirred for some hours, it is allowed to settle, usually overnight, the clear liquor being syphoned off in the morning. The mud remaining in the tanks should be washed once or twice with water, in order to extract all the

bleaching powder. The liquor thus obtained may be used for dissolving a fresh quantity of the powder.

A very simple *Apparatus for Dissolving Bleaching Powder* is shown in Fig. 13. It consists of the lead-lined iron trough containing the water, in which revolves the perforated drum A. The

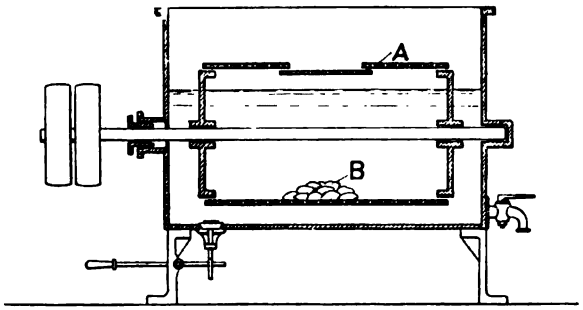

FIG. 13.—Apparatus for Dissolving Bleaching Powder.

bleaching powder is introduced through a man-hole. A few stones B are placed in the drum in order to grind the powder and to accelerate the dissolving.

A very effective *Stirring Arrangement for Dissolving Bleaching Powder* is shown in Fig. 14 (taken from *Apparate, etc., der Wäscherei, Bleicherei, Färberei,* by Julius Zipser). The two

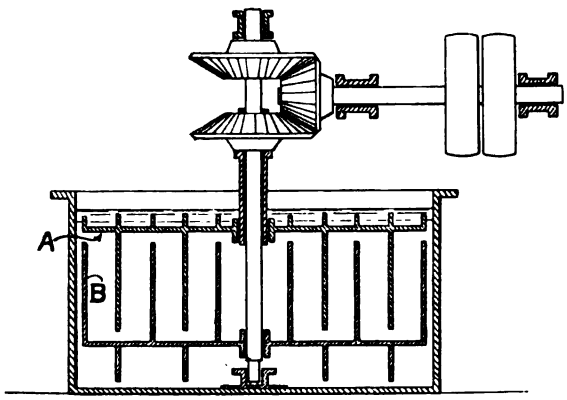

FIG. 14.—Stirring Arrangement for Dissolving Bleaching Powder.

stirrers A and B revolve in opposite directions, thus breaking up the lumps of bleaching powder very effectively.

The Preparation of Sodium Hypochlorite.

Sodium hypochlorite may be prepared (*a*) by the double decomposition of sodium carbonate and bleaching powder; (*b*) by electrolysing a solution of common salt; and (*c*) by passing chlorine gas into caustic soda lye.

A very convenient arrangement (shown in Fig. 15) for preparing sodium hypochlorite from bleaching powder and sodium carbonate

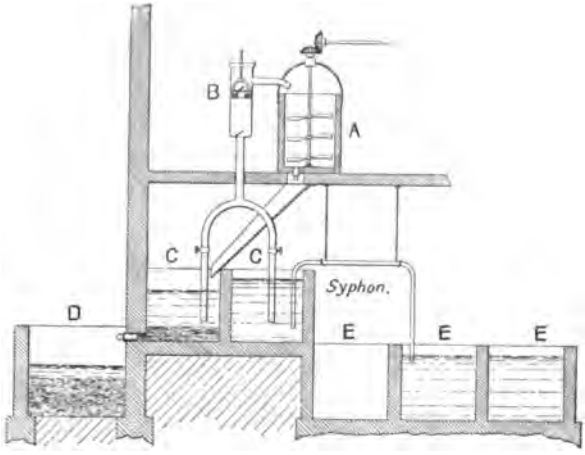

FIG. 15.—Tailfer's Apparatus for the Preparation of Sodium Hypochlorite.

is described by L. Tailfer, in *The Bleaching of Linen and Cotton Yarn and Fabrics* (Scott, Greenwood & Co.). The tanks are made of brickwork lined with cement. 100 kilos. of bleaching powder are mixed by means of a stirrer with a small quantity of water in tank A, and 55 kilos. of sodium carbonate are dissolved in one of the tanks C. When the bleaching powder has been mixed with the water for about two hours, it is run into tank C through a metal sieve. The tank is now filled to the desired height with wash-water from the other tank C. After the whole has been thoroughly stirred, the liquor is allowed to settle overnight. The clear liquor is now syphoned into one of the tanks E; the lime-mud in tank C is washed with water and allowed to settle.

The clear liquor is pumped by means of pump B into tank A, and used for dissolving a fresh quantity of bleaching powder. The lime-mud is ultimately discharged into tank D.

The Preparation of Electrolytic Bleaching Liquor.

One of the first to use electrolysis in the preparation of bleaching liquor was Eugene Hermite. Among other eminent investigators who followed him may be mentioned Dr. Karl Kellner, Stepanoff, Vogelsang, Schoop, Schuckert, and Dr. Oettel. In a paper read by E. Reuss,[1] much useful information will be found as regards the history and the construction of the different electrolysers. When a solution of common salt is electrolysed the positive pole (anode) gives off chlorine and hydroxyl, whilst the negative pole (cathode) gives off sodium and hydrogen. In the types of electrolysers generally employed in bleach works, the products of the electrolytic decomposition are allowed to combine in the electrolyser; thus the hypochlorous acid combines with the caustic soda to form sodium hypochlorite. The hydrogen evolved during electrolysing before it escapes reduces some of the hypochlorite produced, thus causing sometimes quite a considerable loss. The temperature best suited for electrolysing is from 20° to 25° C. At lower temperatures the resistance to the current is appreciably increased, whilst at higher temperatures the loss in hypochlorite becomes very marked, chlorate being formed. Two types of electrolysers are now chiefly used. In the first type, patented by Kellner, the electrodes are made of a platinum-iridium alloy, whilst in the second type, invented by Oettel, carbon electrodes are employed. Electrolysers based on the Kellner patents are built by Siemens, Bros. & Co., and by Mather and Platt.

The *Siemens Electrolyser* consists of flat tanks, divided into sections by vertically-arranged glass plates. In this manner a series of cells is formed through which the salt solution circulates horizontally in a zig-zag path. The electrodes are made of platinum-iridium wire net. They are arranged horizontally one above the other in such a manner that the anode lies below the cathode. The electrolyser has two current terminals, but no internal electrical connections. The working

[1] *Journ. Soc. Dyers and Colourists*, XXVII., p. 110, 1911.

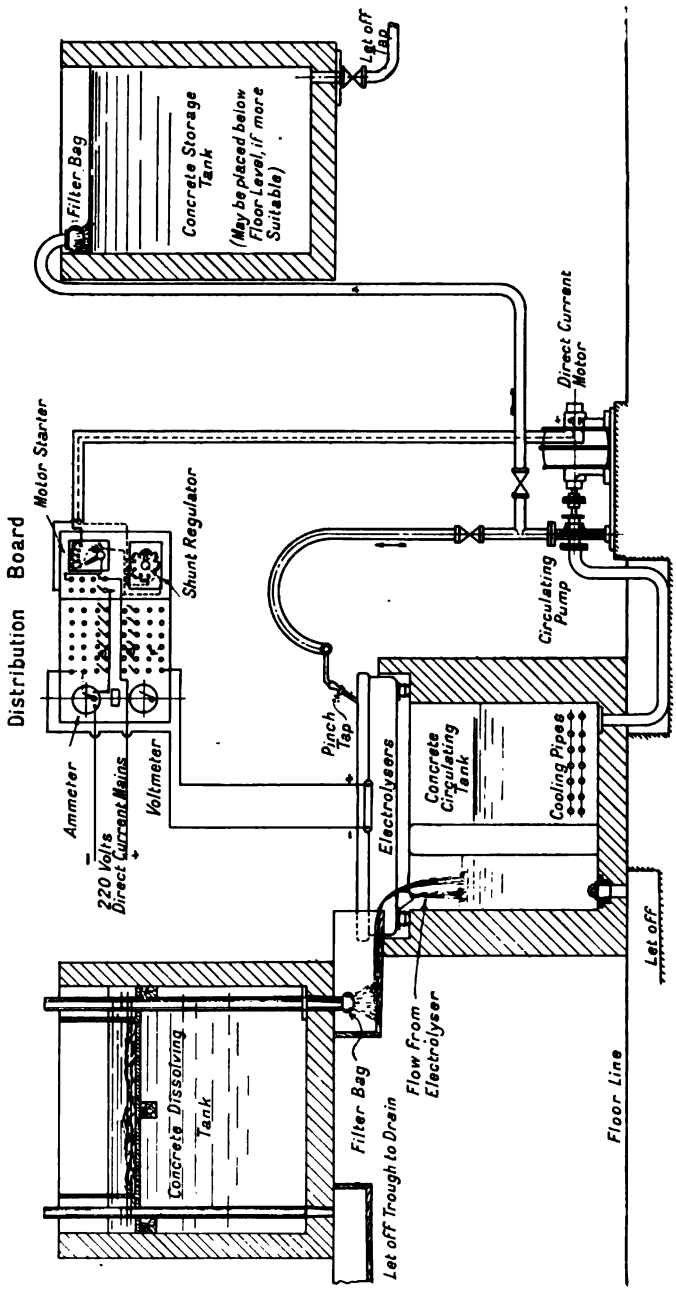

FIG. 16.—Electrolytic Plant for the Preparation of Sodium Hypochlorite.

of this electrolyser is similar to that shown in Fig. 16. A bleaching solution containing 25 grms. of active chlorine per litre is produced by electrolysing a salt solution containing 33 lbs. of salt in 22 gallons of water, at 23° C., for 10 hours.

An *Electrolytic Plant* of Mather and Platt is illustrated in Fig. 16. The electrolyser consists of 40 cells. The tank is made of vitrified porcelain fitted with rolled glass plates, glass packing plates, glass base, 39 intermediate platinum alloy electrodes, terminal platinum electrodes, and terminals for connecting the main cables at each end of the apparatus. The electrolyser being entirely made of glass and earthenware is not affected by the bleaching liquor. The electrodes are made of a special platinum alloy in the form of sleeves. When an installation contains more than one electrolyser the electrolysers are worked in parallel.

One electrolyser produces in one hour approximately $\frac{1}{2}$ kilo. of chlorine when working at 200 volts, and 0·6 to 0·75 kilos. of chlorine when working at 220 volts.

The other conditions being equal, the production of chlorine is proportionate to the time of electrolysing and to the number of electrolysers employed. The cost of producing the chlorine is approximately 8 K.W. hours of power and $8\frac{3}{4}$ kilos. of salt per kilo. of chlorine produced. The hypochlorite solution produced contains from 0·6 to 0·7 per cent. of available chlorine. The method of working the electrolyser is as follows. The salt is placed below water level, on a perforated wood board in the dissolving tank. By lifting the plug in the dissolving tank, the salt solution passes through a canvas bag, by means of which it is filtered, to the electrolyser, and from here to the circulating tank. By means of a small low-lift pump the circulation of the solution through the electrolyser is continued. When the bleach-liquor has acquired the necessary strength, the valve on the main between pump and electrolyser is closed, and the valve between the pump and the storage tank is opened. The electrolysed liquor is now pumped to the storage tank from which it is conducted to the bleachhouse. If more convenient, the storage tank may be placed below the floor level. A simple system of lead cooling pipes is usually installed in the circulating tank in order to allow working at the correct temperature.

A complete *Electrolytic Plant* of the Oettel type is shown in

Fig. 17, whilst the side view and a section of the apparatus, together with the refrigerating coils, is shown in Fig. 18. The electrolyser proper consists of a vat made of stoneware, which contains the carbon electrodes, having glass slips on the upper

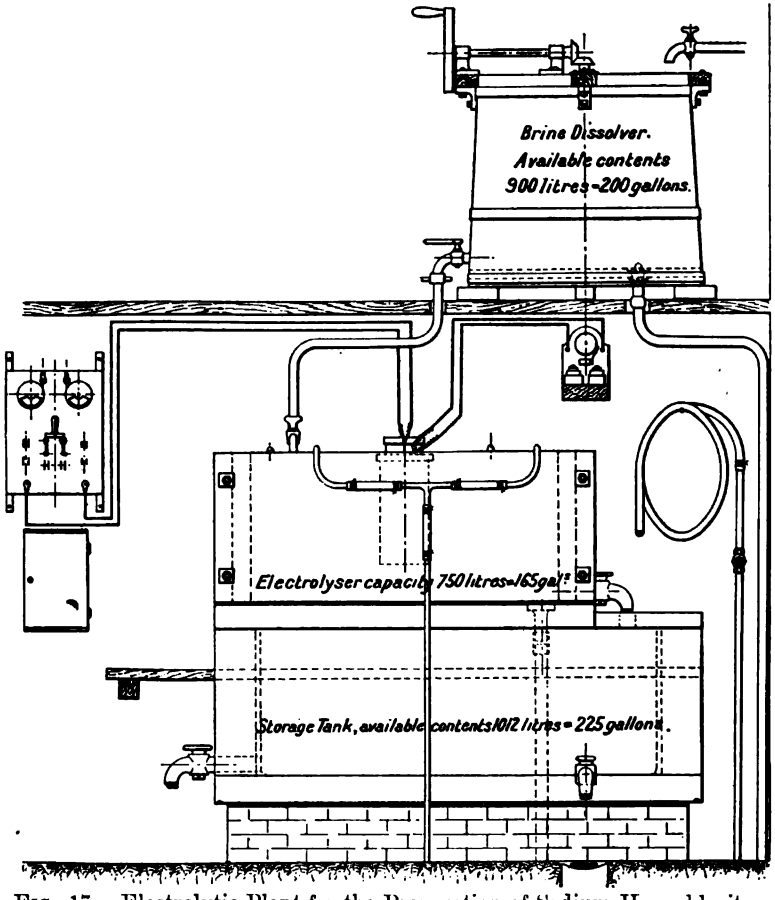

FIG. 17.—Electrolytic Plant for the Preparation of Sodium Hypochlorite.

and lower edges. The vat is placed into a stone tank, which is filled with the salt solution to within 4 inches from the top. The sides of the electrolyser are perforated on both sides near the top and the bottom of the electrodes, and in this manner communication between each chamber formed by the electrodes

and the outside is established. The liquor in the chambers of the electrolyser being lifted by the hydrogen evolved during electrolysis flows out through the holes near the top. It passes over side plates, where it is thoroughly mixed and cooled, into the outer tank. Before entering the holes near the bottom of the electrodes it is further cooled by means of the refrigerator coils placed in the outer vat. In this manner a continuous circulation of the liquor is obtained without the use of a pump. Oettels "Industrial" type of electrolyser, known as TE/3, holds 167 gallons of brine. A 15 per cent. salt solution is used. The apparatus works with about 110 volts continuous current, and 75 to 80 ampères. A solution of sodium hypochlorite, containing 14 grms. of available chlorine per litre, requires 10 hours

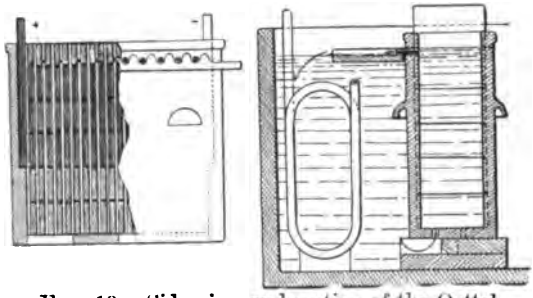

FIG. 18.—Side view and section of the Oettel Electrolyser.

electrolysing. This represents in power 88 units of electricity, or a total of 118 H.P., for a total of 10·5 kilos. (23 lbs.) of active chlorine.

In order to avoid decomposition of the electrolytic bleaching liquor it is advisable to use the liquor as soon as possible after it has been prepared. The presence of salt in the bleaching liquor accelerates the bleaching action and the entire absence of lime salts is also in favour of this method of bleaching. Less souring is, therefore, required. There can be no question as to the superiority of electrolytic bleaching liquor compared with bleaching powder solution when bleaching very high class materials, cops and cheeses in special apparatus, and artificial silk.

As regards the bleaching of ordinary cotton goods, it is chiefly

a question of cost of current and salt, and of the initial cost and the depreciation of the apparatus.

Liquid Chlorine is now largely manufactured on the Continent and used in the preparation of bleaching liquor by conducting the chlorine gas into milk of lime or by passing it into caustic soda lye. If the latter process is used, the bleaching liquor should not be allowed to become neutral but should always remain slightly alkaline, or decomposition will set in very rapidly.

Bleaching of Loose Cotton.

The greatest care has to be taken when bleaching loose cotton in order to avoid felting or matting and weakening of the fibres. The cotton is not boiled, but simply steeped in a warm solution of either caustic soda (2° to 2½° Tw.) or soda ash. It is then rinsed and bleached in a weak solution of bleaching powder, about 1° to 1½° Tw. After the cotton has been thoroughly washed, it is soured with sulphuric acid (1° to 1½° Tw.), and finally washed free from acid.

The bleaching of loose cotton may be carried out in troughs, or a machine of the "Obermaier" or the "Jagenburg" type, in which latter the cotton is slowly moved in the liquor, may be employed.

Except for the manufacture of cotton wool which is used for medical purposes, loose or raw cotton is but seldom bleached.

Bleaching of Cotton Sliver.

Cotton sliver is best bleached in special machines. The "packing system" is best suited for this purpose. The machines should be made either of phosphor-bronze or lined with lead.

The material is boiled with soda ash or with caustic soda, with or without the addition of Turkey-red oil, rinsed and bleached and soured in the usual manner.

The best results are obtained when sodium hypochlorite is used in place of bleaching powder.

Bleaching of Cops and Cheeses.

The bleaching of cops and cheeses presents, comparatively speaking, less difficulties than the dyeing of these materials. A

simple method consists in packing the material into wicker baskets or bags made of hemp which are placed into an ordinary bleaching kier in which they are boiled. They are then treated with the bleaching liquor, soured and washed.

Apparatus, such as the "Obermaier," are also used for the bleaching of cops. The material is tightly packed into the boxes and the different solutions are pressed through. In the employment of either of these methods it is preferable to use sodium hypochlorite (either prepared by electrolysis or as given on page 72) in place of bleaching powder. The cops are much more readily and more evenly penetrated, and on account of the absence of lime salts, less souring is required.

The apparatus used for bleaching are now frequently constructed of either nickel or "nickelin" (a nickel alloy).

If a "full bleach" is not required, the following method of "bleaching cold," recommended by Meister, Lucius and Brüning, may be used in special instances. Cops, cheeses, or yarn in the form of hanks are packed into an iron box specially constructed for the purpose. The spaces between the material are filled out with loose cotton. Bleaching powder solution at $1\frac{1}{2}^{\circ}$ Tw. is circulated through the material for 4 hours under a pressure of 22 to 30 lbs. Washing and souring with hydrochloric acid, 1° Tw., and final washing, concludes the bleaching operation.

F. Erban and L. Pick propose the use of a mixture of sodium hypochlorite and either Turkey-red oil or, better still, Monopole soap, for the bleaching of cops and cheeses.

Bleaching of Cotton Yarn and Warps.

Before bleaching, the hanks have to be laced; they are then made into chains of about 120 lbs., either by tying them together end to end or by linking them together. Warps may be chained by means of a machine having a motion similar to that of a crochet needle. In either case the chains are run over winches, like strands of cloth.

Less frequently hanks are bleached in 10-lb. bundles, in which case they are moved by hand.

The boiling may be conducted in either high or low-pressure kiers. Time required, from 5 to 10 hours. During boiling, the yarn should be covered in order to prevent it from coming into contact with the air. When the boiling has been completed, the

yarn is usually washed in the kier once or twice, first with hot and then with cold water. The yarn is now placed into cisterns, preferably made of stone (slate), provided with false bottoms, in which it is treated with the bleaching solution, washed and soured.

The strength of the liquors used in boiling, chemicking, etc., varies very considerably, according as to whether a "half bleach" or a "full bleach" is required.

In the following, average quantities are given:—

For 100 *lbs. of Yarn.*

Boiling.—5 to 10 hours, 3 to 5 lbs. of soda ash, or 2½ to 3½ lbs. of caustic soda. It is the practice in some works to use both soda ash (2 to 3 lbs.) and caustic soda (1½ to 2½ lbs.).

Washing.—Wash in the kier, first with hot water, then with cold water, and finally wash in the machine.

A slight souring and washing before bleaching will in many instances be of advantage, especially in the case of hard twisted or Egyptian yarns.

Bleaching.—Chemick in the cistern with bleaching powder solution, 1½° to 2½° Tw., 2 to 3 hours. The yarn may also be bleached for a short time on sticks. In this case the liquor is usually warmed up gradually so as to reach 100° to 120° F. at the end of an hour.

Washing.—Wash in the cistern for about 1 hour.

Souring.—Sour for 1 to 2 hours in the cistern with either sulphuric or hydrochloric acid at 1° to 2° Tw.

Washing.—Wash the yarn in the cistern and then in the machine. The yarn should be finally passed through a weak solution of soda or of soda and soap. The *blueing* may be done in this bath.

In order to obtain very good whites it may be necessary to repeat the chemicking and souring.

Egyptian yarn is nearly always bleached twice. In the first boil, caustic soda lye up to 2° Tw. may be used, whilst soda ash of about the same strength is employed in the second boil. If the yarn is used for dyeing, soda ash only should be used for boiling. Yarn which is boiled with caustic soda is apt to give uneven shades in dyeing.

O'Neil states that if the bleaching operation is properly

conducted both warp and weft yarns should show a greater tensile strength after bleaching.

Washing of Cotton Yarn.

The final operation consists in washing the yarn thoroughly. This may either be done by hand or in special *Yarn Washing Machines.* Among the oldest type of these are the *Wash Stocks,* in which the yarn is hammered by means of heavy wooden

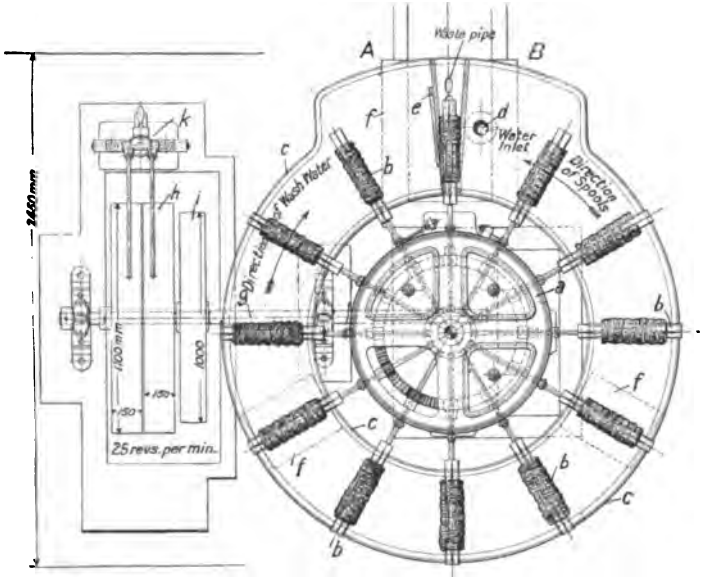

Fig. 19.—Haubold's Yarn Washing Machine (plan).

hammers. The machine, in which wooden fallers are used and which is described on p. 118 (Fig. 34), may be used for the same purpose. Both arrangements are usually employed for the simultaneous washing and blueing of bleached yarns. The well or the trough of the machine is then charged with soap solution and the necessary blue dyestuff, such as ultramarine, indigo carmine, Methyl violet, etc.

Yarn washing machines, in which the hanks are placed on revolving copper or porcelain spools, with or without squeezing rollers, are also used.

In order to closely imitate washing by hand, Weisbach constructed a machine in which the hanks are placed on revolving brass or copper spools, which are carried on both sides of a frame. A swinging motion is imparted to this frame and, therefore, to the hanks.

In another type of machine the yarn is placed on eccentric spools, by means of which it is alternately lifted out of the wash-water and plunged into it.

A *Special Yarn Washing Machine*, working on the counter-current principle, built by C. G. Haubold, jun., is illustrated in Figs. 19 and 19A. It consists of a circular iron tank *c*, over which

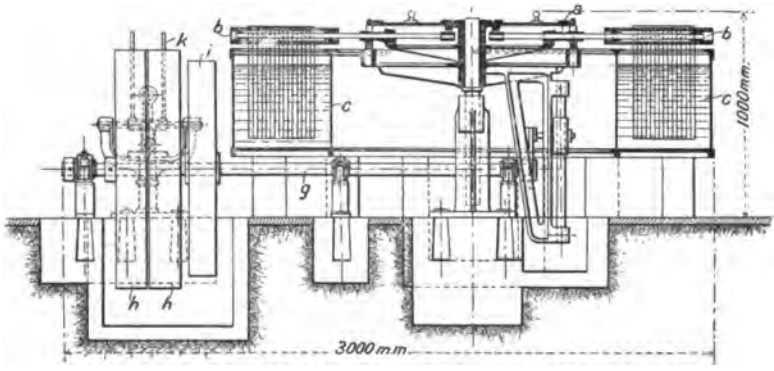

FIG. 19A.—Haubold's Yarn Washing Machine (vertical section).

are placed either 12, 18, or 24 square copper or porcelain spools *b*, on which the yarn is placed, and which are supported by radial arms. The spools revolve, and at the same time they are moved intermittently forward and backward, the forward movement being greater than the backward one. The water is introduced into the trough through the hole *d* in the bottom of the trough, and flows out of the machine opposite to where it enters and over the wooden partition *e*, the height of which can be adjusted. Thus the water circulates in the direction opposite to that in which the yarn travels. The circular trough is somewhat widened out near to the inlet and the outlet of the water, and the fresh hank is placed on to the spool at A, whilst the washed hank is at the same time removed from the spool at B. The foundation *f* may be built out as a channel for the waste water.

The trough is placed a certain distance above the ground, in order to allow the driving shaft *g* to pass underneath.

About 2,000 lbs. of yarn may be washed in one machine per day. Power required: 1 h.p.

Wringing, Squeezing, and Hydroextracting of Yarn.

Whether the yarn has now to be dried or whether it has to be mordanted or dyed, it is essential to remove a large portion of the mechanically-absorbed water. This may be effected by *wringing*. For this purpose the hank is suspended on a *peg*,

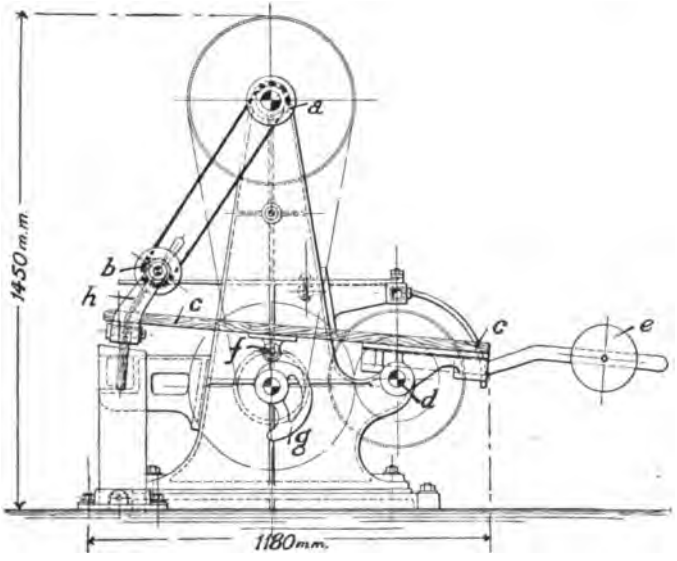

FIG. 20.—Yarn Stretching and Shaking Machine.

one end of which is either fastened into the wall or into a post. A short stick is used for twisting the hank. After untwisting, the hank is turned one-third or a quarter round, and again twisted. This operation is performed three or four times.

After wringing, the hanks are well shaken and placed on sticks ready for the dyeing or the drying operation. The shaking may be performed by means of a *Yarn Stretching and Shaking Machine*, illustrated in Fig. 20 (C. G. Haubold). It consists of the revolving spools *a* and the spools *b*, by means of

which the yarn is shaken. The latter have two bearings, which may be alternately moved out of position in order to allow a hank either to be placed on to the spools or to be removed. The arrangement carrying the spools *b* is fixed to a table *c*, which turns on the axle *d*. The amount of force applied in shaking the hanks is adjusted by the position of the weight *e*, which more or less counter-balances the weight of the table *c*. Rollers *f* are fixed to the underside of the table, and by means of these and by the wipers *g*, the table is lifted. The table then falls down and thus the yarn is stretched and shaken. Provision is also made for raising the table when the hanks have to be removed and the spools charged with fresh yarn.

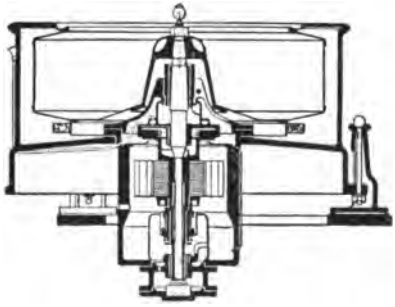

FIG. 21.—Electrically-driven Hydroextractor.

The wringing of yarn may also be effected by machines. A machine suitable for this purpose is described under "Turkey-red," p. 314.

Except in dyeing with the sulphur dyestuffs, squeezing of the yarn by means of squeezing rollers is but little used in treating cotton yarn.

The usual method of removing water from yarn and from fabrics consists in treating the material in a *Centrifugal Machine* or *Hydroextractor*. Fig. 21 illustrates an *Electrically-driven Hydroextractor* of Messrs. Thomas Broadbent & Sons, Ltd. Although steam-driven hydroextractors are extensively used, electric driving offers many advantages. The electric motor is an inherent part of the machine, because the armature revolves upon the centre spindle which carries the basket, and the field magnets are built into the framework of the machine. It occupies a small amount of floor space, the starting-up of the machine is automatic, and the starting gear is simple and constructed in such a manner that the attendant cannot damage the motor by switching on the current too suddenly. The cage of the hydroextractor is usually built of hard-rolled copper plates, perforated at the sides in order to allow the escape of the water during hydroextracting. The outer casing which

surrounds the cage is made of strong welded steel boiler-plate, and is usually lined with chemically pure lead so as to resist acids.

The material should be very evenly packed into the cage in order to avoid undue oscillation of the machine. When the cage revolves at a high speed, the wet material is pressed against the sides of the cage by centrifugal force, and thus the water is forced out of the material.

In a machine with a cage 36 inches in diameter, 50 to 120 lbs. of yarn (dry weight), or 40 to 70 lbs. of piecegoods (dry weight) may be treated at a time, and 4 to 6 charges may be hydro-extracted per hour. The cage makes 1,100 revolutions per minute and the running power required is 3 h.p. Current consumed: 24 ampères at 110 volts, or 12 ampères at 220 volts. The starting current will be about 2½ times the above.

The Bleaching of Cotton Piecegoods.

Whilst the bleaching of cotton yarn may practically be regarded as a simple operation, the bleaching of cotton piecegoods is much more complicated, because a number of substances such as starches, soaps, tallow, waxes, etc., may have been used in the preparation of the yarn for weaving. It is of the utmost importance to remove these substances, as far as possible, before the goods undergo the bleaching operation proper.

The addition of magnesium chloride to the size for the purpose of making the yarns soft, or of zinc chloride in order to prevent the formation of mildew, may frequently give trouble in the bleaching. Cloths containing these substances often become tendered during singeing.

It is the practice in some weaving sheds to remove mineral oil and iron stains (the so-called "black oil stains") by rubbing salts of lemon (acid potassium oxalate) or oxalic acid on the cloth. These places invariably become tendered in the singeing.

The practice of spraying a solution of magnesium chloride on the cotton which is used for the weft, should also be condemned. It should be pointed out that the weaver frequently employs sizing preparations the composition of which is unknown to him, and which in some cases contain substances such as those mentioned above. Paraffin wax is another ingredient used in sizing which

it is exceedingly difficult to remove and which may cause stains in dyeing.

In order to facilitate the removal of starches from the cloth by means of the boiling, the pieces, after having been run through a washing machine, are frequently allowed to lie in heaps for a considerable time, or they are steeped for 2 to 3 days in tanks containing water at a temperature of about 80° F. A small quantity of sulphuric acid may be added to the water in the steeping cisterns.

E. Lauber recommends steeping of the cloth in caustic soda lye, especially for heavy goods. The cloth is passed into boiling water containing ¾ per cent. of solid caustic soda (calculated on the weight of the cloth) and allowed to lie, closely packed, for 24 hours. Steeping in soda also materially helps to soften the particles of the shells of the cotton-seed which the cloth contains.

Another method of removing the starches by converting them into sugar, consists in treating the pieces either with malt or with a solution containing 1 to 2 lbs. of Diastafor per 100 gallons of water. Goods treated in this manner, after having been thoroughly rinsed, are either ready for dyeing or they may be passed into the kier.

In order to remove substances which might cause tendering in the singeing, a thorough washing followed by drying of the cloth, before singeing, is necessary.

Before the actual bleaching the pieces are first stamped, *i.e.*, letters and numbers are stamped on the ends with gas tar or sometimes with Aniline black.

They are stitched together by means of a special type of sewing machine, and are then ready for the singeing and boiling.

Singeing.

In order to produce certain finishes it is necessary to remove the "nap" from the face of the cloth. This is effected by either passing the cloth rapidly over the surface of strongly-heated copper plates or rollers, *plate singeing*, or by giving it a passage through a non-luminous gas flame (Bunsen flame), *gas singeing*. Singeing by means of electrically heated wires has also been suggested, but this process has, so far, not found any industrial application.

In plate singeing, the nap is chiefly removed from the surface of the cloth, whilst in gas singeing the flame penetrating more or less into and through the cloth, the loose fibres are also removed in the interior of the fabric. Thus by the latter method, the cloth is much more thoroughly singed than by the former. Such a thorough singeing may in some cases not be required and both types of singeing machines are, therefore, frequently found working side by side.

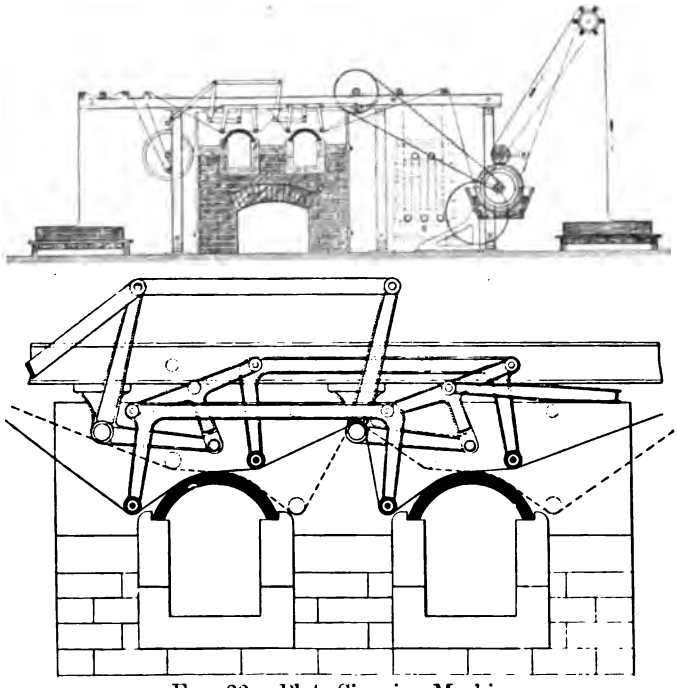

FIG. 22.—Plate Singeing Machine.
FIG. 22A.—Automatic Traversing Motion.

Fig. 22 shows a *Plate Singeing Machine* of Messrs. Mather & Platt. It is provided with either one or two curved copper plates, from 1 inch to 2 inches thick, which are heated to bright redness by furnaces below. Coal or coke is chiefly used as fuel, but quicker and more uniform heating of the plates is obtained by using crude petroleum, finely divided by means of an injector, in which it meets a current of superheated steam. The cloth passes over the plates at a speed of about 160 yards per minute, and in order to

prevent local cooling of the plates the machine is provided with an *Automatic Traversing Motion* (Fig. 22A), which constantly brings the travelling cloth into contact with a freshly-heated portion of the plates. Thus, practically, the whole of the heating surface of the plates is utilised. After singeing, the cloth is immediately passed through a water-box, or through a steaming-box in order to put out the sparks. With an oil-fired stove a speed of from 160 to 200 yards per minute can be obtained, and about 3 to 4 b.h.p. is required to drive the machine.

A *Gas Singeing Machine* (System "Felix Binder") of Messrs. Mather & Platt is illustrated in Fig. 23.

The machine is usually provided with two burners in order to

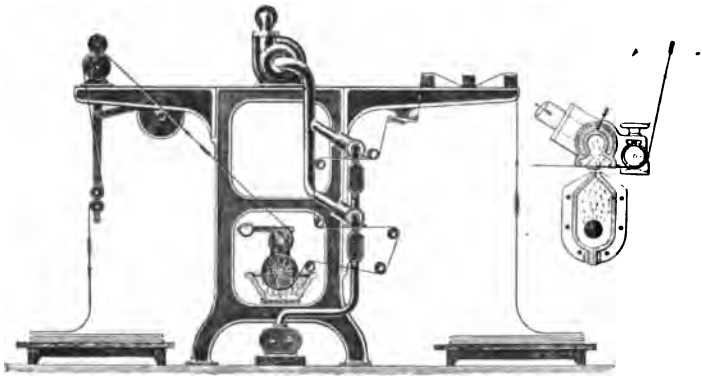

FIG. 23.--Gas Singeing Machine and sketch of Burner.

allow of the cloth being singed on both sides in one passage. Above each burner is an exhaust chamber with a cavity through which water is circulated in order to keep the chamber cool. These exhaust chambers are connected to an exhaust fan, by means of which the flame is strongly drawn against and through the cloth. A very thorough singeing is thus obtained. Both the burners and the exhaust chambers are provided with adjustable slides. The width of the flame can thus be adjusted in accordance with the width of the cloth passing through the machine. The cloth first passes over a number of wooden bars, to remove creases, and then over the upper burner. The other side of the cloth is then singed by means of the lower burner and finally, the cloth, before being plaited down, passes through a water-box, as shown in the

illustration, or through a steaming-box, in order to extinguish any sparks.

The air is usually supplied by a rotary blower or by a pump, and it is thoroughly mixed with the gas in a special mixing chamber. The machine is usually built about 80 inches wide, to singe two pieces of cloth side by side, at a speed of from 150 to to 200 yards per minute. Power required, 4 b.h.p. Consumption of gas, per burner, 78 inches wide, about 160 cubic feet per hour.

The Boiling Kiers.

After singeing the cloth may be boiled in the kier, either in rope form or in the open width.

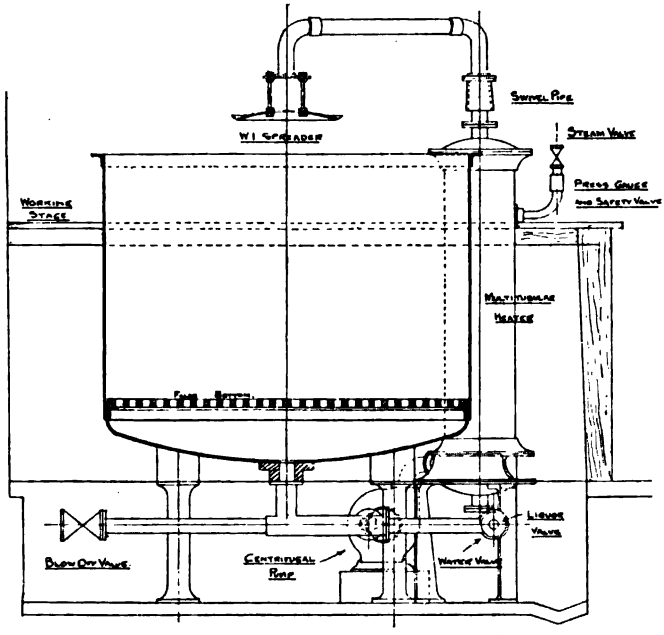

FIG. 24.—Open Top Circulating Kier.

The boiling kiers should be frequently lime-washed, in order to prevent the formation of iron stains in places where the cloth comes into contact with the walls of the kier.

The cloth must be completely immersed in the boiling liquor, or tendering will take place, and stains may be produced.

The kier should be filled with hot water immediately after the boiling lye has been discharged, in order to prevent any parts of the cloth from becoming dried.

The simplest type of boiling kier used consists of a vessel provided with a false perforated bottom and with a vertical puffer pipe in the centre. A steam pipe enters below the false bottom into the puffer pipe. The boiling liquor is forced by the steam up the puffer pipe, and by means of a spreader distributed over the material. It then percolates through the cloth, to be once more forced up through the central pipe.

A more modern type of *Open Top Kier* is illustrated in Fig. 24.

In this kier the cloth is boiled without pressure, and it is, therefore, used for boiling fabrics with coloured headings, which would be attacked by boiling in the high-pressure types of kiers. The illustration shows an *Open Top Circulating Kier* of Messrs. Mather & Platt, which is provided with a multi-tubular heater, placed on the delivery side. The circulation of the boiling lye is performed by means of a centrifugal pump, the suction side of which is connected to the bottom of the kier. From the pump the liquor is forced through the multi-tubular heater, heated by high pressure steam (60 lbs.), whence it passes to the top of the kier, where it is delivered on to a spreader, which distributes the liquor on the upper surface of the cloth. The cloth is piled in the usual way on the cast-iron grid near the bottom of the kier.

The *Vertical Kier*, shown in Fig. 25 (Messrs. Mather & Platt), is provided with a false perforated bottom, and with a puffer pipe in the centre. In this type of kier the cloth is treated under pressure, and the liquor is circulated by means of an injector. A kier holding about 2 tons of cloth is 6 ft. 6 ins. in diameter by 9 ft. deep on the parallel part. It is provided with two manholes through which the saturated cloth enters. Boys, inside the kier, guide the cloth with sticks and distribute it evenly. When the kier has been filled, the manhole covers are secured, the liquor is run in, and it is forced by means of the injector up the central puffer pipe and distributed over the cloth by the aid of the spreader. It then percolates through the cloth to the bottom of the kier, to be again delivered by the injector.

Injector Kiers, in which the puffer pipe is placed outside the

kier, are also used. In these a spray nozzle is provided at the top of the kier through which the liquor is delivered on to the cloth.

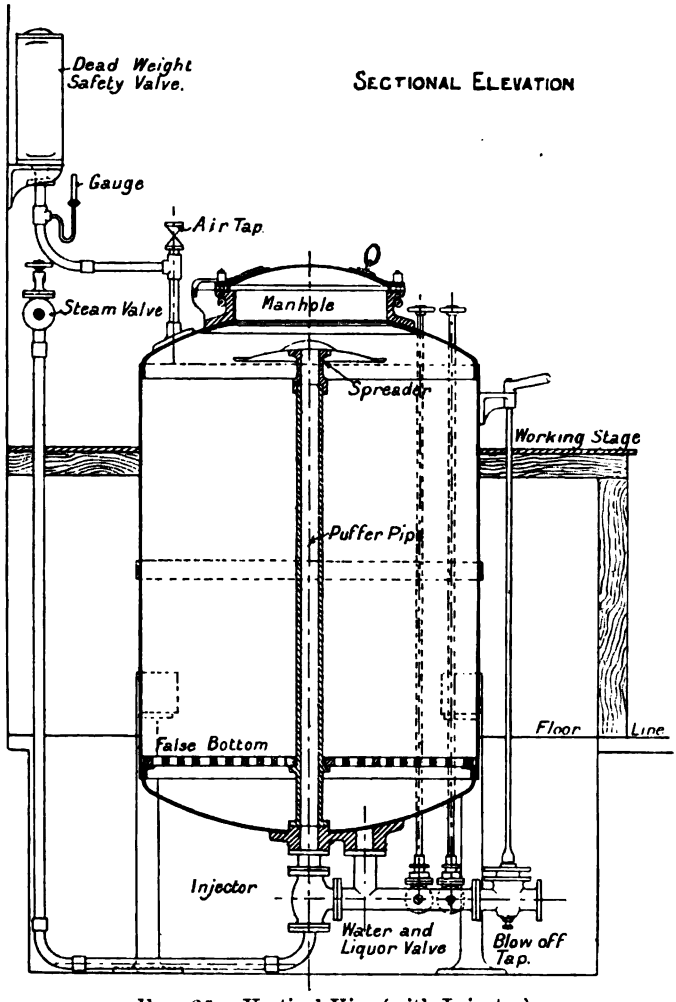

FIG. 25.—Vertical Kier (with Injector).

High Pressure Kiers have been constructed in which the boiling liquor is pressed into and out of the kier by means of steam. To this type belongs the *Pendlebury Kier*.

It consists of a large kier in which the cloth is boiled, and a

smaller one into which the boiling lye can be pressed after boiling. When the kier has been filled with cloth, steam is blown in for about 15 minutes, in order to expel the air. The boiling lye is now run into the kier, and the boiling is conducted with live steam. After boiling for some time the lye is pressed back into the small kier and the cloth may be steamed. The

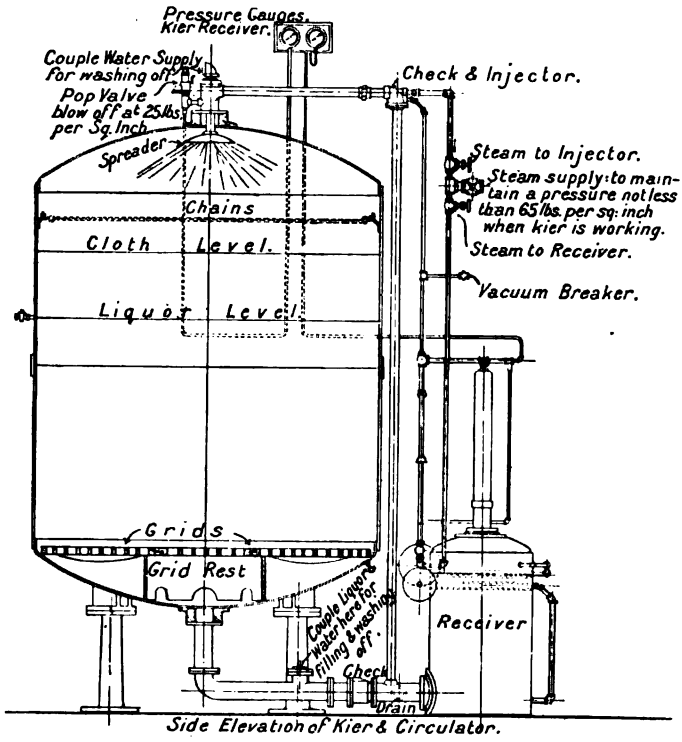

FIG. 26.—Jefferson-Walker Patent Kier.

processes of boiling and steaming are carried on alternately for 4 to 6 hours.

The *Barlow Kier* differs from the Pendlebury arrangement in that two large boiling kiers are provided; thus the boiling liquor may be pressed from one kier into the other.

The *Pendlebury-Barlow Kier* is a combination of the two former kiers. It consists of two large boiling kiers and a smaller

one into which the lye can be pressed, and in which it may be heated.

A more modern type of kier is represented in Fig. 26. It is the *Jefferson-Walker Patent Kier* of Messrs. Samuel Walker & Sons, Ltd. A small receiver is placed alongside the kier into which the lye passes from the kier, and from which it is forced by means of high-pressure steam back into the kier, where it enters at the top and is distributed over the cloth by means of a spray nozzle. The filling and the emptying of the receiver, which takes place about once every minute, is regulated automatically. It is claimed that by means of the alternate compression of the cloth produced by the suction, when the lye passes into the receiver, and its expansion when the lye returns into the kier, a better boiling effect can be produced in a shorter time than is the case in kiers in which a regular circulation is produced by means of pumps or injectors.

Exhaustive experiments have been carried out in a large bleach works, in order to ascertain the steam consumption, etc., of this kier, as compared with a *Heater Kier*, from which the following figures have been extracted :—

In the first experiment the cloth (9,072 lbs.) was *lime-boiled* in a *Jefferson Kier* of 9 feet 3 inches diameter by 10 feet 6 inches high at the parallel part. Average steam pressure, 69 lbs. per square inch ; time of boiling, 6 hours. On the average the receiver was emptied once in 1 min. 25 secs. ; 6,385 lbs. of steam were consumed, equal to 0·7 lbs. of steam per 1 lb. of cloth.

Soda Ash Boil.—9,072 lbs. of cloth were boiled in the same kier for six hours, at an average steam pressue of 58 lbs., with a steam consumption of 5,244 lbs., equal to 0·57 lbs. per lb. of cloth.

The following figures were obtained by boiling in a *Heater Kier* :—

Lime Boil.—9,326 lbs. of cloth were boiled 11¾ hours at an average pressure of 70·47 lbs. The steam consumption was as follows :—

Passing through meter for 11¾ hours ...	6,592 lbs.
Extra steam for boiling 14 inches water...	275 lbs.
Steam used for running the pump ...	2,840 lbs.
	9,707 lbs.

This is equal to a steam consumption of 1·04 lbs. per lb. of

cloth. In the *Soda Ash Boil*, in the same kier the steam consumption also amounted to 1·04 lbs. per lb. of cloth. From these figures it will be seen that the saving in steam in the new kier was equal to 39 per cent.

A type of vertical kier which is very largely used is the *High*

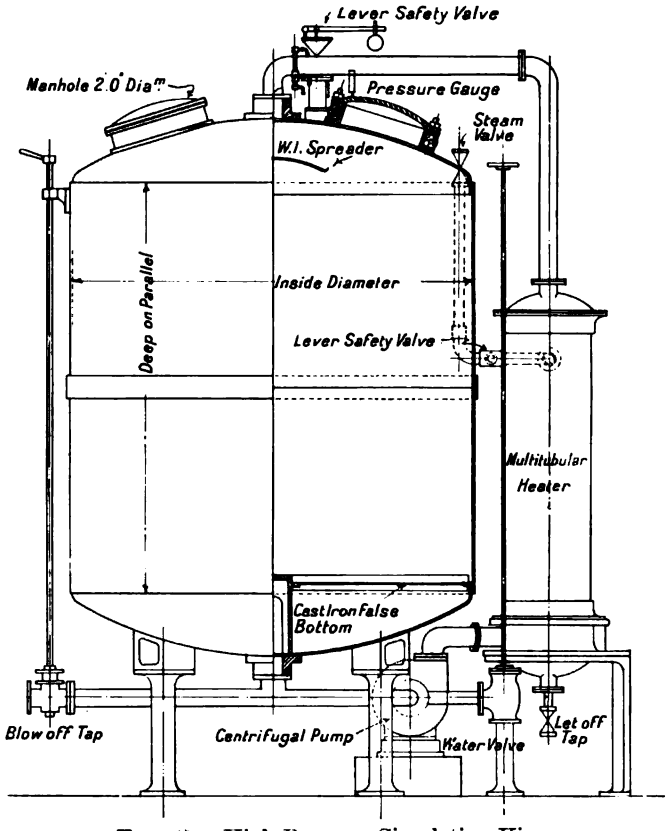

FIG. 27.—High Pressure Circulating Kier.

Pressure Circulating Kier, which is similar to the *Thies-Herzig Kier*, also known as the *Walsh Kier*, Fig. 27 (Messrs. Mather & Platt). It consists of a cylindrical boiler, made either of wrought iron or of mild steel, usually about 6 feet 6 inches diameter and 9 feet deep at the parallel part. A kier of this size holds about 2 tons of cloth. A large manhole with a hinged cover is provided

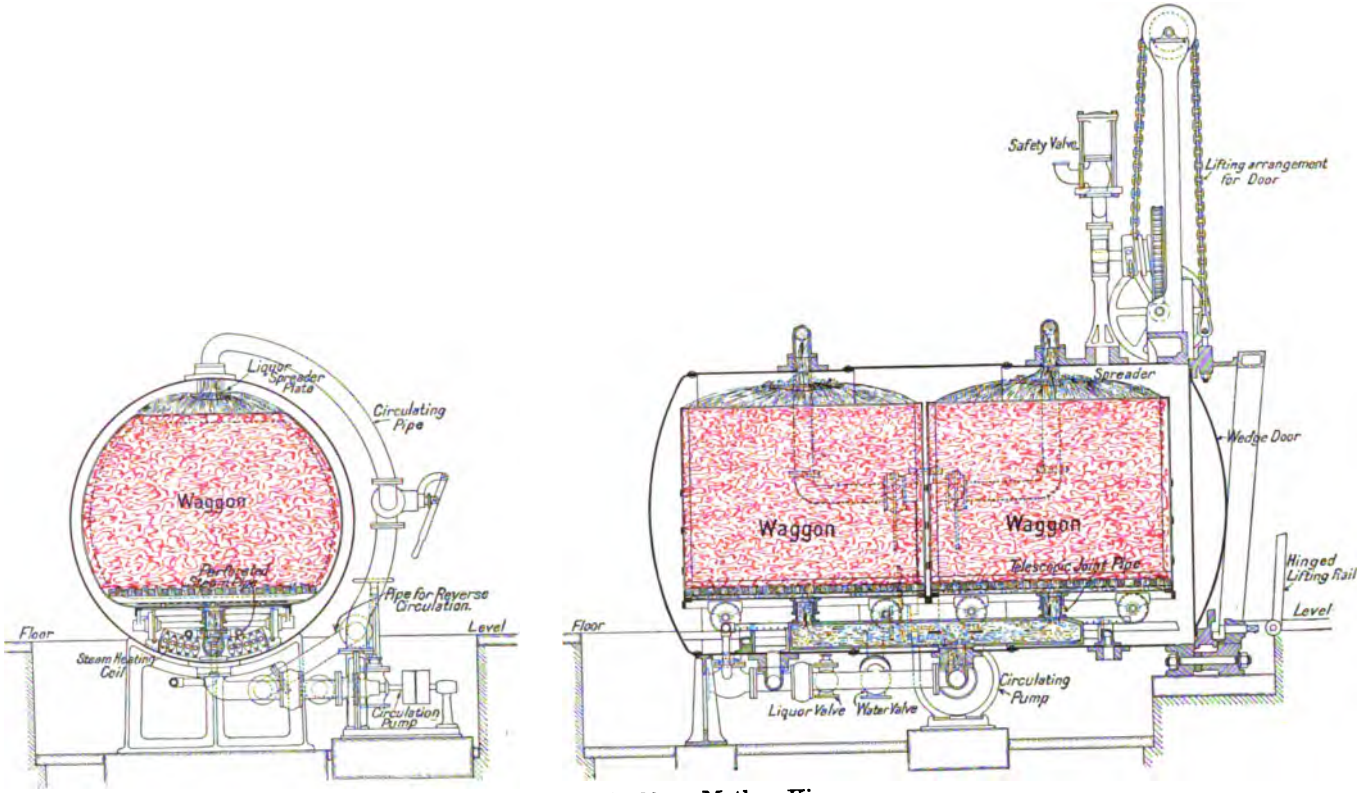

FIGS. 28, 28A.—Mather Kier.

UNIV. OF
CALIFORNIA

on the top of the kier. The cloth is run into the kier through this opening and plaited down in the usual manner on to the cast-iron grid at the bottom of the kier. After the top has been secured, the liquor is run in and circulated by means of the centrifugal pump, which takes it from below the grid and passes it through the pipes contained in the vertical multi-tubular heater, surrounded by high pressure steam. From here the liquor is returned to the top of the kier, where it is showered over the cloth. In this type of kier, which is particularly suited for the *caustic soda boil*, the live steam does not come into contact with the boiling liquor. The boiling is conducted during 4 to 10 hours at pressures varying from 25 to 60 lbs. per square inch.

The cloth is usually run into the kiers at a speed of about 200 yards per minute in two parallel strands. The filling and the emptying of a kier will, therefore, occupy about 2 hours.

Double-jacketed Kiers have been introduced by Haubold and by Gebauer. The inner jacket in these kiers is perforated, with a view to surrounding the cloth with liquor and making the liquor circulate radially through the cloth. Difficulties have been experienced with these kiers in some cases through the perforations in the inner jacket becoming gradually filled up.

A kier which has found very wide application is the *Mather Kier*, by means of which the investigations of the late Horace Koechlin were introduced into practice. It is illustrated in Figs. 28, 28A. The kier is of the horizontal type, and is built in sizes to hold from 25 cwts. to 70 cwts. of cloth. It is 7 feet in diameter, and from 6 feet to 16 feet long at the parallel part. The door is of a wedge-shape, and is raised and lowered mechanically by means of a small rope-driven crab carried from the pillar. The joints are made tight by means of a cam and lever, no screwing or unscrewing of the bolts being required when opening or closing the kier. The cloth is contained in waggons made of galvanised iron, which are run on rails on the floor. Each kier is provided with four of these waggons, two of which are filled outside the kier with cloth which has been previously saturated with caustic soda lye, whilst the other two are in the kier. No time is, therefore, lost in filling and emptying, and the kier can be kept working continuously. The waggons are watertight and provided with perforated false bottoms, with a liquor chamber below. When the waggons are in their proper position in the kier the flange of

the telescope pipe projecting from the liquor chamber of the waggon makes a joint with a longitudinal pipe, which runs under the waggons, in the centre of the kier. The centre of this pipe is connected to the suction of the centrifugal pump, from which the liquor is delivered to the top of the kier and distributed over the cloth in each waggon. The boiling liquor can be heated both by perforated and by closed coil heating pipes. When working, the kier is filled about one quarter of its depth with lye, and provision is made for reversing the direction of the liquor, so that it passes up through the cloth contained in the waggons, and thence into the kier, whence it is taken back to the pump. Outside the kier is an arrangement of turn-tables and lines, and by the aid of a capstan the waggons can be drawn into or out of the kier and placed in a suitable position for passing the cloth through any of the succeeding operations. The cloth is usually boiled for from 6 to 8 hours at about 40 lbs. pressure per square inch, and about 800 gallons of boiling lye are required to treat 4,000 lbs. of cloth.

Of the kiers in which the cloth is treated in the *open width*, the *Grether-Bentz-Edmeston Kier* should be mentioned as one of the earliest. It consists of a wrought-iron chamber, into and out of which the cloth is passed through liquor seals. Inside the kier the cloth is conducted over rollers, by means of which it is alternately passed through the boiling lye and exposed to an atmosphere of steam. Before leaving the kier the cloth travels to and fro over rollers, during which time it is exposed to the action of the steam.

The *Tagliani-Rigamonti Kier* is built upon a somewhat similar principle. The cloth, instead of being passed over rollers, is plaited down into a channel formed by two endless travelling chains.

Another type is illustrated in Fig. 29. It is the *Spenlé Patent Continuous Open Width Kier* of Messrs. Sir James Farmer & Sons, Ltd.

The cloth is acted upon by the boiling alkaline liquor and by steam for a considerable time under slight pressure, obtained by means of a liquor seal, which is divided by a suitable partition *c* into two channels *d* and *e*. The partition extends into the liquor tank *f*, placed at the top of the column. The cloth *a* enters through partition *h* of the tank, where it is subjected to

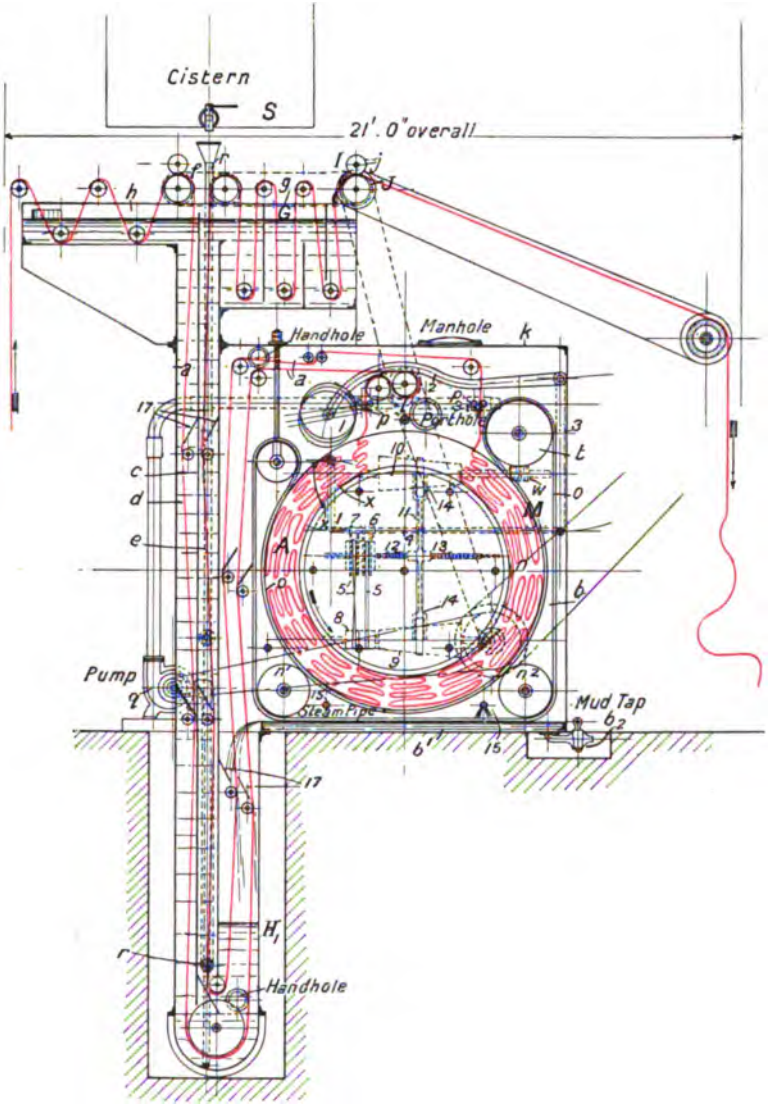

FIG. 29.—Spenlé Patent Continuous Open Width Kier.

UNIV. OF
CALIFORNIA

the action of spent liquor. This is continuously discharged through an overflow pipe. The cloth then passes through channel *d* to the steaming chamber *b*. Suitable guide-plates 17, are employed in order to assist in the threading of the cloth over the rollers of the machine. After treatment in the kier the cloth passes up through a channel *e* and through the second part *g*, of the tank, where, by means of rollers or baffle plates, it is caused to take a circuitous course against a current of inflowing water delivered from pipe *i*, which is placed just below the nip of the squeezing rollers *j* and at the delivery end of the apparatus. A considerable portion of the alkali is thus removed. The liquor-seal is extended to form a sump below the bottom of the chamber *b*, thus giving a fair head of liquor without making the apparatus unduly high. The tank *f* also allows of variations of pressure in the steaming chamber without any considerable rise and fall in the top level of the seal column. The kier in which the steaming takes place consists of a rectangul casing *k*, in which is arranged an accumulator consisting of an endless lattice web, supported at each side on the flanges of the drum *n*. The drum *n* and the material which is plaited into the accumulator space are borne by pulleys n^1, n^2. A pair of oscillating spurt pipes *p*, having downward-directed jets, effect a kind of plaiting action. The drum *n* slowly revolves as the material accumulates. It is driven by sprocket wheels *t*, which gear with the chains *o*. A regulator (to ensure the uniformity in thickness and density of the layer of material in the accumulator) consists of a roller 1, which rests on the accumulated material, and is mounted on levers 2, connected with arm 3, adapted to act on the driving mechanism, so as to increase or decrease the speed of the lattice and drum according to the thickness of the material. The spurt pipes *p*, p^3, are supplied with liquor from a pump *q*, which draws from the seal adjacent to a pipe *r*, from which fresh liquor enters the apparatus *s*. The liquor from the spurt pipes percolates through and scours the material in the accumulator and then collects in a shallow receiver b^1 at the bottom of the chamber *b*. Sediment washed out of the fabric collects in the receiver and can be periodically blown out through a cock b^2. Steam is admitted to the chamber *b* by means of pipes 15. The cloth runs at a speed of about 60 yards per minute,

and it remains in the kier for one hour. Power required 5 h.p.

Special bleaching machinery for treating fabrics in the open width has been introduced by Messrs. Jackson & Brother. It consists of a *Preparing and Batching Arrangement*, the *Open-Bleach Kier*, and a *Chemicking and Souring Machine.*

The *Preparing and Batching Arrangement* is shown in Fig. 30. Before placing the cloth into the boiling kier, it is essential that it should be impregnated with caustic soda lye and made

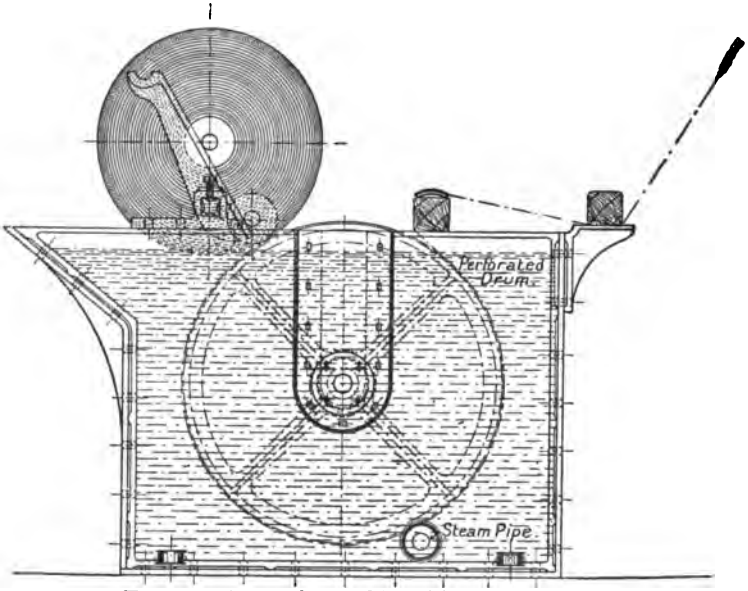

FIG. 30.—Preparing and Batching Arrangement.

into good hard batches. The machine consists of a cistern, filled with caustic soda lye which has been used for a previous boiling, from the sides of which is carried a large perforated drum. The cloth passes round the drum and a perforated steam pipe is fixed close to the drum at the bottom, which serves for the purpose of heating the liquor. The steam also forces the liquor through the cloth. The cloth, after having passed round the drum, is made into a large batch.

The *Open Bleach Kier*, shown in Fig. 31 (side elevation), and Fig. 31A (front elevation), is of the horizontal type, and is

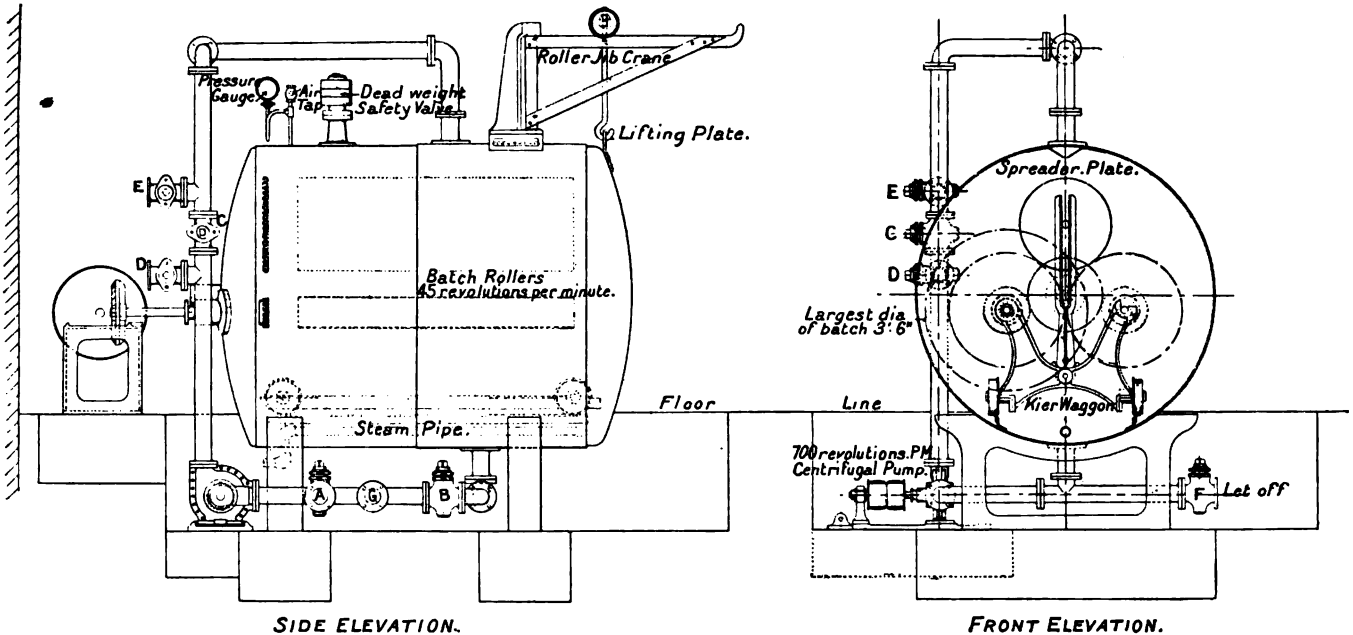

FIGS. 31, 31A.—Jackson's Open Bleach Kier.

made of steel plates to stand a working pressure of 60 lbs. per square inch. The door is swung on a jib crane mounted on the top of the kier, and can thus be readily attached or detached as required. The batch of cloth from the batching machine is now placed in position on the waggon, which, when placed into the kier, automatically couples with the driving and reversing gear at the back of the kier. A drum is carried by oscillating levers or arms, which are free to move from side to side, and thus enable the drum to adjust itself to the increasing and decreasing sizes of the batches as the cloth is wound on and off. In this manner the cloth is always kept at a uniform tension and free from creases. The drum also exerts considerable pressure upon the cloth, and it, therefore, squeezes the liquor into and through the fabric.

When the kier is ready for work the caustic soda lye is run in by means of a centrifugal pump, and steam pressure is applied until a pressure of about 40 lbs. per square inch has been reached. The cloth is now wound off the one batch roller on to the other, and *vice versâ*, for about two hours, after which time the boiling should be completed. The reversing gear works automatically. A batch contains from 1,900 to 2,200 yards of cloth.

The *Chemicking and Souring Machine* consists of an arrangement similar to that employed in the kier. The batches are placed into a cistern in which they may be treated with bleaching powder solution, soured and washed. The winding operation is the same as in the kier, and a heavy drum is also provided, which rests on the batches.

Of the great number of other kiers which have been suggested an arrangement patented by Sir William Mather may be mentioned, in which the cloth is wound into a large batch which is placed into a horizontal kier. The boiling lye is pressed through the cloth in the direction of the weft by means of a powerful centrifugal pump.

Gebauer-Theis suggested the following method of boiling: The cloth is padded with the caustic soda lye and batched upon corrugated rollers. The batches are then placed upon a waggon and steamed in a kier of the horizontal type.

An interesting new type of *Open Width Kier* has been recently

UNIV. OF CALIFORNIA

patented by A. Huillard (Mather & Platt). The kier is square in shape and is divided into three compartments by means of two perforated plates. The cloth, in the open width, is plaited into the middle compartment, which is wider than the two outer ones. It is forced down by means of a light cover which prevents it from rising during the boiling operation. The liquor, which is circulated by means of a pump, enters one of the outer compartments at the top; it then passes through the cloth into the third compartment, from which it returns to the pump through a pipe placed near the bottom of this compartment. The circulation of the boiling liquor can be readily reversed.

The chief methods employed in bleaching cotton piecegoods will be illustrated by the following examples taken from actual practice.

Bleaching for General Purposes.

This method especially applies to the following goods:—Sateens, fine twills, brocades, lawns and fancy woven goods. The quantities given are for: 300 pieces, total weight about 2 tons, *i.e.*, 150 pieces of brocades, width 36 inches, length 84 yards per piece; 100 pieces sateen, width 40 inches, length 90 yards per piece; and 50 pieces lawns, width 32 inches, length 124 yards per piece.

After stitching, the goods are usually singed on both sides on a gas singeing machine and wetted out. It is advisable to allow the goods to lie overnight.

First Boil.—The pieces are now run through a washing machine into the kier. Both high or low pressure kiers may be used. Boiling is continued for 8 to 10 hours with about 1,200 gallons of caustic soda lye, specific gravity, 2° Tw. After boiling, the goods are passed through the washing machine.

It should be pointed out here that caustic soda should not always be used, as it renders some classes of goods too soft when bleached. Boiling in an open kier with lime, followed by an ash and rosin boil after the first chemicking and souring, gives better results.

First Sour.—It is the usual practice to sour the goods in a souring tank (see Fig. 32, p. 102), in which hydrochloric acid at 2° Tw., is circulated and sprayed over the pieces for about 2 hours. About 1,800 gallons of souring liquor are required.

UNIV. OF CALIFORNIA

Another method of souring consists in passing the goods through an ordinary washing machine, into which the hydrochloric acid is allowed to run gradually whilst the cloth is passing through.

The souring is followed by twice washing, after which the pieces are passed back into the kier for the second boil.

Second Boil.—The cloth is boiled for 6 hours with caustic soda lye of 1° to 1½° Tw.

Second Sour.—The pieces are run from the kier through the washing machine, and are now soured either in the cistern or in a washing machine, as described under "first sour," with hydrochloric acid of 1½° Tw. This is followed by two passages through the washing machine.

Chemicking.—From the washing machine the pieces pass into the chemic cistern, in which they are treated for 2 hours with a solution of bleaching powder, specific gravity 2° Tw. About 1,800 gallons of liquor are required for this purpose.

Mather & Platt's arrangement of *Chemic and Sour Cisterns* for bleaching cotton piecegoods in the rope form is shown in Fig. 32 (front sectional elevation), Fig. 32A (end sectional elevation) and Fig. 32B (plan). Two strands of cloth are run into each cistern at a time. The cisterns are made of wood (sometimes lined with lead), or, preferably, of stone. The pits containing the bleaching powder solution and the acid respectively are placed immediately below the cisterns. The liquors are lifted by means of centrifugal pumps made of brass, and are delivered into distributing tanks, (the bottoms and the sides of which are perforated), placed above the cisterns, from which they are showered on to the cloth. The cisterns are provided with wood false bottoms on to which the cloth is plaited.

A cistern of the dimensions given in the illustration will hold about 2 tons of cloth. If 3 tons of cloth have to be treated at a time, cisterns of the following dimensions will be required: Length 10 feet, width 8 feet, height 6 feet 6 inches.

As in the case of souring, the chemicking may be conducted in a washing machine. About 800 gallons of bleaching powder solution, 1½° Tw., are prepared and gradually run into the machine whilst the pieces are passing through. After the souring it is advisable to allow the pieces to lie for 1½ to 2 hours. The cloth is now well washed and passed into the

Third Sour.—As in the first and second sour, the pieces are

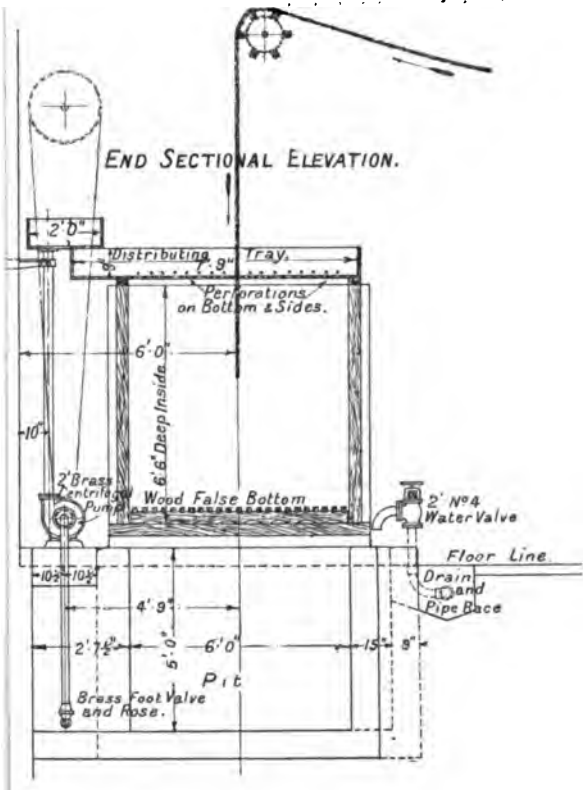
END SECTIONAL ELEVATION.
2'0"
Distributing Tray.
7'9"
Perforations on Bottom & Sides.
6'0"
6'6" Deep Inside.
10"
2' Brass Centrifugal Pump
Wood False Bottom
2' No 4 Water Valve
Floor Line
Drain and Pipe Place
10½
10½
4'9"
2'7½"
5'0"
6'0"
15"
8"
Pit
Brass Foot Valve and Hose.

sterns.

either treated in the cistern or in a washing machine with hydrochloric acid, 1° Tw., for about 2 hours. The pieces are now thoroughly washed until free from acid, run through the squeezer, mangled and dried. Goods which have to be dyed are, from the mangle, generally batched up on rollers, but not dried until after dyeing.

Goods required for white finishes may be *blued*, either in the *squeezer* or in the *water mangle*.

Madder Bleach.

This method of bleaching, although chiefly employed in print works, is of sufficient interest to be given here. In the madder bleach every kind of impurity is removed; it is the most thorough kind of bleaching. The quantities given are for 4,480 lbs. of cloth, *i.e.*, 300 pieces, 36 inches wide, length 76 yards per piece; and 50 pieces, width 36 inches, length 116 yards each. The pieces are singed, wetted out and usually run directly into the kier. Allowing the goods to lie in the wet state overnight is not often practiced.

First Boil. (*Lime-boil, Lime-bowk, Bucking, Bowking*).—88 lbs. of quicklime (equal to 2 per cent. calculated on the weight of cotton) are carefully slaked and mixed in a large tank with about 800 gallons of water. The wetted out pieces are run through the milk of lime either in an ordinary *liming machine* or in a washing machine. The liming machine consists of a trough in which are placed three guide-rollers, and which is provided with a pair of squeezing rollers. During the passage of the pieces through the liming machine the milk of lime is run into the machine in a continuous stream. The flow should be regulated in such a manner that all the milk of lime has been run into the machine when the entire length of cloth has passed through it.

The excess of lime having been squeezed out by the squeezing rollers, the goods are now passed directly into the kier. About 600 to 700 gallons of boiling water are run into the kier, and the boiling is conducted for about 8 hours at a pressure of about 40 lbs. per square inch.

First Sour. (*Lime-sour or Grey-sour*).—The pieces are usually soured in a washing machine into which the acid solution is run continuously. About 1,200 gallons of hydrochloric acid, 2° to 3° Tw., are required to sour 2 tons of cloth. After souring the goods

are allowed to lie for about 2 hours. The souring is now followed by a passage through two washing machines, after which the cloth is run back into the kier.

Second Boil.—Preparation of the boiling liquor:—224 lbs. of soda ash, and 6 gallons of rosin soap (containing about 30 per cent. of rosin) are boiled up with 700 gallons of water. The cloth is run into the kier charged with the liquor. It is boiled for about 7 hours at a pressure of 25 lbs. The boiling is followed by a passage through two washing machines.

Second Sour.—The souring is carried out as in the first sour, using about 600 gallons of hydrochloric acid of specific gravity $1\frac{1}{2}°$ Tw. After souring, the cloth is allowed to lie for 2 hours. It is now washed twice and run into the kier for the

Third Boil. (*Soda Ash Boil*).—The boiling is conducted for 6 hours at 15 lbs. pressure with 700 gallons of water and 120 lbs. soda ash. The goods are washed twice after the boiling.

Third Sour.—They are now soured with 600 gallons of hydrochloric acid, 1° Tw., and afterwards washed twice.

Chemicking.—Two methods of chemicking are in general use.

(1) About 400 gallons of bleaching powder solution, $\frac{1}{2}°$ Tw., are prepared and usually stored in an earthenware tank. The pieces are passed through a machine, similar to an ordinary washing machine, into which the bleaching powder solution is run continuously. After impregnation with this solution the goods are allowed to lie for 2 hours.

Fourth Sour. (*White-sour*).—The pieces are not washed but passed directly through hydrochloric acid, 1° Tw., allowed to lie for about 1 hour, washed three times or until free from acid, squeezed, scutched, and dried.

(2) This method differs from (1) in that a bleaching powder solution of 1° to $1\frac{1}{2}°$ Tw., is used, and further, in that the pieces are washed after the impregnation with this solution and before the fourth sour. The souring, etc., is conducted as in method (1).

Turkey-red Bleach.

The Turkey-red bleach is similar to the market bleach. It is chiefly used for yarn or cloth which has to be dyed *plain* Turkey-red or Alizarine red.

The cloth is usually not singed and not treated with bleaching powder solution (chemicked).

The process consists of:—

Washing, boiling in water, boiling in caustic soda lye (twice), without the addition of rosin soap, souring and washing.

Scouring of Cotton Cloths for Blacks, etc.

When dyeing *blacks, khakies, browns, etc.*, bleaching is not always necessary. It is sufficient in these cases to scour the cloth.

The following is a typical method of scouring *plain calicos, drills, twills, etc.:*

The quantities are given for 200 pieces, width 36 inches, length of each piece about 104 yards, total weight 1½ tons. After stitching, the cloth is singed, usually on a plate singeing machine. It is then run through a washing machine and in nearly all cases it is allowed to lie overnight. The boiling may be conducted in either high-, or low-pressure kiers. The boiling liquor (specific gravity, 2° Tw.) is prepared by dissolving the necessary amount of caustic soda in an iron tank of about 1,000 gallons capacity. First the cloth and then the caustic soda liquor, which has been heated to boiling point, is run into the kier. After boiling for 6 to 8 hours, the liquor is discharged and the pieces are passed once through a washing machine. They are then soured in a washing machine with hydrochloric acid of 2° Tw., or with sulphuric acid of 1½° Tw. The acid solution (about 600 gallons), is prepared in a tank made of stone or lead lined, and is allowed to flow continuously into the washing machine during the passage of the pieces. The goods are now allowed to lie for about 1 hour; they are finally thoroughly rinsed, water-mangled, and either made into batches or dried.

See also "*Crabbing.*"

Moleskins and *Fustians* are usually freed from starch before dyeing. For this purpose they are first wetted out by giving them 4 to 6 ends in a jigger containing boiling water. The pieces are now given 6 to 8 ends in cold water, to which the necessary amount of *malt* or *Diastaphor* has previously been added. This is followed by a "soda boil," after which the pieces are ready for dyeing.

Pile fabrics, such as *Velvets, Velveteens, Cords*, and *Corduroys* are usually steeped in large cisterns in a cold solution of malt or Diastaphor for 48 hours. It is the practice in some works to

heat the liquor, after steeping, slowly to the boil, and to boil the goods in the cistern for 6 to 8 hours. During this time the liquor is continuously circulated by means of a pump or a steam injector. The goods are then allowed to lie in the cistern overnight. Washing in hot water and hydroextracting in the open width in special hydroextractors completes the operation.

Velveteens are usually singed on a plate singeing machine, cords on a gas singeing machine. They are dyed in the ordinary jigger.

Half Bleach.

The so called half bleach may be considered as a continuation of the scouring; it is employed for dyed shades which do not require a full bleach.

The pieces, which have been scoured as described above, are chemicked with a solution of bleaching powder at ½° Tw., either in tanks or in a continuous machine. The operation occupies from 1 to 2 hours. This is followed by souring for 1½ hours with hydrochloric, or sulphuric acid, specific gravity ½° to 1° Tw., either in tanks or in a machine similar to an ordinary washing machine. The pieces are finally thoroughly rinsed, water-mangled and batched on rollers, or dried.

Market Bleach (for White Finish Shirtings, etc.).

This method of bleaching differs from the other methods in that the boiling is invariably conducted in low-pressure kiers; the time of boiling is consequently prolonged. Sulphuric acid is used in souring in preference to hydrochloric acid, rosin soap is used in boiling, and, in many instances, the goods are chemicked between the boils. By boiling in open kiers the coloured headings of the pieces are kept intact and the loss in weight caused by the boiling is less, as compared with boiling in high-pressure kiers. The weight of the finished material is a serious consideration as regards this class of cotton piecegoods. The souring with sulphuric acid is, therefore, a distinct advantage as compared with souring with hydrochloric acid.

The emulsifying property of rosin-soap materially assists in the removal of impurities from the fabrics. Boiling with rosin soap also adds weight, because the rosin is never completely removed by the subsequent processes of boiling, souring, and

chemicking. The free rosin retained is also very material in the production of certain effects in the finishing of the fabrics, in that it helps to produce, after calendering, a hard "feel," with a smaller proportion of starch, or other stiffening material.

Some finishes, such as the so-called "Hand Finish," have to be guaranteed as pure finishes, *i.e.*, no starches or other finishing materials have to be added in the finishing operation, still the cloth is required to possess a firm or hard "feel." This can only be obtained with the aid of the free rosin.

By applying a chemicking bath between the boils a better white is obtained, and the natural colouring matters of the fibre are more readily destroyed without severe boiling with alkaline liquors.

The following is a typical example of a "Market Bleach" for "Finishing Whites."

Description of cloth:—445 pieces, width 39½ inches, length 74 yards each; total weight 5,600 lbs.

The pieces are singed on a plate singeing machine, wetted out and passed immediately, without being allowed to ferment, through a washing machine containing milk of lime, from which they are run into the low-pressure kier. The milk of lime, which is admitted into the machine in a continuous stream, is prepared by slaking about 1 cwt. of quicklime with 800 gallons of water.

First Boil.—The kier is about 8 feet in diameter and 8 feet 6 inches in height. It is not usual to heat the water previous to running it into the kier. After the cloth has been packed into the kier, cold water (about 700 gallons) is run in, until the cloth is covered, steam is turned on and the boiling conducted for at least 10 hours. The pieces are passed directly out of the kier through a washing machine into the souring tanks.

First Sour.—About 2,400 gallons of sulphuric acid, specific gravity 2° Tw., are prepared in a tank situated below the souring tank. The acid is lifted by means of a centrifugal pump and sprayed over the cloth for about 2 hours. For the souring of subsequent lots of material fresh sulphuric acid is added after every operation in order to bring the liquor to the original strength. After souring, the cloth is washed twice, and again run into the open kier. In some special cases the cloth is now chemicked.

Intermediate Chemicking.—The chemicking is conducted in tanks in the manner described under "souring," with about

2,400 gallons of bleaching powder solution, specific gravity ½° Tw.; the goods are finally washed. The bleaching liquor is kept for further lots. The cloth is now run into the open kier.

Second Boil.—The kier is charged with boiling water, to a depth of about 1 foot above the false perforated bottom, in which 1½ cwts. of soda ash and 5 gallons of rosin soap (30 per cent.) are dissolved.

When all the cloth has been plaited into the kier, sufficient hot water (about 600 to 700 gallons) to completely cover the cloth is run in, the steam is turned on, and when hot a further 5 gallons of rosin soap is added. The boiling is continued for about 8 hours, after which the cloth is washed twice.

Second Sour.—The pieces are run into the souring tanks and soured, as in the "first sour," with sulphuric acid, specific gravity 1½° Tw., washed once in the washing machine and again run into the kier.

Third Boil.—The cloth is boiled as in the "second boil" for 6 to 8 hours, with 1 cwt. of soda ash, and 5 gallons of rosin soap. This is followed by two passages through the washing machine. Souring is not often applied at this stage, but the cloth is usually directly run into the chemicking tanks.

Chemicking.—The goods are treated with about 2,400 gallons of bleaching powder solution, specific gravity ½° to 1° Tw., for about 2 hours, after which they are passed once through the washing machine and then run into the souring tanks.

White Sour.—The pieces are soured for 2 hours with sulphuric acid at 1° Tw., washed three or four times (until free from acid), passed through the squeezer and the scutcher, finally water-mangled and dried.

The "blueing" may be carried out either in the squeezer or in the water mangle.

Bleaching of Coloured Goods.

The fastest colours are attacked and partly destroyed if they have to pass through all the operations which are necessary to give a "full bleach."

The methods of dyeing one and the same dyestuff vary very considerably in different works, and the fact that certain shades have been produced with the same dyestuff is, therefore, no guarantee that they will exhibit the same resistance to bleaching.

The same applies to the different methods of boiling,

bleaching, and souring; they also differ to such an extent that whilst a colour may withstand the bleaching satisfactorily in one works it may give exactly opposite results in another.

If the necessary care is exercised in bleaching, the following dyestuffs may be considered as fast to bleaching:—

Alizarine red on aluminium, aluminium-iron, or on iron mordant, indigo, chrome yellow, chrome green (indigo and chrome yellow), manganese bronze, Aniline black, Diphenyl black, Alizarine Yellow GG and 5G, and Alizarine Orange N on chromium mordant, Primuline treated with bleaching powder solution.

The principal types of coloured goods which have to be bleached are: *Drills*, chiefly with blue, red, and black stripes; *Oxfords*, chiefly coloured checks; *Mulls*, coloured headings; and one of the most important, *Dhooties*, which have coloured borders or selvedges, chiefly in red, black, yellow and orange.

The preservation of the colours and the production of a perfect white on the uncoloured portions of the fabric form the chief considerations in bleaching coloured goods; and it is, therefore, exceedingly difficult to give a method which in every case will give a satisfactory result. In the boiling of coloured goods soda ash and soaps are invariably used in place of caustic soda. Weak hydrochloric acid is employed in souring, and in some instances the goods are not soured at all. Very weak bleaching powder solutions are used, and the pieces are usually washed after the chemicking, but not soured.

The boiling is generally repeated twice or three times, a rinse following each boil. The pieces are very loosely packed in the kier in order to prevent *marking off* of the colours.

The *bleeding* or running of the colours cannot always be attributed to tight packing. It is either due to the dyestuff used, or it may be caused by the excessive strength of the boiling and bleaching agents employed.

In the following a method of bleaching cotton piecegoods with coloured borders (Dhooties) is described.

The quantities are given for 300 pieces, *i.e.*, 120 pieces, width 41 inches, length 48 yards each; 100 pieces, width 46 inches, length 48 yards each; 80 pieces, width 51 inches, length 48 yards each.

First Boil.—The pieces, after having been stitched together,

are run without singeing through a washing machine into a kier of the open type which has been filled with hot water to a depth of about 1 foot above the false bottom. The following ingredients are dissolved in the water before the cloth is run into the kier: 22 lbs. soda ash, 33 lbs. soap.

An alkaline soap is used for this purpose, known as *Bleaching Paste*. When the kier has been charged with the cloth, sufficient water is run into it to just cover the goods (about 1,000 to 1,100 gallons are required).

11 lbs. of soda ash and 11 lbs. of soap are dissolved in water and added to the liquor already in the kier. The goods are now boiled for 10 hours without pressure. After the liquor has been run out of the kier the cloth is passed through a washing machine, and if the colours will resist souring, it is now run into a souring cistern in which hydrochloric acid of $\frac{1}{4}°$ to $\frac{1}{2}°$ Tw., is sprayed over the pieces for about 1 hour.

The souring is followed by two passages through the washing machine, after which the pieces are returned to the kier.

Second Boil.—The goods are boiled in exactly the same manner as in the "first boil," *i.e.*, for 10 hours with 22 lbs. of soda ash and 33 lbs. of soap. A passage through the washing machine is given after the second boil, but only in few cases are the pieces soured with hydrochloric acid of $\frac{1}{4}°$ Tw., for 1 hour and washed. More frequently it is the practice to return the pieces directly to the kier for the

Third Boil.—The goods are boiled from 5 to 6 hours with 15 lbs. of soda ash and 20 lbs. of soap, after which they are washed twice and either run into the souring cistern or into the chemick cistern. In a few instances only is souring resorted to at this stage. The third boil is frequently unnecessary.

Chemicking.—The method of chemicking is the same as described under "Shirtings." The strength of the bleaching liquor is, however, only $\frac{1}{8}°$ to $\frac{1}{4}°$ Tw. The goods are treated for about 2 hours in the bleaching cisterns.

Only in few instances, when the acid has a brightening effect upon the colours, are the goods soured after bleaching.

It is the common practice to wash thoroughly after bleaching, then to scutch and dry. The water mangle is seldom used for this class of goods, and the "blueing" is generally carried out simultaneously with the stiffening.

Bleaching of Mulls.

In order to preserve the colour of the "headings" in bleaching mulls the method described for coloured goods has to be somewhat modified.

The pieces, after having been stitched together, are run through a washing machine into a large wooden cistern, the *steeping tank.* In this the cloth is plaited down, but the coloured headings are kept outside, *i.e.*, they are allowed to hang over the side of the steeping tank. The cistern is now filled with water, which is heated to a temperature of about 160° F. The cloth is allowed to remain in the steeping tank overnight. The starches are much more completely destroyed if either a small quantity of sulphuric acid or Diastafor is added to the water in the steeping cistern.

The boiling and bleaching operations are the same as described under "Coloured Goods." The third boil is, however, always omitted.

It should be stated here that the coloured headings must always be kept outside, not only during boiling in the kier, but also during souring and chemicking in the cisterns. When the mulls have been finally washed they are usually blued in the squeezer, and in order to prevent fraying of the threads they are scutched by hand.

The following method of bleaching piecegoods with coloured borders and headings, such as Dhooties, towels and handkerchiefs, has been taken from *The Chemistry and Practice of Finishing*, by Percy Bean and W. McCleary:—

Stamping.
Singeing (for certain kinds only).
Wetting out in hot water. Allow to lie 10 hours.
Washing.
Boiling in low-pressure kier for 8 hours with 1 lb. soda ash and ½ lb. soft soap per 112 lbs. of cloth.
Washing.
Souring, for 2 hours with sulphuric acid, 0·75° Tw.
Washing.
Boiling, for 8 hours with ¾ lb. soda ash and ½ lb. soft soap per 112 lbs. of cloth.
Washing.

Chemicking, for 4 hours with bleaching powder solution at 0·75° Tw.
Washing.
Antichlor. 2 hours in a solution of 2 ozs. of sodium thiosulphate per gallon.
Washing.
Squeezing.

Lunge recommends the use of hydrogen peroxide in place of antichlor (D.R.P. 34, 436).

The following information is of interest as regards working with *Mather Kiers*. It has been taken from *Der Zeugdruck*, by A. Sansone; the method is practised in the works of De Angeli & Co., of Milan:—

1. Washing.
2. Steeping in a cistern.
3. Souring in a machine with sulphuric acid at 3½° Tw.
4. Steeping of the soured goods in a cistern.
5. Washing.
6. Impregnating with caustic soda lye, 2° Tw.
7. Goods plaited into the waggons.
8. First boiling in Mather kier for 6 hours, at a pressure of 10 lbs., with 40 lbs. caustic soda, 20 lbs. rosin, 200 gallons of water, for 2,500 lbs. of cloth.
9. Second boiling, for 2 hours, at 7½ lbs. pressure, with 30 lbs. soda ash and 140 gallons water.
10. Washing in kier with hot water for ¾ hour.
11. Washing with cold water in kier. Waggons are now taken out of the kier.
12. Squeezing.
13. Chemicking with bleaching powder solution at 0·35° Tw.
14. Steeping in a cistern for 3 hours.
15. Souring in a machine with sulphuric acid at 3½° Tw.
16. Steeping in a cistern for 2 to 3 hours.
17. Washing.
18. Squeezing.
19. Plaiting into a cistern.
20. Scutching and drying.

Dr. F. C. Theis, in *Die Strangbleiche baumwollener Gewebe*, gives the following interesting details as regards working a bleaching concern with Mather kiers for a weekly production of 63,000 kilos. of cloth :—

1,950 kilos. caustic soda.
900 kilos. bleaching powder.
320 kilos. rosin.
690 kilos. hydrochloric acid.
2,900 kilos. sulphuric acid.

Men required :—

1 foreman.
1 storekeeper.
10 men for grey-room and singeing.
22 men in the bleach croft.
6 men for the drying machines.

Cotton piecegoods which have been boiled in the open-width have to be treated in an *Open-width Washing, Souring and Chemicking Machine.*

A machine used for this purpose is illustrated in Fig. 33 (Sir James Farmer & Sons, Ltd.). It consists of two wash tanks made of pitch pine, each of which is divided into four compartments. The divisions are arranged in order to keep the liquor in the four tanks at four different levels, an overflow being provided in the lowest compartment. Each tank is also provided with a separate outlet valve. The sour tank is fitted with wooden rollers with acid-proof centres running in acid-proof bearings. From here the cloth passes into the second wash tank, and finally into the two chemic tanks. These are usually made of stone and fitted with earthenware rollers. The cloth is squeezed before entering each of the tanks, and also after leaving the last chemic tank and before being plaited down. Speed of cloth, about 65 yards per minute. Power required, 5 h.p.

Special Bleaching Processes.

Sodium hypochlorite, prepared either by electrolysing a solution of common salt (see p. 73), or by decomposing bleaching powder with sodium carbonate (see p. 72), or by passing chlorine gas into a solution of caustic soda, may be used in place of bleaching

powder solution, without materially altering the methods of bleaching already described. Such solutions penetrate the material more readily; they usually bleach at the beginning somewhat more rapidly, but the final result is identical with that obtained by employing bleaching powder.

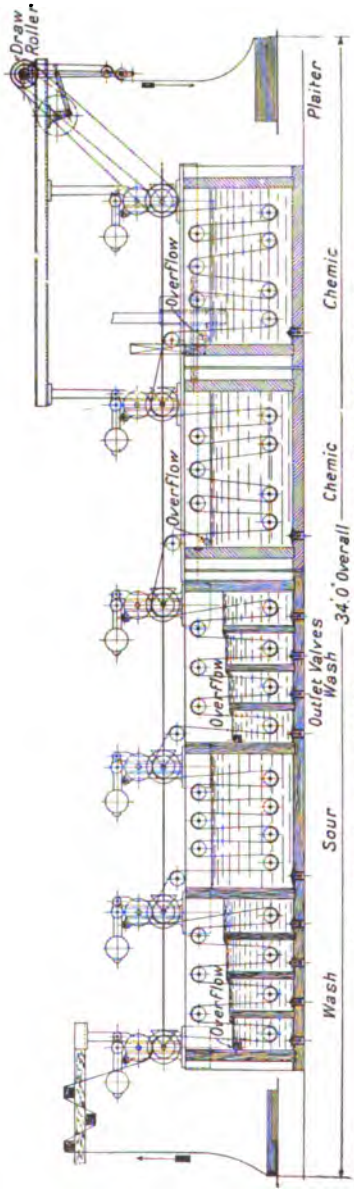

Fig. 33.—Open-width Washing, Souring and Chemicking Machine.

Many attempts have been made to dispense either partly or entirely with the boiling of the goods before bleaching. It has, for instance, been suggested to scour the goods with soda with the addition of Turkey-red oil, Monopole soap, and other substances. As far as the author is aware, the processes have not found any extensive application.

In order to make the action of the soda lye used in boiling more powerful, it has been suggested to add various ingredients to the lye.

Thies & Herzig impregnate the goods with a solution of about 10 lbs. of sulphuric, or 16 lbs. of hydrochloric acid per 100 gallons of water, with the addition of ½ lb. of hydrofluoric acid. This is followed by a passage through steam, in order to convert the starch and to remove compounds of silica, iron, and alumina.

H. Koechlin recommends the addition of reducing agents, such as sodium sulphite and bisulphite.

G. Hertel patented a process which consists in impregnating the cloth with Turkey-red oil, drying, boiling with caustic soda under pressure, souring, washing, soaping, rinsing, and drying.

G. Geisenheimer employs sodium silicate in conjunction with caustic soda lye in boiling.

G. Saget suggests a boiling liquor composed of lime, Turkey-red oil and sodium bisulphite.

A. Endler patented a method in which the cloth is impregnated with a solution of soda ash, common salt, and sodium bisulphite, and afterwards steamed in a continuous steaming apparatus.

The addition of benzene and toluene to the boiling lye was suggested by A. Mahieu.

Dr. Friedrich Carl Theis, in *Die Breitbleiche baumwollener Gewebe*, p. 167, gives a table from which the results obtained by these different methods may be seen.

The object of other processes consists in accelerating the action of the bleaching agent used.

G. Lunge was the first to suggest the use of acetic acid or formic acid for the purpose of liberating hypochlorous acid from bleaching powder.

Hadfield and Sumner patented a process in which the pieces are impregnated with a solution of bleaching powder, about 1° Tw., squeezed and then passed through a chamber containing acetic acid vapour; whilst in the Mather-Thompson bleaching process the pieces, after impregnation with the bleaching powder solution, are passed through a chamber containing carbonic acid gas.

Horace Koechlin suggested steaming of the goods after they have been passed through sodium hypochlorite and impregnated with caustic soda lye. The material is then once more passed through the bleaching agent, washed, soured, and washed. He also recommends impregnation of the pieces with calcium bisulphite, followed by steaming under pressure.

Bleaching with Potassium Permanganate.

Scurati Manzoni[1] suggests the following method for bleaching with potassium permanganate. The yarn is boiled under pressure with caustic soda, well washed, and then steeped for 5 hours in cold

[1] *Journ. Soc. Dyers and Colourists*, 1889, p. 98.

sulphuric acid, 7½° Tw., to which a concentrated solution of the permanganate is added in two or three different portions. The cotton is finally thoroughly washed. He states that ½ lb. of permanganate is required to bleach 100 lbs. of cotton yarn. Better results are obtained if, in place of steeping, the goods are kept moving all the time.

Another method consists in steeping the cotton in a slightly acidulated solution of potassium permanganate. The cotton is then taken out and passed through a bath containing bisulphite of soda or sulphurous acid.

Bleaching with Peroxide of Hydrogen.

Excellent whites may be obtained by bleaching with peroxide of hydrogen in place of bleaching powder. The cost is, however, practically prohibitive.

Horace Koechlin proposed the following method: The cloth is soured with sulphuric acid at 3° Tw., allowed to lie overnight, washed, and then boiled for 6 hours in

100 gallons water,
10 lbs. caustic soda,
30 lbs. soap,
8 lbs. calcined magnesia,
5 gallons peroxide of hydrogen (12 volumes strength).

The goods are now washed, soured with sulphuric acid, washed, and dried.

Königswarter and Ebell recommend the following method for bleaching with hydrogen peroxide:—The goods are boiled in a high-pressure kier with caustic soda, washed, squeezed, and steeped for 8 to 12 hours at 60° to 80° F., in a bath containing

100 gallons peroxide of hydrogen,
2 gallons ammonia,
50 to 100 gallons water.

The goods are finally squeezed and dried in a place in which they are exposed to air and light, as much as possible.

Another method consists in bleaching the goods, after boiling, first with a weak solution of sodium hypochlorite, and finally with peroxide of hydrogen.

Bleaching with Sodium Peroxide.

The use of sodium peroxide in place of hydrogen peroxide has been recommended by Königswarter and Ebell.

In preparing the bleaching liquor the following points must be observed: The tins containing the sodium peroxide should only be opened when required; the contents must not be exposed to the air. It should be added slowly, and in small quantities at a time, to cold water with continuous stirring. If the water becomes hot, cooling will be necessary. The vessels used in bleaching should be made either of wood, enamelled iron, or lead. It is best to use soft water. The bleaching liquor should react slightly alkaline.

The following method gives the best results:--

30 lbs. of magnesium sulphate are dissolved in
95 gallons of water. To this add
10 lbs. of sodium peroxide, and finally
12½ lbs. sulphuric acid, 168° Tw.

The bleaching is best conducted at 100° to 115° F., for 1 to 10 hours. The goods are finally soured with sulphuric acid, washed, and dried.

In order to reduce the loss of available oxygen as far as possible, the sodium peroxide should be added to the acidulated water, and finally the other additions should be made.

Bleaching with Sodium Perborate.

A very powerful bleaching agent which has been introduced within the last few years is sodium perborate.

The following method is used in some places with success: The goods are first boiled with caustic soda in a high pressure kier, and afterwards in an open kier, which has been well lime-washed, with about 1 per cent. of sodium perborate.

Bleaching with Ozone.

Ozone has been tried as a bleaching agent for cotton. Satisfactory results have been obtained by exposing the material first to the action of ozone, and by treating it afterwards with a solution of hypochlorite. The method has, however, been found too expensive.

Washing of Cotton Piecegoods.

Cotton piecegoods may either be washed in the form of a rope in *Rope* or *Strand Washing Machines*, or in the full width in *Open-width Washing Machines*.

One of the oldest and simplest washing machines in which the cloth is thoroughly cleansed, and at the same time gently treated

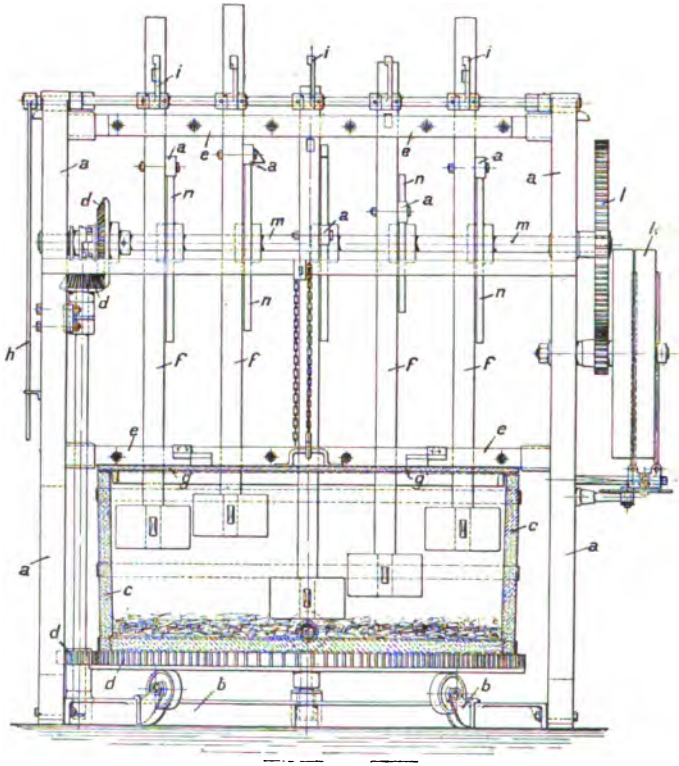

Fig. 34.—Washing Machine.

and rubbed, is the *Wash Wheel*. It consists of a wooden cylinder usually bound with iron hoops, the inside of which is divided by means of wooden partitions into four compartments, each of which is provided with a manhole through which the cloth is placed into the machine. Water is introduced into the compartments through the hollow axle, and small holes are provided in the outer wall of the drum through which the dirty water flows

away. The wheel revolves slowly, and the cloth being thrown about in the compartments, is rubbed and thoroughly cleansed. The Wash Wheel is particularly suited for washing delicate fabrics and for cloths with coloured headings (Turkish towels, etc.).

A *Washing Machine* in which the cloth is hammered by means of wooden fallers is built by Haubold, and illustrated in Fig. 34. It consists of the framework *a*, which is held together by means of the iron stays *b*, upon which rests the slowly revolving

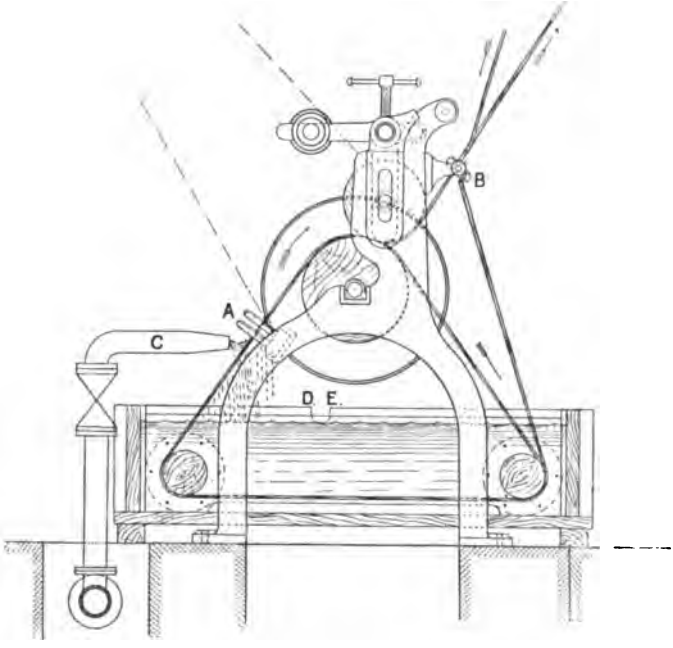

FIG. 35.—Rope Washing Machine (transverse section).

trough *c*, and the driving gear *d*. The upper stays *e* are made of wood, and contain the guide holes for the fallers *f*. The trough is covered with the lid *g*, which prevents the liquor from splashing about. When charging the machine with cloth, the fallers *f* are lifted by means of lever *h*, and held in position by catches *i*. The machine is driven by means of pulley *k* and the cogged wheels *l*. The different wipers for lifting the fallers *f*, by means of the small rollers *o*, are placed on the wiper-beam *m*. The wipers are arranged so as to allow the fallers to come down on

to the cloth alternately, and further in such a manner that the time which elapses between the falling down of the fallers nearer the centre of the machine is longer than that for the fallers further away from the centre. The machine may also be used for washing and blueing yarn, similar to the *Wash Stocks*, which latter may also be employed for washing cotton piecegoods.

A modern type of *Rope-Washing Machine* is illustrated in

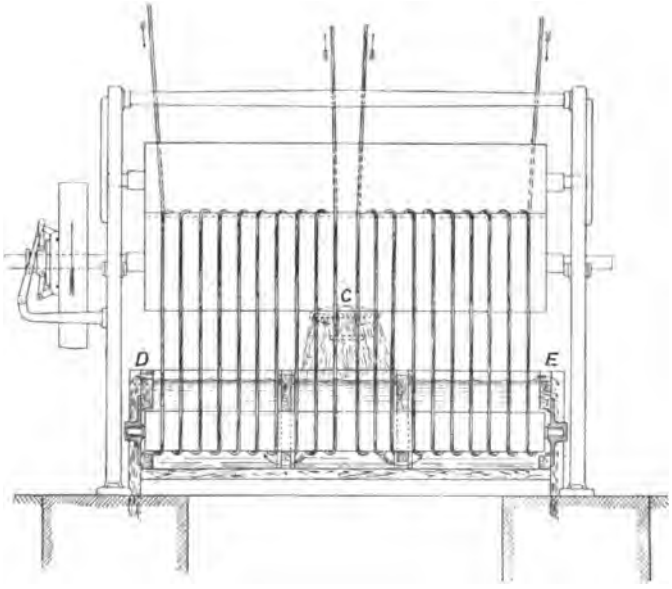

FIG. 36.—Rope Washing Machine (sectional elevation).

Figs. 35 and 36 (Messrs. Mather & Platt). The shallow horizontal trough is divided into three compartments by two transverse partitions with openings at the bottom. Two strands of cloth pass through the machine at a time, one entering at each end and both being delivered at the centre. In order to guide the cloth spirally through the machine, pegs A, made either of hard wood or of porcelain, are provided. The strands are repeatedly squeezed by means of a pair of heavy wood bowls, made of beech or elm, 18 inches to 24 inches diameter and 8 feet 3 inches wide on the face. A very thorough washing with a minimum amount of water is effected in this

type of machine, it being worked on the counter-current principle. A large quantity of water is delivered through a 4-inch supply pipe C, against the outgoing cloth. The water passes then from the middle compartment of the trough under the partitions into the two outer compartments, and it finally overflows at D and E, at each end of the trough, where the dirty cloth enters the machine. It should also be mentioned that the pot-eyes B, through which the cloth enters the machine, can be rotated in order to put more or less tension on the cloth.

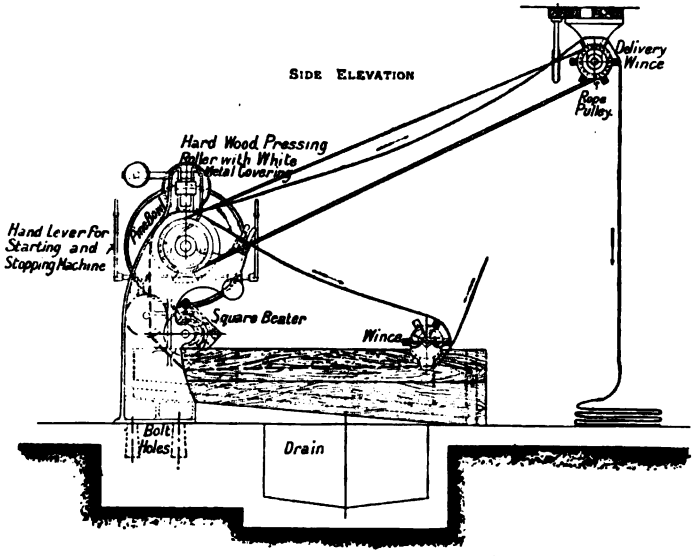

Fig. 37.—Square Beater Washing Machine.

The cloth passes through the machine at a speed of 200 yards per minute; thus 400 yards of cloth are washed per minute. 8 b.h.p. are required to drive the machine.

Cloth which has been dyed with Alizarine dyestuffs, and which, therefore, requires a very thorough washing, is best treated in a *Square Beater Washing Machine* (Mather & Platt) (Fig. 37). The wood bowl is 20 inches diameter and 10 feet wide on the face. The machine is provided with a square wood beater, which effectively beats the cloth and opens it out as it passes along the surface of the water. Generally one strand of cloth is washed in the machine at a time, it entering at one

end of the trough whilst it leaves at the other end, where it passes through a squeezing nip before being delivered over the piling wince. The water is supplied through a 4-inch water inlet valve, and the cloth passes through the machine at a speed of 110 yards per minute. Power required to drive the machine, 8 b.h.p.

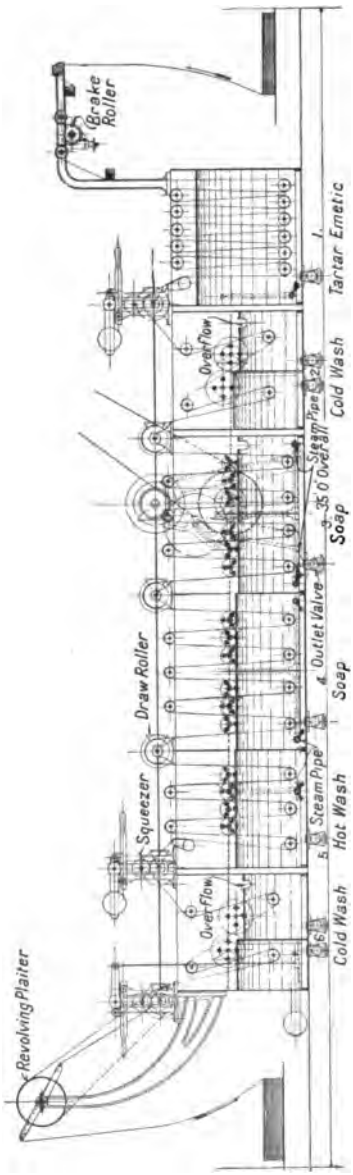

FIG. 38.—Open Soaper.

The *Open Soaper.*—The ordinary types of washing machines are, in some instances, not sufficient for washing certain shades or for cleansing the fabrics after mordanting. In these cases the open soaper type of washing machine, in which the soap solution or the water is powerfully thrown against and through the fabric, by means of *beaters*, may be employed with advantage. The open soaper may also be used for chroming, washing, and soaping Aniline blacks and for developing and soaping Para-red, etc. Fig. 38 illustrates one of these machines built by Messrs. Sir James Farmer & Sons, Ltd. It consists of six tanks, of which the first one may be employed for fixing tannic mordants with tartar emetic, whilst the second tank usually contains cold water, the third, fourth, and fifth tanks soap solution or hot water, and the sixth tank cold water. A levered squeezer, with a balanced opener, which

opens out the cloth and keeps it in the centre of the machine, is provided between the first and second tank, whilst draw rollers are fixed between the cold water, the soap, and the hot water tanks. After leaving the last hot water tank the cloth passes through another squeezer, provided with balanced opener, into the last cold water tank, and from here ultimately through a compound levered squeezer with scrimp rails. The necessary steam pipes, as well as the overflow pipes, are shown in the drawing.

The water in the cold water tanks is kept on two levels with a four-gutter beater on each level. The manner of threading the cloth through the machine is such as to subject the cloth to the action of the beaters on both sides. Each compartment of the soaper is fitted with a plug-tap regulated so that part of the liquor can be drained from the bottom of the tank, whilst the other part overflows over partition plates and finally through a gutter overflow. This arrangement makes it impossible for any floating matter to accumulate. In the soap tanks two sets of 3-inch beaters are inserted between the folds of the cloth. The object of this is to secure as great a length of cloth in the liquor as possible. The tank is divided by means of a partition plate into two compartments, and when two or more tanks are coupled together the liquor passes from one tank into the next, and so on. Whilst the beaters are driven direct, change-speed gear is used for the cloth in order to enable both light and heavy fabrics to be treated in the same machine. Owing to the action of the beaters the weft is kept straight, no creases are formed in the cloth, and the elasticity of the movable gutters prevents rubbing of the surface of the fabric.

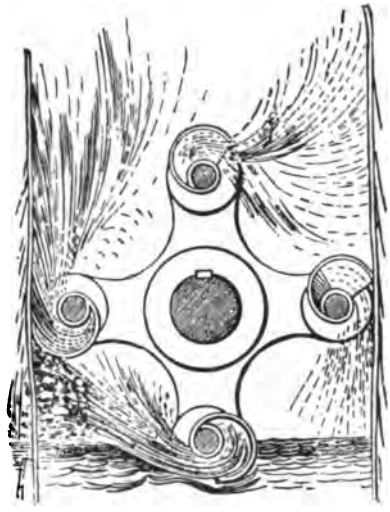

FIG. 39.—Farmer's Patent Beater.

The cloth may be passed through the machine at a speed

varying from 25 to 60 yards per minute. Power required, 12 h.p.

The *Patent Beater*, as used in the cold water tanks, is shown in Fig. 39. It consists of four copper gutters soldered on stiff steel rods, the ends of which are carried loose on spider wheels keyed on the beater shaft. The beater revolves at a great speed in order to cause the gutters to fly out by centrifugal force. When at the lowest point they partly dip into the water, they become filled, and when coming into contact with the cloth discharge the liquor with considerable force against it, and in the case of a thin fabric, actually through it. A perfectly uniform

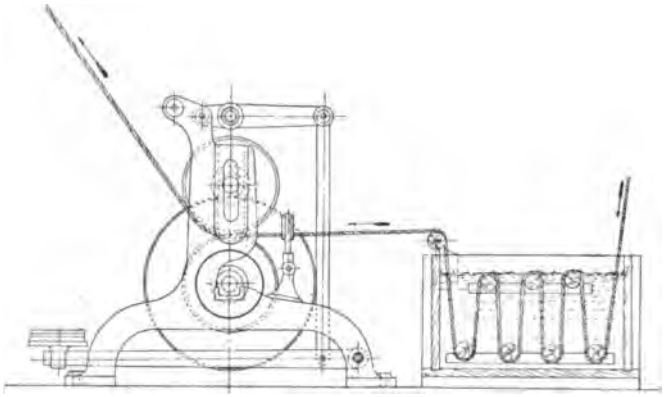

FIG. 40.—Squeezer.

elastic beating and flushing action is thus produced on the whole width of the cloth. The beaters in the hot water and soap tanks are of similar construction. They are, however, usually smaller in diameter, and provided with three, in place of four gutters.

The bleaching operation having been completed, the cloth passes now in the rope form through the *Squeezer*, illustrated in Fig. 40 (Mather & Platt). The machine is fitted with two bowls about 20 inches diameter by 18 inches wide, one of which is made of compressed cotton, the other of brass or cocoanut fibre. Two strands of cloth pass through the squeezing nip at a time, and pressure is applied to the bowls by means of compound levers and weights. A trough with guide rollers

is provided in front of the squeezer, through which the cloth passes. This trough may contain water or weak alkali (ammonia) in order to neutralise any traces of acid which may

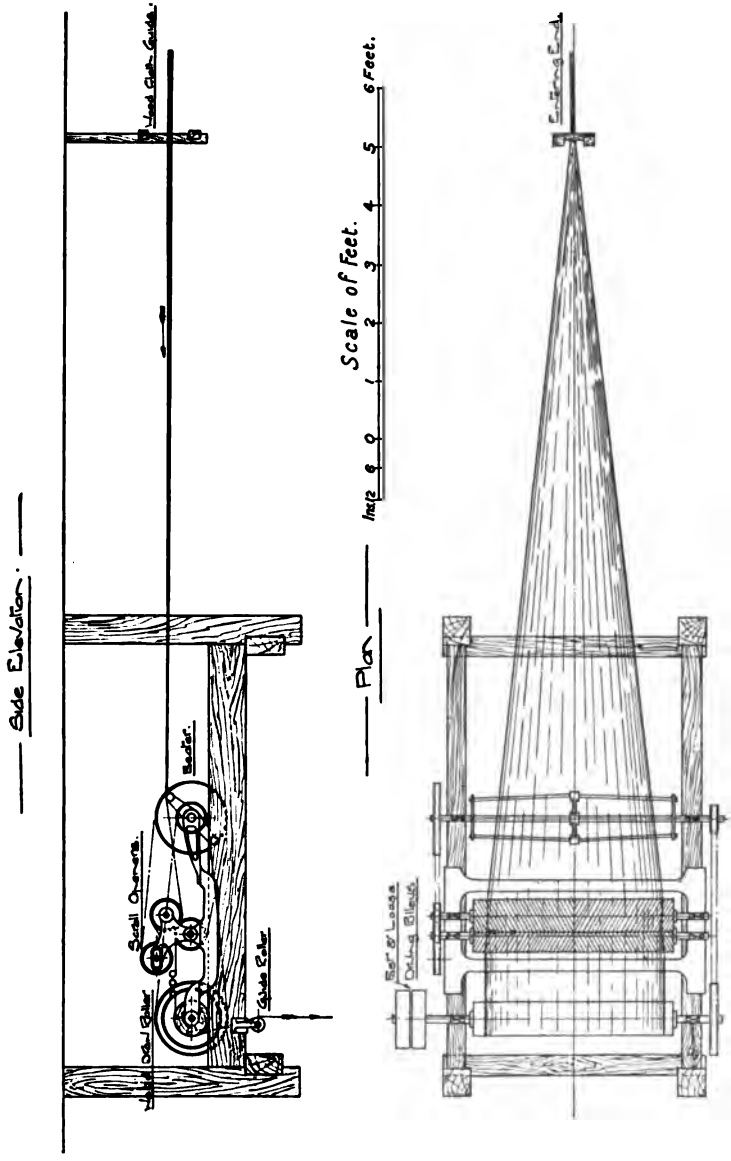

FIGS. 41, 42.—Scutcher.

have been left in the cloth, or it may be charged with a "blueing agent" if the white has to be "blued." Each strand passes through the machine at a speed of about 200 yards per minute. Power required, 6 h.p.

The cloth after leaving the squeezer, being still in the rope form, has to be opened to its full width before it can be dyed or dried. Formerly the opening out was entirely performed by hand. As pointed out under "Bleaching," this is still practised with certain kinds of fabrics.

With the exception of these, the work is, however, now universally performed by a machine known as *Scutcher*, shown in Fig. 41 and Fig. 42 (Mather & Platt). Before entering the scutcher, the strand of cloth is run horizontally for a distance of about 30 to 40 feet. The cloth now meets the beater, a frame fitted with tubular brass bars which strike against the cloth, revolving in the direction opposite to that in which the cloth travels. By means of this beating action the twist is taken out of the cloth. It now passes between rollers revolving in the direction opposite to that of the cloth, which are covered with raised copper spirals. The threads of these spirals run right and left hand from the centre, and by means of these the cloth is still further opened out. The cloth is finally delivered over a draw roller directly to the drying cylinders or to the *Water Mangle.*

A further portion of the water contained in the cloth may be removed by passing it through a *Water Mangle*, in which the cloth is evenly squeezed. The water-mangling also influences the finishing operations to a very considerable extent. Mangles consisting of from three to six bowls are usually employed. Figs. 43 and 43A illustrate a *Six-bowl Mangle* of Messrs. Sir James Farmer & Sons. In this mangle bowls of brass and cotton are arranged alternately, and pressure is put on the bowls by means of compound levers. The machine is driven by means of a two-speed gear, the fast speed being obtained by putting in gear the friction clutch which drives direct the shaft on which is keyed a spur pinion, which gears with the spur wheel on the end of the brass driving bowl. For the slow-speed the friction clutch is disengaged and the claw-clutch put in gear. Connecting wheels are provided between the driving bowl and the brass bowl next to the top, in order to

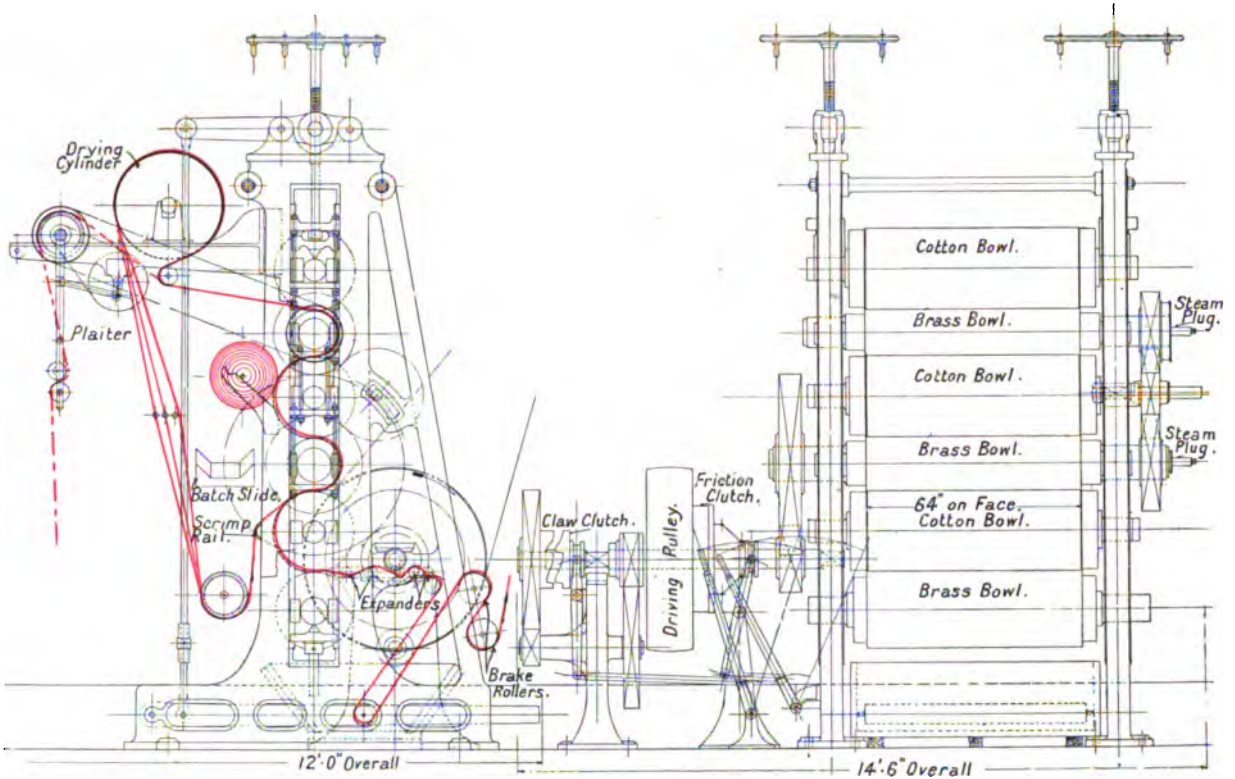

FIGS. 43, 43A.—Six-Bowl Water Mangle.

eliminate any slipping. The cloth enters under and over the two break-rollers, and it then passes into the water box. This may contain the necessary "blueing solution," if the cloth is finished after mangling.

From here the cloth travels to the five-bar expander and then into the nip, and finally to the plaiting arrangement. In this type of mangle the cloth may also be threaded in such a manner as to allow "*chasing*," *i.e.*, passing a number of layers of cloth through the nips at the same time. The cloth, in place of passing through the plaiter, is taken from the top nip round a special drying cylinder, through the separating bars down to an adjustable roller, and then over the scrimp-rail into the nip. This operation is repeated until the necessary number of laps have been obtained. The cloth is finally batched against the second cotton bowl. The two top brass bowls may be heated by steam. The cloth passes through the water mangle at a speed of about 80 yards per minute, and the power required to drive the machine is 20 h.p.

Drying of Cotton Piecegoods.

After water-mangling the cloth is ready for dyeing, finishing, or drying.

The number of cylinders employed for drying the cloth varies. Frequently as many as thirty cylinders are used. The cloth is passed through the *Drying Machine* in such a manner that its two sides come alternately into contact with the surfaces of the cylinders. The cylinders may be arranged either in vertical stacks, or they may be placed horizontally. The former arrangement requires less floor-space, but the latter is more convenient to work, because the cloth can be under observation practically during the whole of the time. Fig. 44 illustrates a *Vertical Drying Machine*, with sixteen cylinders, arranged in two stacks of eight cylinders each, built by Sir James Farmer & Sons.

The frames are made hollow with the necessary arrangements for carrying the drying cylinder stands, brackets, etc. The drying cylinders are usually made of copper, but if the initial cost is a serious consideration they may be made of tinned iron. The cylinders are provided with air valves in order to prevent

the possibility of collapse and with internal buckets, by means of which the condensed water can be completely removed. In the early types of machines the bodies of the cylinders had joints across the face. The earliest method of jointing consisted in dovetailing the sheet of copper together and brazing with brass spelter. The spelter used is harder and more brittle than the copper sheet, and consequently whilst the brazed seam is being filed the corners are apt to be broken. Thus a leakage may be caused, which although only slight and hardly

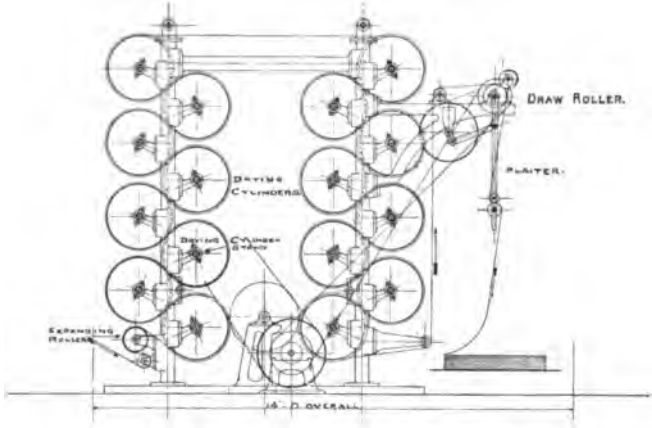

FIG. 44.—Vertical Drying Machine.

noticeable, may result in considerable damage being done to the cloth.

The same disadvantages apply to the riveted seam, and in addition it has another serious drawback in that the seam is thicker than the remainder of the body of the cylinder. The cloth is, therefore, unevenly dried, and this may give trouble when drying dyed goods. These difficulties are overcome by making the drying cylinders out of seamless copper shells. Such cylinders can be worked at higher pressures with very little risk.

The steam is admitted into the vertical hollow framing of the machine, and it then passes through the drying cylinder stands into the cylinders. The condensed water is delivered into the hollow framing on the opposite side, which is connected to a steam trap.

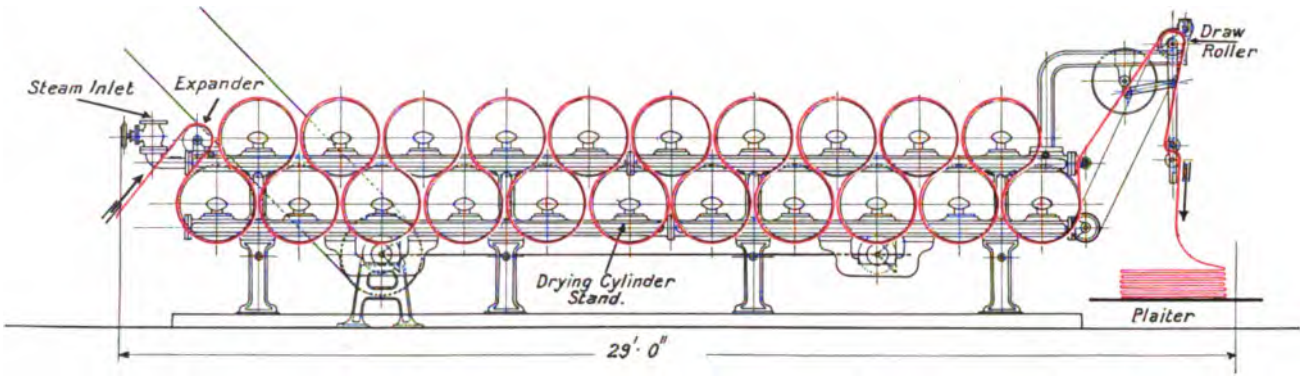

FIG. 45.—Horizontal Drying Machine.

UNIV. OF
CALIFORNIA

The cylinders are driven by means of fast and loose pulleys, the drive passing along the driving shaft to the spur pinion at its end. This drives a larger spur wheel which in its turn engages with the spur wheel on the first cylinder of each stack, from which the other cylinders are driven. The usual working pressure of drying cylinders is from 10 to 15 lbs. per square inch. With this pressure a drying cylinder of 22 inches in diameter is capable of drying about 3 yards of cloth per minute. The machine shown in Fig. 44 is capable of drying about 48 yards of cloth per minute, and it requires 6 h.p. to drive it.

A *Horizontal Drying Machine*, with twenty-one cylinders, is shown in Fig. 45. The construction of the machine is practically the same as that of the vertical type. The machine is driven

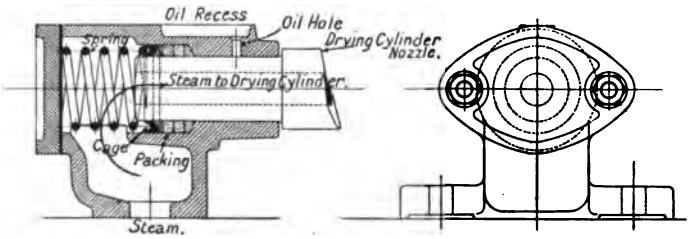

FIG. 46.—Drying Cylinder Stand with Gray's Patent Spring Packing.

in two places. On the end of the driving shaft is a spur pinion, which drives the front half of the machine, a longitudinal shaft receiving its motion by means of bevel wheels from the driving shaft and transmitting the power through another pair of bevel wheels to a short driving shaft, which carries a spur pinion. This pinion gears with one of the spur wheels on the drying cylinders, and so drives the back half of the machine. On the machine shown the cloth can be dried at a speed of 63 yards per minute. Power required, 7 h.p.

It will perhaps be of interest to explain the principle of the *drying cylinder stand* or *doll head*, illustrated in Fig. 46, in which *Gray's Patent Spring Packing* is employed, which constitutes a considerable improvement over the older methods of packing.

The steam enters into the steam chamber from below, immediately at the end of the drying cylinder nozzle, from

where it passes along the central hole in the nozzle into the cylinder. Loss of steam is prevented by means of the spring keeping the cage always up to the packing.

A modern drying machine, the *Cell Dryer*, is illustrated in Fig. 47 (Messrs. Samuel Walker & Sons, Ltd.).

In place of the drying cylinders stationary *steam chests* (*cells*) are employed in this machine, over which the cloth passes at a rapid rate. Steam of up to 40 lbs. pressure per square inch may be introduced into the "cells." The cloth may be run through the dryer at a speed of 200 yards per minute. The machine seems to give satisfactory results, particularly when employed for the drying of bleached goods.

Drying of the fabrics by means of cylinders, as described, does not always give the desired result, because the fibres lose their elasticity, the cloth always shrinks more or less in width, the threads become flattened, and the characteristic structure of the fabric often suffers. In order to overcome these difficulties the cloth is dried in a stretched condition by means of hot air. For this purpose *Stentering Machines* of considerable length are employed.

A *High-Speed Starching and Stentering Range with Jigging Motion for Elastic Finishes* is shown in Fig. 48 (Mather & Platt, Ltd.). The range comprises a mangle, the trough of which contains the starch or other filling or softening material. After impregnation the excess of material is squeezed out by means of two bowls of 8 inches to 9 inches diameter, one of which is made of brass, the other of rubber or of sycamore (20 inches diameter). From the mangle the cloth passes on to a six- or eight-cylinder drying machine, on which it is partially dried before passing on to the stentering machine. Between the drying cylinders and the stentering machine is a compensating apparatus A, by means of which an even tension is kept on the cloth. In machines in which the mangle and the drying cylinders are driven from separate electric motors, or by a separate steam engine, the sliding roller actuates the steam-supply valve of the engine or the speed-regulating switch of the motor. The cloth passes now to the point B, at which it enters the stenter, the clips of which automatically grip the cloth at the selvedges, gradually stretching it out to the width required. The stenter is usually about 90 feet long between the centres of the chain

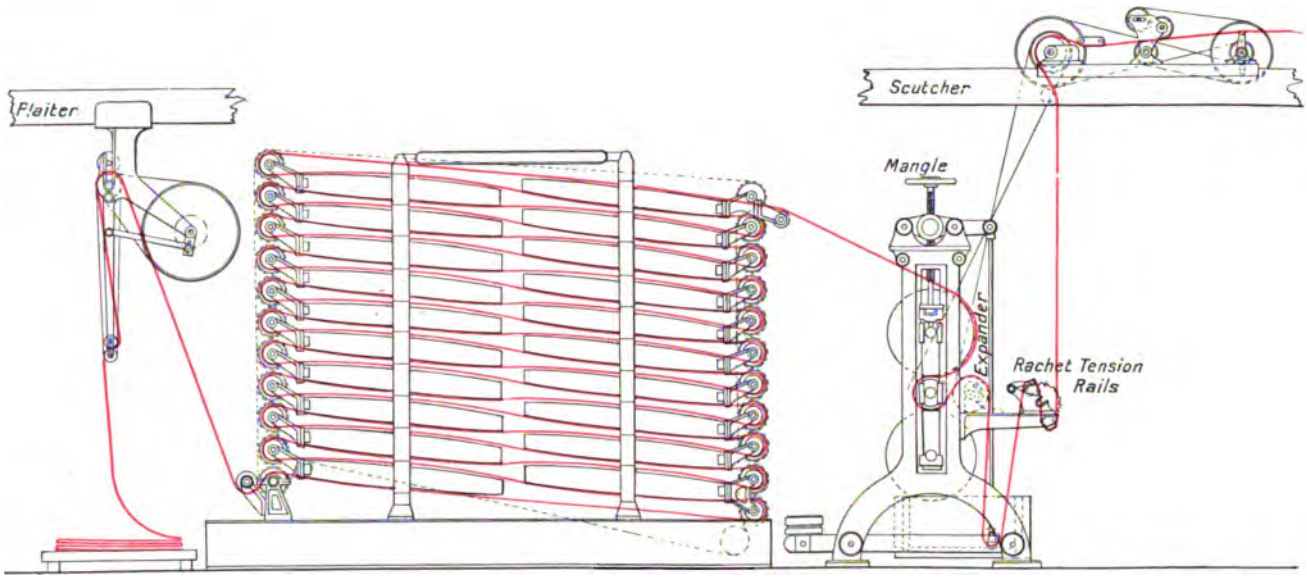

FIG. 47.—Cell Dryer.

UNIV. OF
CALIFORNIA

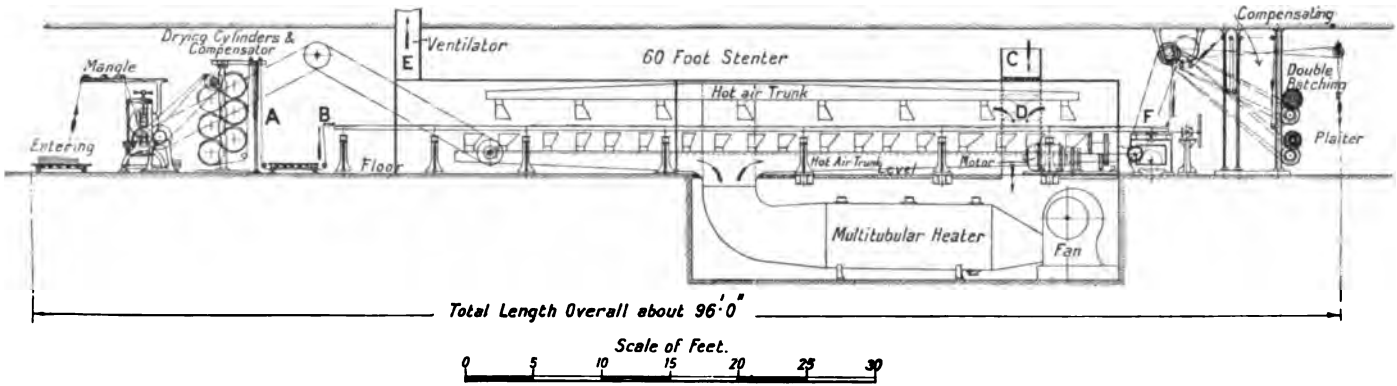

FIG. 48.—High-speed Starching and Stentering Range with Jigging Motion for Elastic Finishes.

UNIV. OF
CALIFORNIA

wheels. During the passage of the cloth over the stenter air is blown against it by means of a powerful blowing fan through adjustable mouthpieces placed both above and below the cloth. The air is heated by means of a high-pressure multitubular heater with 2,300 square feet of heating surface. The stenter is housed in a wooden enclosure, and the fan draws the air partly from outside at C and partly from the delivery end of the enclosure at D. Thus by re-using the hot air, which contains only a small amount of moisture, considerable economy in working the range is obtained. The moist air is expelled at the entering end at E, and in order to prevent it from mixing with the dry air at the delivery end of the stenter, a

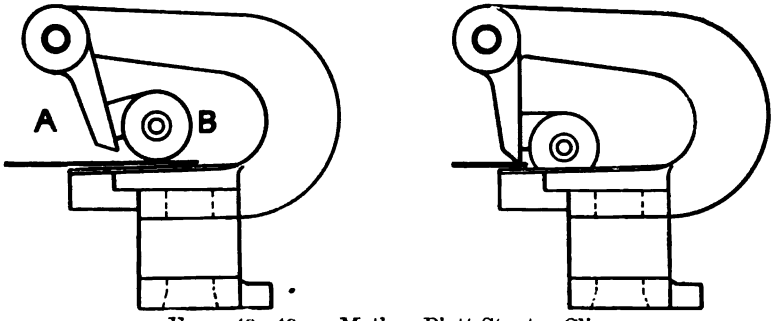

FIGS. 49, 49A.—Mather-Platt Stenter Clip.

partition is placed across the chamber near the middle of the stenter.

The stenter is also provided with an arrangement for straightening the weft threads, and further, with *jigging motion* for the production of "elastic" or "batist" finishes.

The cloth is ultimately automatically released from the stenter clips, and it may finally be conducted over a drying cylinder in order to complete the drying of the selvedges. It is then either plaited down or batched. The plan shows the fan and the heater in a pit directly underneath the stenter, but, if more convenient, they may be placed either on one side or at the end of the machine. The fan delivers from 20,000 to 25,000 cubic feet of air per minute, and it requires a power of 20 h.p. The heater is 5 feet in diameter by 12 feet long, and works at pressures up to 60 lbs. per square inch. Sateens of average weight may be dried at a speed of about 100 yards per minute, but when

jigging, at 40 to 60 yards per minute. Power required to drive: the range, 18 h.p.; the jigging motion, 4 h.p.

Figs. 49 and 49A illustrate the *Mather-Platt Stenter Clip*, which is of interest on account of its simplicity of construction and accuracy of work. In Fig. 49 the clip is shown in the position when the cloth enters. The pulley B resting on the cloth, the hinged tongue A cannot yet grip it. As the chains gradually diverge the cloth is drawn more and more out of the clip until the selvedges pass from underneath the pulley B, which now falls into a slot in the clip plate. The clip then falls on to the cloth and holds it securely, as shown in Fig. 49A. The clips are released at the delivery end of the stenter by a simple cam.

Fig. 50 shows the plan of a *Small Bleach Works* for cotton piecegoods, prepared by Messrs. Sir James Farmer & Sons.

The Bleaching of Linen.

Compared with cotton, the flax fibre contains a much larger amount of impurities, consisting chiefly of pectic substances, soluble in caustic soda. Linen is also more readily attacked by boiling and bleaching agents, and the bleaching process has, therefore, to be considerably prolonged.

The earliest method of bleaching is the *grassing*, *i.e.*, exposing the material in the fields to the action of air, light and moisture.

Bleaching without bleaching powder, by means of grassing alone, is now, however, rarely practised, though the material is usually exposed in the fields for short periods during the bleaching process.

The old method of bleaching consists of about twenty-five different operations. The material is first treated four times with soda lye and exposed in the fields after each treatment. Water is usually sprayed on the linen, from time to time, during grassing. In some places, however, it is not watered but allowed to become dry.

The first of the four treatments is carried out with a very weak lye and at a low temperature. A stronger lye is used and the temperature is gradually raised for each subsequent treatment. The fourth *bowking* with lye is followed by souring with sulphuric acid for 12 hours, and washing. The goods are now bowked for

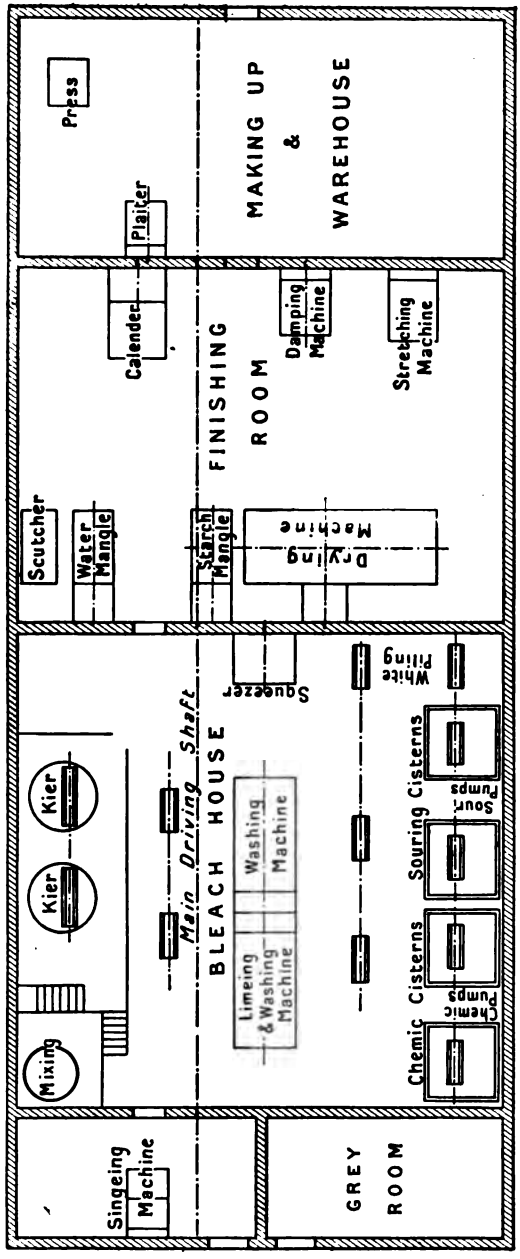

FIG. 50.—Plan of Small Bleach Works.

the fifth time with boiling soda lye for about 8 hours. After this follow grassing, bowking, grassing, souring, washing, bowking, grassing, souring, washing. The goods are now bowked for the eighth time and finally washed.

The so-called *brown Holland* is usually obtained by treating the linen pieces with a warm solution of stannous or titanous chloride with the addition of sulphuric acid. As stated below, the greatest care must be exercised in finally washing the linen absolutely free from acid.

Bleaching of Linen Yarn.

A "full bleach" is not always required in the case of linen yarns. It is in some cases sufficient to boil the yarn in caustic soda lye, to wash and to sour with sulphuric acid. It should be pointed out that the washing after the souring of linen should be very thorough. The linen fibre seems to retain the acid much more strongly than the cotton fibre. In many cases it has been found by far the safest method to pass the linen after washing with water through hot water containing a small quantity of ammonia.

The different grades of bleaching linen yarn are: *Half white* or *cream, three-quarters white,* and *full white.*

Linen yarns lose from 10 to 20 per cent. in weight during bleaching.

A good white may be obtained according to the following method:—

1. *Boiling.*—Boil with 10 per cent. of soda ash for 6 to 8 hours, or better with soda containing 20 per cent. of caustic soda. Run off the lye, and wash, first with hot and then with cold water.

2. *Chemicking.*—*Reel* the yarn for about 1 hour in bleaching powder solution at ½° Tw. The operation of reeling is applied to linen yarn only. The machine consists of a shallow stone trough. The hanks are placed on square wooden rods, which are then placed upon the framework above the reeling trough. Each of the wooden reels is provided with a toothed wheel by means of which the reels are slowly turned. Provision is made for reversing the reels. A small portion of the hank only is immersed in the bleaching solution whilst the remainder is exposed to the air. The bleaching is considerably accelerated by the action of the carbonic acid in liberating hypochlorous acid.

3. *Washing.*—The yarn is now washed, usually by hand, or, in large works, in washing machines.

4. *Souring.*—The yarn is steeped for about 1 hour in sulphuric acid, 1° Tw.

5. *Washing.*

6. *Boiling* (*Scalding*).—Boil for 2 to 3 hours with 2 to 4 per cent. of soda ash.

7. *Washing.*

8. *Reeling* in bleaching powder solution (as in 2).

9. *Washing.*

10. *Souring* with sulphuric acid ¾° to 1° Tw. The yarn should now be a *half white*. It is finally thoroughly washed and dried.

If a *three-quarters white* is required the yarn is not dried after washing, but boiled again as in 6. It is then grassed for about a week, and after this steeped in a bleaching powder solution (the *dip*) of about ¼° Tw, after which it is again washed, soured and washed.

For the purpose of obtaining a *full white* these operations are repeated once or twice. The bleaching powder solutions used for the second and third *dip* are usually much weaker than those used in the first *dip*, and correspondingly less soda ash is employed in *scalding*. The time of *grassing* between the operations depends very much upon the weather.

Linen yarn used in the manufacture of fine fabrics should always be boiled with soda before weaving.

Bleaching of Linen Piecegoods.

The following method, practiced in the North of Ireland, for bleaching linen pieces is given in *A Manual of Dyeing*, p. 129.

The pieces are first thread-marked with Turkey-red thread, sewn together end to end, run through lime-water so as to take up 5 to 12 per cent. *CaO*, and are then boiled for 8 to 12 hours in low-pressure kiers. After liming they are washed in a rope-washing machine. The pieces are now separated and made up into bundles, and remain so through all the subsequent processes; very light pieces are bleached throughout in the rope form. The goods are now washed in *wash-mills*, similar in construction to the *wash-stocks* used for cotton yarn, allowed to drain, and soured in hydrochloric acid at 1½° to 2° Tw. overnight, after which they are taken out, allowed to drain and again mill-

washed. Next follow the lye-boils, which are also effected in low-pressure kiers; according to the quality of the cloth, two to six boils are given for 6 to 10 hours each, using a mixture of 1 part caustic soda and 3 parts soda ash at strengths varying from 6° to 4° Tw. In winter the lyes are taken slightly stronger than in summer. At certain stages between the boils the goods are *grassed* for two days, and in some cases *rubbed*.

With very closely-woven cloth they are frequently soured in sulphuric acid before the last boil. As a general rule light goods require two to three boils, medium goods three boils, and heavier and closely woven goods four to six boils, according to the time of the year.

After the lye-boils the goods are alternately treated with hypochlorite of soda and weak soda-boils for three to five times, until sufficiently light in colour. Each of these series constitutes a *turn* or *round*.

During these latter stages the cloth also undergoes the process of *grassing* between each *turn*, and in some cases *rubbing* before the last soda-boil.

The cloth is then steeped in large vats or *kieves* (*dipping* or *chemicking*) in very weak hypochlorite of soda, varying from $\frac{1}{10}$ per cent. chlorine for first dip to $\frac{1}{50}$ per cent. chlorine for last dip. After each dip the goods are soured in sulphuric acid varying from 2° to 1° Tw., and they are ultimately drawn by hand, allowed to drain, and mill-washed.

The lye-boils after the first dip are known as *scalds*; they are carried out in the same kiers as the lye-boils, but only for 3 to 4 hours, the strength of the lye being progressively weaker (from 3° to $1\frac{1}{2}$° Tw., for last scald). From time to time the goods are *turn-hanked i.e.*, each piece is re-hanked into a fresh bundle, so as to ensure every part of the web being treated equally.

The *rubbing* has for its object the removal of small black specks, called *sprits*, and is carried out by means of a special machine consisting of two or three pairs of heavy corrugated rubbing boards of which the lower ones are rigid whilst the upper ones receive a to-and-fro motion lengthwise. The pieces are usually first steeped into a strong soap solution and then passed lengthways between the rubbing boards.

A number of other processes have been suggested for bleaching of linen but the one described above is still chiefly used.

A process patented by C. E. Cross and G. A. Parkes[1] practically consists of steaming the goods in place of the ordinary boiling.

The goods are impregnated in the open width with a solution, at 85° to 105° F., containing 1¾ lbs. soft soap, 14 lbs. silicate of soda (specific gravity 1·4), 1½ lbs. caustic soda, 1¾ lbs. mineral oil of high boiling point, 10 gallons of water.

The goods are batched in a chamber containing steam at atmospheric pressure. The batch is then steamed with dry steam for 1 to 4 hours at a pressure of 4 lbs., and finally boiled under pressure with soda or sodium silicate and washed. The material is now ready for the first *dip*.

Jardin patented the application of nitric acid, E. Tabari the use of nitrous acid in the nascent state, C. A. Martin the addition of oil of turpentine to the soda lye, and De Keukelaere, sodium sulphide for treating the linen fibres. Siemens and Halske and O. Keferstein suggested the application of ozonised air in place of the grassing of linen. Potassium permanganate and hydrogen, or sodium peroxide, may also be used as bleaching agents.

The Bleaching of Hemp.

Hemp is rarely bleached. The methods given for bleaching of linen may be applied to hemp. A special method given in *Das Färben und Bleichen der Textilfasern*, by Dr. J. Herzfeld, consists in steeping hemp threads in a solution of 10 lbs. of sodium silicate (72° Tw.), in 50 gallons of water for ½ hour. The hemp is then boiled in water, rinsed, steeped for 24 hours in a solution of 10 lbs. of bleaching powder in 150 gallons of water, hydroextracted, soured in hydrochloric acid (0·1 per cent. solution), washed, and finally treated in a ½ per cent. to 1 per cent. solution of sodium thiosulphate. For a full bleach the operations should be repeated and if necessary a grassing given between.

The Bleaching of Jute.

Jute cannot be bleached to a perfect white; the half-bleached fibre is of a yellowish, whilst a fully-bleached material is of a light cream colour.

The jute fibre is more readily attacked by alkalies and acids than other vegetable fibres.

[1] *Journ. Soc. Dyers and Colourists*, XVII., p. 38, 1901.

From a bleaching liquor which is too strong, or which contains free hypochlorous acid, the jute fibre absorbs chlorine, *i.e.*, it becomes *chlorinated* and as a result weakened. This is especially the case if the jute has to be steamed afterwards.

Sodium hypochlorite may be used with advantage in place of bleaching powder.

The following methods of bleaching jute yarn, as carried out in the Dundee district, are given in *A Manual of Dyeing*.

The hanks are sorted into bundles of from 6 to 8 cwts., suspended on wooden rods, and immersed in a tank containing water at 80° to 100° F., with the addition of 120 gallons of a bleaching powder solution at 8° Tw.

The yarn should be entirely immersed in the liquor and moved from time to time. After the hanks have been immersed for about 1 hour, the liquor is run off, the hanks are allowed to drain and they are then washed, and soured for ¼ to ½ hour in another tank, with the addition of 1 gallon of sulphuric acid, 144° Tw.

The hanks are finally well washed in water.

The result will be a *half bleach;* for a *full bleach* the material is immersed a second time in bleaching powder solution, using 80 gallons, without previous souring.

Another method consists in making the yarn into bundles of about 10 cwts., which are usually treated in three tanks. The first tank contains bleaching powder, 15 to 20 per cent. (calculated on the weight of material), the second 10 to 15 per cent., and the third 5 to 10 per cent.; the yarn is allowed to remain in each tank ½ to ¾ of an hour at a temperature of 120° F. It is then washed and soured for ½ hour with sulphuric acid at 1° Tw.; finally washed and dried.

A. Busch, *Mittheilungen des k.k. technologischen Gewerbe-Museums, Wien*, 1900, recommends the following method of bleaching jute:—

1. Steeping of the jute in lukewarm water overnight.
2. Washing.
3. Boiling for ½ hour in a solution of soda ash, 5 lbs. per 100 gallons. Wringing, washing.
4. Steeping for 10 hours in a solution of bleaching powder, at ¾° Tw. Wring evenly.
5. Souring, ½ hour to 1 hour, steeping in hydrochloric acid ¾° Tw. Wringing and washing.

6. Steeping for 1 hour in a solution of potassium permanganate ($2\frac{1}{2}$ lbs. per 100 gallons of water). Wringing and washing.

7. Steeping for $\frac{1}{2}$ hour in a solution of sodium bisulphite (8 gallons of bisulphite at 72° Tw., per 100 gallons). Thorough washing.

8. Blueing with Methylene Blue, Methyl Violet, Water Blue, Ultramarine, etc.

In order to obtain a softer feel the jute is finally soaped for ten minutes in a warm solution containing 5 lbs. of soap per 100 gallons of water. The soaping and blueing may be carried out in the same bath.

Cross and Bevan's method of bleaching jute pieces is carried out in the following manner :—

1. The pieces are treated for 2 hours, at 160° F., in a solution containing 5 lbs. of sodium silicate per 100 gallons.

2. They are then treated for 2 to $2\frac{1}{2}$ hours with a solution of sodium hypochlorite containing 0·7 to 1 per cent. of available chlorine.

3. This is followed by a treatment with hydrochloric acid, $\frac{1}{2}$° Tw., to which a small amount of sulphurous acid has been added. After this, the goods are well washed and dried.

Another method, which has been suggested for bleaching jute, consists in treating the material first with caustic soda and then exposing it to the action of chlorine gas. After the chlorination the goods are finally treated with caustic soda lye, and washed.

The Bleaching of Chinagrass (Ramie).

The Chinagrass fibre is more readily attacked by bleaching agents than the cotton fibre, but it is more resistant than the linen fibre.

The material is usually boiled with caustic soda, and bleached with sodium hypochlorite, like cotton.

A process has been patented by MacIvor and Chester (Engl. Pat. No. 10,424), in which the material is boiled with a solution of borax, to which is added soap, mineral oil and oil of turpentine, then treated with potassium permanganate and hydrogen peroxide, and, finally, with a solution of sodium bisulphite.

The Bleaching of Artificial Silk.

Artificial silks, especially those produced from solutions of cellulose in ammoniacal cupric oxide, in the manufacture of which highly bleached cotton has been used, usually do not require any further bleaching.

The material being very weak in the wet state, has to be handled with the greatest care. Whenever possible it is best to steep the silk in the bleaching solution, in order to avoid much handling. In bleaching woven goods care must be taken to prevent any damage being done by the squeezing rollers.

Sodium hypochlorite solution should be used in place of bleaching powder.

PART V

MERCERISING

MERCERISING or "Lustreing" of cotton consists in impregnating the fibres with concentrated caustic soda lye, either with or without the application of tension, and in stretching the material before and during the removal of the soda by means of washing.

John Mercer, according to *Life and Labours of John Mercer*, by Parnell, Longmans, Green & Co., noticed, in 1844, that cotton fibres when immersed in concentrated soda lye became transparent, that they swelled, and that a considerable shrinkage took place. He also found that the soda could be completely removed by washing with water, that the fibres again became more or less opaque, and that they possessed an increased affinity for a number of dyestuffs. Mercer termed cotton which had been treated in this manner "fulled cotton." J. Hübner[1] drew attention to the fact that J. Persoz, in his *Traité de l'Impression*, published in 1846, describes a method of dyeing manganese bronze, practised in France, in which caustic soda lye of 35° Tw. is used, and that this strength was considered necessary in order to produce contraction, or shrinkage of the fabric.

It seems, therefore, that the action of caustic soda lye upon cotton, as far as the shrinkage is concerned, was known before Mercer made his discovery. A patent for the process was applied for and granted to Mercer in 1850. Mercer also applied his process to the "crimping" of cotton fabrics.

Gladstone, in 1850, stated that a definite compound was formed between cellulose and caustic soda, *i.e.*, $(C_6H_{10}O_5)_2\ NaOH$ (soda cellulose), which readily decomposed with water. W. Vieweg[2] and Lindemann came to similar conclusions, whilst J. Hübner and F. Teltscher[3] have shown that the existence of a definite compound is doubtful, and that the amount of soda held by the cellulose,

[1] *Journ. Soc. Dyers and Colourists*, XXVII., p. 126, 1911.
[2] *Ber. d. Deutsch. Chem. Ges.*, **40**, 3876, 1907, and **41**, 3269, 1908.
[3] *Journ. Soc. Chem. Ind.*, XXVIII., pp. 641—644, 1909.

which cannot be removed by extraction with absolute alcohol, is much smaller than that found by Gladstone and the other investigators. They also found that the amount of soda absorbed by cotton from soda lyes of different strengths corresponds with the shrinkage and the colour absorption. O. Miller[1] considers the process one of absorption.

Mercer had already observed, and other investigators have also shown, that mercerised cellulose in the air-dry condition contains more water than ordinary cellulose.

According to S. H. Higgins,[2] the amount of moisture in mercerised cellulose increases with the strength of soda lye used in mercerising. It has been suggested by Cross and Bevan, and by others, that a *hydrated cellulose* is the result of mercerisation. C. G. Schwalbe[3] and H. Ost and F. Westhoff[4] have, however, not been able to confirm that mercerised cellulose actually contains chemically combined water.

As further support of the correctness of this view, it might be pointed out that the excess of water contained in mercerised cellulose cannot only be removed, and as a result the dyeing property changed, by drying,[5] but also by applying heavy pressure to the fabric after mercerisation and whilst in a wet state,[6] by extraction with absolute alcohol[7] and by keeping the mercerised cotton for a long period in a dessicator containing either calcium chloride[8] or phosphorus pentoxide.

In 1889 H. A. Lowe[9] discovered that cotton when mercerised under tension and freed from soda, whilst still in the stretched condition, assumes a silk-like lustre. The invention was, however, not appreciated at the time, and Lowe allowed his patent rights to lapse.

In 1895, Thomas and Prevost discovered a method for producing a permanent lustre on cotton[10] which was found to

[1] *Ber. d. Deutsch. Chem. Ges.*, **41**, 4297, 1909.
[2] *Journ. Soc. Chem. Ind.*, XXVIII., p. 188, 1909.
[3] *Zeitschr. für angew. Chem.* **20**, 2172, 1907.
[4] *Chem. Zeit.* **33**, 197, 1909.
[5] J. F. Copley, *Journ. Soc. Dyers and Colourists*, XXIV., p. 72, 1908.
[6] J. Hübner, Engl. Pat., No. 12,455.
[7] J. Hübner and F. Teltscher, *Jour. Soc. Chem. Ind.*, XXVIII., pp. 641—674, 1909.
[8] O. Miller, *Ber. d. Deutsch. Chem. Ges.*, 1911, **5**, 728.
[9] English Patent, No. 20,314.
[10] German Patent, No. 85,564.

be identical with Lowe's patent. This patent was attacked in various countries and ultimately annulled.

A considerable number of patents were taken out at the time[1] with the intention of protecting mercerising agents, other than caustic soda, and suggesting additions to the mercerising bath, in order to prevent shrinkage of the fibres. The fact that the long-stapled Egyptian and Sea-Island cottons gave a better lustre than the short-stapled varieties, was also made the subject of a patent. Nearly all these patents were, however, allowed to lapse.

Mercer had already noticed that effects similar to those produced by caustic soda could be obtained by employing sulphuric acid, zinc-chloride and phosphoric acid.

E. Knecht[2] found that nitric acid of 83° to 84° Tw. had a similar action, and J. Hübner and W. J. Pope[3] discovered that saturated solutions of iodides, and particularly of potassium, and barium-mercuric iodide also produced shrinkage and increased affinity of the cotton for the substantive colouring matters. The action of barium-mercuric iodide was found to be nearly as powerful as that of concentrated caustic soda lye.

Mercer already states in his patent that caustic soda lye of as low a strength as 20° Tw. exerts a distinct effect on cotton. Hübner and Pope[4] made careful observations as regards the dyeing properties and the shrinkage of cotton treated with caustic soda lyes of different strengths, and they found that treatment with a lye of as low as 1° Tw. already had a considerable effect in increasing the affinity of cotton for colouring matters and in producing a certain degree of shrinkage. Both the affinity of cotton for the direct dyeing dyestuffs and the shrinkage increase fairly uniformly up to about 18° to 20° Tw., but at 20° Tw. they increase with the concentration at a far more rapid rate than before, and the greatest shrinkage effect is obtained when soda lye of about 45° Tw. is used, whilst if the strength of the soda lye is increased above 45° Tw. the shrinkage decreases.

The results find an important practical application, because if

[1] *See* Gardner, *Die Mercerisation der Baumwolle.*
[2] *Journ. Soc. Dyers and Colourists*, XII., p. 89, 1896.
[3] *Journ. Soc. Chem. Ind.*, Vol. XXII., pp. 70—77, 1903.
[4] *Journ. Soc. Chem. Ind.*, Vol. XXIII., pp. 404—411, 1904.

soda of a higher degree of concentration, say 60° to 70° Tw. is used, less shrinkage takes place during the actual impregnation, but, on washing afterwards with water, the yarn or fabric tends to undergo a further and considerable contraction; with the higher concentrations of soda, therefore, the greatest strain is exerted on the arms of the yarn mercerising machine or on the clips of the stenter during the early stages of washing with water. There is thus in this case a certain tendency for the yarn to tear or for the cloth to rip, which would be avoided if a more dilute soda had been employed.

It had been generally assumed that in order to produce lustre on cotton fibres by mercerisation two factors, *i.e.*, shrinking and swelling of the fibres, are necessary. Hübner and Pope[1] were the first to observe that concentrated soda lyes in addition produce untwisting of the naturally twisted ribbon-like fibre. They further observed that the natural twist of the fibre does not always run in the same direction, but that the same fibre is generally twisted in parts to the right and in parts to the left, several changes in the direction of twist being noticeable throughout the length of a single fibre.

This change of twist is of great importance in the production of lustre during mercerisation.

It should further be pointed out that up to a concentration of about 40° Tw. the swelling action of the soda follows the untwisting, whilst at concentrations greater than 40° Tw. the reverse is the case, the untwisting following the swelling. Since the concentration of about 40° Tw. is the lowest at which an effective mercerisation for practical purposes can be effected, it follows that the production of a lustre on cotton is necessarily connected with the action of soda of such concentration as causes the untwisting of the fibre to take place, either after the swelling is at an end, or simultaneously with the occurrence of the swelling. Confirmation of this view was obtained by investigating microscopically the action of hot caustic soda solutions on the fibre, because it is well known that hot soda is not nearly so effective a mercerising agent as is the same concentration of soda in the cold. It was found that at high temperatures the fibres began to untwist rapidly immediately they come into contact with the hot soda, and that after this

[1] *Journ. Soc. Chem. Ind.*, Vol. XXIII., pp. 404—411, 1904.

untwisting is at an end the swelling effect sets in, but not until the whole of the uncoiling is finished.

The lustrous appearance of cotton mercerised under tension has been ascribed to the fibres having been subjected to tension whilst still elastic, and that they present the appearance of "a smooth tube."[1] The true reason of the gloss produced in mercerising may, however, be found in the following explanation. On impregnation with caustic soda lye in a stretched condition, the fibre is seen first to straighten itself and then to swell. After it has become rounded, gelatinous and swollen, the untwisting begins to set in. If the fibre is held at the two ends, one part of the fibre is seen to become twisted, owing to the untwisting of some other part of the stretched fibre; later, another part is seen to twist, perhaps in the reverse direction to the first, owing to some other part of the fibre giving up its natural twist. This kind of action goes on until the original and natural twist of the fibre has become more or less replaced by the second kind of twist produced by the previous unwinding. The fibre mercerised under tension thus presents the appearance of a straight rod on which a series of pieces of corkscrew-like windings are visible; the original creased or folded ribbon which constitutes the raw cotton fibre becomes converted into a straight rod of nearly circular cross-section, which carries on its surface, however, a series of spiral elevations; at the same time the fibre and the surfaces of the raised ridges are perfectly smooth; the rounded surfaces of the smooth ridges reflect the light which falls on them from any direction, and it is to the presence of these ridges, which are absent in the original fibre or in the fibre mercerised loose, that the increased lustre of cotton yarn mercerised in the stretched condition is due. This is clearly seen if a mass of fibres which have been mercerised under tension is examined under a low magnification, in reflected light. The lustre or sheen of the whole mass of fibres is not due to reflection of the light from the whole or a considerable part of the length of the individual fibres, but is due to reflection from a number of points on each fibre, that is, to reflection from the sides of the ridges lying spirally on the surface of the fibre.

In accordance with the results set forth, maximum lustre can, therefore, only be produced if the mercerising agent is able

[1] Lange, *Färberzeitung*, 1898, p. 197.

to produce in a high degree swelling, shrinking and untwisting of the fibres.

It has been found that additions made to the soda lye, such as water-glass[1] or glycerine,[2] retard the swelling and the shrinking of the fibres, and that the lustre obtained is, therefore, inferior to that produced by pure caustic soda lye. Sulphuric acid acts similarly to caustic soda, but cannot be used in practice. Still less lustre is produced by nitric acid, sodium sulphide, and hydrochloric acid, which agents produce strong untwisting but little swelling and shrinking. Practically no lustre is produced by barium-mercuric iodide, which produces strong swelling and shrinking but does not untwist the fibres.

It has also been shown[3] that when, as suggested by Vieweg,[4] salt is added to the caustic soda used in mercerising, the action of the soda is retarded and maximum lustre cannot be obtained.

The dyeing properties of mercerised cellulose have been studied by Justin Müller,[5] W. P. Dreaper, W. Schaposchnikoff, and W. Minajeff,[6] and by R. Haller.[7] The latter attributes the increased affinity of mercerised cotton for dyestuffs partly to the fact that the *cutinised layer* which protects the fibres is removed by the caustic soda lye, and that the pure cellulose thus produced is capable of taking up colouring matters more readily.

In order to obtain uniform results in mercerising, it is of the utmost importance to employ the soda lye at a certain strength and temperature.

Special refrigerating plants have been installed in many works in order to enable the soda to be used at low temperatures. Excellent results are obtained by this method, but uniformity of temperature is of much greater importance than the application of the lye at a very low temperature.

The time required for the caustic soda to penetrate and to completely mercerise the fibres varies considerably with different

[1] Meister, Lucius and Brüning.
[2] Farbenfabriken vorm., F. Bayer & Co.
[3] J. Hübner, *Journ. Soc. Chem. Ind.*, XXVIII., 228, 1909.
[4] *Ber. d. Deutsch. Chem. Ges.*, 1908, 3269.
[5] *Zeitschr. f. Farben und Textilchemie*, **3**, 251, 252, 332, 1904.
[6] *Zeitschr. f. Farben und Textilchemie*, **4**, 81—84, 1905; **15**, 233—237, **16**, 252—254, **19**, 309—314, 1907.
[7] *Zeitschr. f. Farben und Textilchemie*, **8**, 125—128, 1907.

qualities of material; from ½ to 1 minute being in most cases sufficient.

The Practice of Mercerising.

The best results, as regards lustre, are obtained on the long-stapled Egyptian and Sea Island cottons, but satisfactory results can also be obtained on combed American cottons. In order to produce a high lustre it is necessary to employ doubled yarns. The twist in single yarns, even if they have been spun from long-stapled cotton, is not sufficiently strong to prevent shrinkage of the fibres. In mercerising cotton fabrics the best results are obtained on face cloths, such as *sateens*, or *Italian linings*. It has been shown by J. Hübner[1] that the structure of the fabric is considerably changed during mercerisation (Fig. 51). Both the warp and the weft threads become contracted, the fibres are more closely packed, and as a result of this the fabric becomes thinner, the interstices between the threads are larger, the warp threads are much more clearly visible, and the sateen binding is more pronounced.

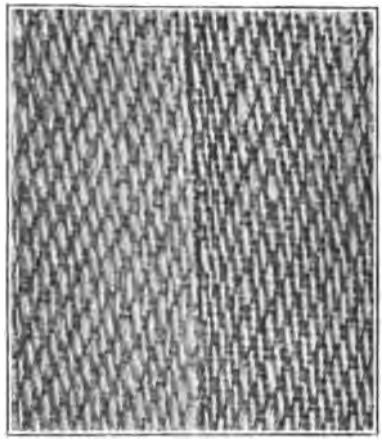

Fig. 51. — Photo-micrograph of Bleached Sateen before and after Mercerisation under tension.

Many attempts have been made to mercerise cotton in the loose state with a view to employing it in spinning single yarns. Of the methods suggested, those of Lowe; Gros and Bourcart; Sir W. Mather, Pope and Hübner, may be mentioned. None of these have, however, found any extensive practical application.

Cops and cheeses cannot be satisfactorily mercerised.

Mercerising of Cotton Yarn in the Hank.

The mercerising of cotton yarn in the hank is, practically speaking, a simple operation. The work is carried out on machines

[1] *Journ. Soc. Dyers and Colourists*, XXVII., p. 128, 1911.

n which the yarn is stretched over rollers and washed whilst in the stretched condition.

Other machines, such as the one suggested by Lowe, in which the yarn is stretched between pairs of rollers, or Ackroyd's machine in which the yarn is mercerised in a doubling frame, by running it from the bobbin through troughs containing the caustic soda lye and stretching between rollers, have found but little application in practice.

J. Kleinewefers Söhne patented a machine in which the hanks are placed round the drum of a centrifugal machine and in which the centrifugal force is utilised in stretching the yarn during mercerising and washing.

F. Davies and Liebmann in 1896 suggested a machine in which the hanks are stretched on a pair of rollers.

H. David constructed a hank mercerising machine with the lower roller perforated. Suction is applied to this roll in order to obtain better penetration of the threads.

In a machine patented by B. Cohnen rollers are employed on which the hanks are alternately stretched and released during mercerisation.

The *Automatic Hank Mercerising Machine* of Messrs. C. G. Haubold jun., G.m.b.H. , is illustrated in Fig. 52.

Each side of the machine works independently of the other; it carries two pairs of horizontal revolving rollers upon which the hanks are placed. Thus, as shown in the illustration, whilst the yarn on the one pair of rollers is held under tension, during impregnation with the soda lye and during washing, the other pair is in such a position as to allow the removal of the mercerised hank and the re-charging of the rollers with fresh yarn. The revolving spools *d* are fixed, whilst tension is put on the yarn by means of the rollers *f*. When one set of rollers has been charged with yarn, tension is put on by the roller *f*, and the weighted squeezing rollers *e* are allowed to exert pressure on the hank. The trough *g*, containing the caustic soda lye, moves into position underneath the rollers and is sufficiently raised in order to immerse the hank. Whilst the yarn is being treated with the lye, the rollers slowly revolve. The squeezing rollers *e* are now again brought into action, to remove the excess of soda from the yarn, the trough *g* is lowered and removed and hot water is spirted against the hank from pipe *h*. The first wash-water,

which contains a considerable amount of caustic soda, is taken away through a special pipe and conveyed to the recovery plant. Cold water is used for the final washing. The yarn is now once more squeezed by means of rollers *e*, and the tension is released by rollers *f*, in order to allow the removal of the mercerised hank. In the meantime the other side of the machine has been charged.

The caustic soda lye circulates continuously through the troughs, and, if necessary, it may be conducted through a trough provided with a coil, through which refrigerated brine circulates. The tension required for different kinds of yarn can be readily

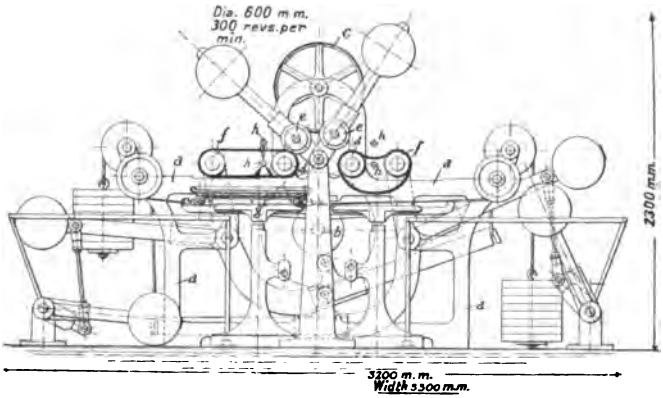

FIG. 52.—Automatic Hank Mercerising Machine.

adjusted by means of weights. 400 to 500 lbs. of yarn may be treated on one machine per day. Power required, 3 h.p.

The *Hank Mercerising Machine* invented by Lord and built by Spencer & Sons should also be mentioned. In this machine the hanks are placed on two sets of horizontal arms, nine at the top and the same number at the bottom, which radiate from a vertical shaft. The upper arms carry triangular brackets provided with rollers, by means of which tension is put on the hanks. The lower arms also carry revolving rollers. After a hank has been placed on the pair of rollers which is in position for being charged, tension is put on automatically by means of triangular brackets on the top rollers, and the vertical shaft with the arms now performs $\frac{1}{9}$th of a revolution. Caustic soda lye is sprayed

on to the yarn, or the bottom rollers may be immersed in a trough containing the lye. The operation of impregnating the yarn is repeated four times. The fifth operation consists in removing excess of soda by squeezing an indiarubber roller against the bottom roller. During the sixth, seventh, and eighth stoppage of the rollers the hanks are washed with hot and with cold water, and when the roller, at the ninth stoppage, returns to the original position, the triangular brackets release the hank, which is now removed and replaced by a fresh hank. The soda lye is circulated by means of a centrifugal pump.

Mercerising of Cotton Warps.

Cotton warps can be conveniently mercerised in a machine resembling the ordinary warp dyeing machine. The warp is impregnated with the soda lye in the first two boxes, and washed and soured in the following boxes.

Warp mercerising may also be carried out in the *warp slasher*.

Mercerising of Cotton Piecegoods.

The stage at which the pieces should be mercerised depends upon the type of material and upon the effect required. The following three methods are chiefly used :—

(1) The goods are singed, wetted out in the mangle, batched up and mercerised. They are then passed into the kier, without previously souring, and boiled with caustic soda lye of 1° Tw. The other operations are carried out as described under "Bleaching."

(2) The cloth is washed once after the "first boil," scutched, passed through the water mangle and batched upon rollers. It is now taken to the mercerising machine, then washed, soured, washed and passed into the kier for the "second boil."

(3) The cloth is thoroughly washed after chemicking, scutched and mangled and afterwards mercerised. It is now soured, washed and finished in the usual manner.

The machines employed in mercerising cotton fabrics may be conveniently divided into two classes: (1) Machines in which

shrinkage of the fabric is prevented as far as possible, but in which the fabric cannot be stretched to the grey width; and (2) machines in which the fabric can be stretched to any width desired.

Of the great number of machines which have been suggested for the mercerising of cotton fabrics, those in which the fabric is impregnated with the soda lye in a mangle and afterwards stretched and washed on a stenter, are now chiefly used.

Of the first type, the following machines may be mentioned. Bernhardt suggested winding the cloth on a perforated roller and forcing the caustic soda lye through it by means of powerful pumps.

In the machine invented by Schwabe, Boral and Kymer, the cloth is impregnated in a mangle from which it passes round a number of rubber-covered cylinders of large diameter, which are pressed against driven cylinders of smaller diameter. The cloth which adheres to the surface of the cylinders is thus prevented from shrinking. The washing is carried out whilst the cloth is in contact with the surface of the cylinders.

Jeanmaire suggested a machine of similar construction in which the cylinders have a roughened surface.

In the machine patented by Ecob, the transverse shrinkage of the cloth during impregnation with the soda and during washing is reduced to a minimum by passing the cloth between a number of heavy rollers, each of which drives the succeeding one.

Hasslacher suggested the use of corrugated rollers in order to prevent shrinkage during mercerising.

In the Simon mercerising machine the cloth is impregnated in a mangle, squeezed, and then stretched upon two large drums, the axles of which are not parallel. The piece is pressed against the edge of the two drums by means of endless chains, padded with rubber. The time during which the pieces are in contact with the drums is, however, short, and it is, therefore, impossible to entirely prevent shrinkage.

As already stated, the second type of machine, consisting of a mangle and a clip stenter, is now chiefly employed in mercerising piecegoods.

Although there are works in which the cloth, after impregnation with caustic soda lye is batched and allowed to lie for some time before it is passed on to the stenter, the more

common practice consists in passing the cloth, after impregnation, immediately on to the stenter. The results obtained by the two methods are practically the same.

Figs. 53 (elevation) and 53A (plan) illustrate a *Mercerising Range* of Messrs. Mather & Platt, Ltd., which is suitable for mercerising all classes of fabrics, and in which the cloth may be treated at a speed varying from 30 to 60 yards per minute. In order to obtain thorough impregnation of the cloth with the caustic soda lye, the machine is provided with two padding mangles. The squeezing bowls of the mangles are made of cast-iron and indiarubber covered, and pressure is applied to them by means of screws and levers, Hydraulic pressure may be used with advantage. The cloth passes first into mangle A, which has a trough B below, containing the caustic soda lye. The trough has a cavity through which cold water or refrigerated brine may be circulated, or which may be supplied with ice in order to keep the mercerising lye at a low and uniform temperature. By means of iron guide rollers, which are placed below the surface of the lye, the cloth is passed through the lye, then squeezed, impregnated once more, and squeezed a second time. In order to prevent the cloth from contracting at this stage or curling at the selvedges, it is now passed over a number of sheet-iron drums, which are closely placed together, and which are turned by the cloth. During the passage over these drums time is given for the caustic soda to thoroughly penetrate the cloth.

From here the cloth is conducted to the second mangle D, which is similar in construction to the first, and in which the cloth is again twice impregnated and twice squeezed, thus assuring complete impregnation, even when the machine is worked at the highest speed.

The impregnation is now followed by the stretching and washing on the stenter E. Two endless chains of automatic clips, narrow at the entering end of the stenter, seize the cloth by the selvedges and stretch it gradually to the grey width, after which the chains run parallel to the delivery end. Perforated spirt pipes, F, G, H, supplied with the hot water by steam-driven pumps, are provided above and below the cloth; by means of these hot water is showered on the cloth from both sides. In order to obtain a wash liquor containing a fairly high

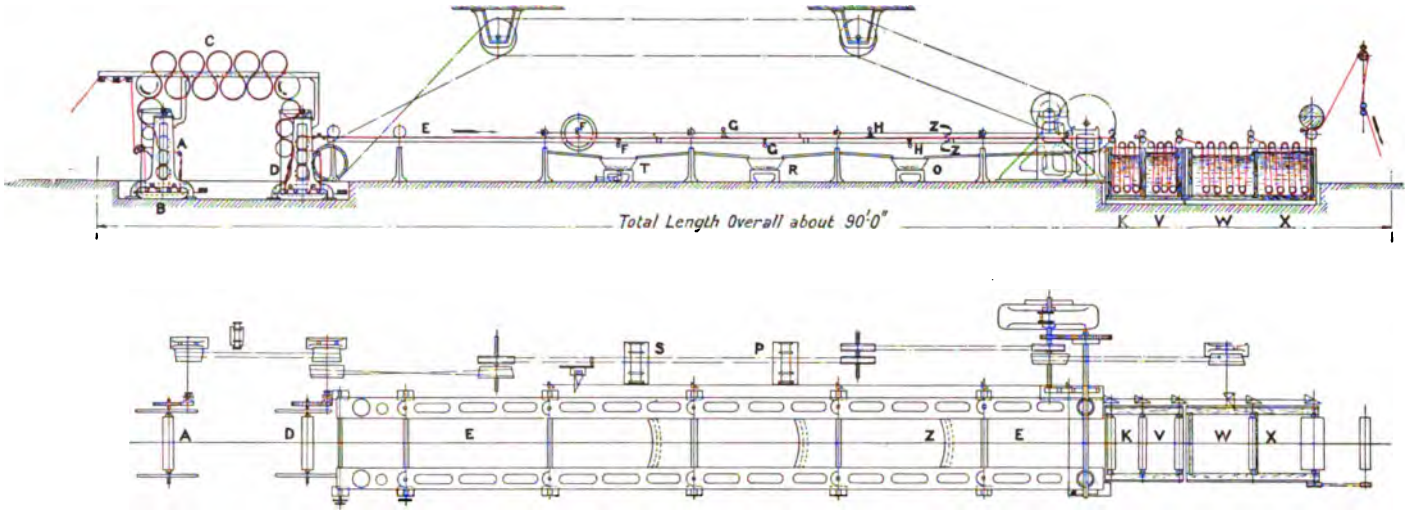

FIGS. 53, 53A.—Elevation and Plan of Mercerising Range.

UNIV. OF
CALIFORNIA

percentage of caustic soda, which may be either used directly in the boiling kiers, or which may be evaporated in multiple-effect evaporators, the washing is conducted on the counter-current principle. The hot water which is showered on the cloth before it leaves the washing cistern K, is pumped to the last set of spirt pipes H; it then runs into the trough O, from which it is forced by the pump P into the second set of spirt pipes G. The wash liquor now runs into trough R, from whence it is forced by pump S to the first set of pipes F. The concentrated liquor is finally collected in trough T, from which it passes to the bleach house or the soda recovery plant. Scrapers Z, made of curved steel blades, are fixed both above and below the cloth, and assist in removing the water charged with soda more effectively.

The cloth, after leaving the stenter clips, passes next into the washing cistern K, then through heavy indiarubber-covered squeezing bowls into the cistern V, containing a weak acid solution in order to neutralise any caustic soda remaining in the cloth. In the two cisterns W and X, the cloth is finally washed free from acid.

Power required to drive the range, 18 to 20 h.p.

Mercerising stenters have been built in which the cloth is first only partly stretched. The clips then run parallel for a short distance, water is showered on the cloth, after which the stenter chains gradually widen again until the cloth is stretched to the full width. They now run parallel to the delivery end, where the washing is completed.

A mercerising machine, in which the caustic soda is showered on the cloth, and which is provided with suction boxes underneath the cloth, was suggested by David.

In mercerising machines in which the washing of the fabric is conducted on the counter-current principle, fairly concentrated lyes are obtained, which may be used in the boiling kiers. It is, however, now the practice in many works to evaporate the weak lye in multiple-effect evaporators, and to causticise afterwards with lime.

In order to free the fabric, as far as possible, from soda with a minimum quantity of water, Krais patented a process in which the soda is removed by blowing powerful jets of steam against the cloth.

Finishing of Mercerised Cotton.

The silk-like "scroop" may be produced on mercerised cotton yarn, dyed with the substantive dyestuffs, by treating the yarn, after dyeing, with acetic or tartaric acid. See "Tartaric Acid."

The following method for treating (scrooping) dyed yarn which has not been boiled and bleached previous to dyeing, is recommended by L. Cassella & Co. :—

The yarn, after dyeing and hydroextracting, is treated for 20 minutes in a bath at 86° to 104° F., containing

$1\frac{1}{2}$ per cent. starch
$1\frac{1}{2}$ per cent. cocoa-butter } calculated on the weight of yarn.
$\frac{1}{2}$ per cent. tannic acid

The starch is stirred up with water in the usual manner, boiled up with the cocoa-butter and added through a sieve to the bath; the tannic acid is dissolved separately and then added. The yarn is turned a few times, hydroextracted, and soaped in a lukewarm bath containing

7 to 8 per cent. Marseilles soap } calculated on the weight of yarn.
1 per cent. starch

It is now again hydroextracted and treated for 10 minutes in a cold bath containing, per 100 gallons, 3 lbs. tartaric acid and 10 lbs. sodium acetate. The yarn is finally hydroextracted and dried without rinsing.

Reactions for the Characterisation of Mercerised Cotton.

Although fibres which have been thoroughly mercerised exhibit very distinct microscopic characteristics, it is found to be exceedingly difficult in many instances to say with certainty whether fibres have been mercerised, if such fibres are taken from fabrics which have been mercerised on an industrial scale. In many instances the individual fibres have been incompletely penetrated by the caustic soda solution, and frequently some of the fibres have not been mercerised at all. The strength of the caustic soda lye used has also a very considerable influence upon the microscopic appearance of the fibres.

A number of reactions have been suggested, of which the following may be mentioned:—

Julius Hübner[1] suggests the following methods: I. The pattern, after having been freed from starch, is immersed for a few seconds in the following solution, along with a non-mercerised sample: 20 grms. iodine dissolved in 100 c.c. of a *saturated* solution of potassium iodide in water. The samples are now removed from the solution. After washing them a few times with water it will be seen that the non-mercerised cotton becomes white, whilst the mercerised sample remains a blueish-black colour, which only fades very slowly on prolonged washing.

If the patterns, after immersion, are washed in an aqueous solution containing 2 per cent. of potassium iodide, in place of water, the iodine is removed from both samples more slowly. After prolonged washing with this solution, the non-mercerised pattern becomes ultimately white with a brownish tint, whilst the mercerised cotton remains a brownish-black, which, on adding water, changes into a blueish-black, whilst the ordinary cotton becomes quite white. The black-brown colouration is seen to wash out the more slowly the stronger the caustic soda lye with which the cotton has been mercerised.

If coloured samples are to be examined either by this or by the following method, it is necessary either to discharge the colour by means of any of the well-known agents, or, in the case of light coloured patterns, to dye the standard pattern to approximately the same shade with dyestuffs similar to those which have been used in producing the pattern under examination.

II. Two solutions are prepared, one containing 1 grm. of iodine and 20 grms. of potassium iodide in 100 c.c. of water, and another containing in 300 c.c., 280 grms. of zinc chloride. Shortly before using the reagent, 10 to 15 drops of the first solution are added to 100 c.c. of the zinc chloride solution. The patterns should be wetted out, pressed between filter paper and then placed into the reagent. Mercerised cotton soon assumes a dark-blue colouration, whilst non-mercerised cotton remains white. Cotton which has been treated with soda lye weaker than that usually employed in industrial mercerisation, shows a weaker colouration which is approximately proportionate in depth to the strength of caustic

[1] *Journ. Soc. Chem. Ind.*, XXVII., p. 105, 1908.

soda used. By immersing samples of cotton which have been mercerised with known strengths of caustic soda together with the sample under examination, it is possible to ascertain the degree of mercerisation.

A. B. Knaggs [1] suggests dyeing the patterns with a weak solution of Benzopurpurine 4 B. If a quantity of hydrochloric acid is added to the dyebath, sufficient to change the red colour of the non-mercerised pattern into a blue-black, the mercerised pattern will remain red.

[1] *Journ. Soc. Dyers and Colourists*, XXIV., p. 112, 1908.

PART VI

MINERAL COLOURS

THE mineral colours are still extensively used. Their fastness is remarkable, the cost of production is low and they impart to the cotton weight, which cannot be obtained by dyeing with the coal tar dyestuffs. The principal mineral colours still employed are:—*Chrome yellow, chrome orange, chrome green, iron-buff, khaki, Prussian blue, manganese bronze.*

Chrome Yellow or Chromate of Lead.

The following method of dyeing chrome yellow gives satisfactory results: A solution of basic lead acetate is prepared by boiling for 4 to 5 hours 60 lbs. litharge, 120 lbs. brown sugar of lead and 35 gallons water.

The yarn is worked in the basic lead acetate solution, which, according to the depth of shade required, should have a specific gravity of 3° to 8° Tw., for about ½ hour. It is now well wrung, shaken, and passed through a bath containing 1 to 3 lbs. of potassium bichromate in 10 gallons of water, with or without the addition of ½ to 1 lb. of sulphuric acid. The yarn is finally thoroughly washed and dried.

If the colour has not been completely fixed upon the fibres, cotton yarn dyed with chrome yellow is liable to "dust" when shaken. In order to prevent this, the yarn should be treated with a weak emulsion of oil before drying.

A better yellow is produced by working according to the following method: The hanks are turned a few times in the solution of basic lead acetate, taken out and placed into a dye-beck. The lead acetate solution is now poured over and the hanks are allowed to remain in the solution overnight. They are taken out in the morning, well wrung and turned ten times in a cold bath containing 3½ lbs. quicklime which has been carefully slaked with boiling water.

After this the hanks are wrung and turned four times in a

bath containing 5 lbs. bichrome, 6 ozs. alum, and 1 lb. sulphuric acid. The yarn is finally thoroughly rinsed, oiled and dried.

The following methods of dyeing chrome yellow are given in *A Manual of Dyeing*, by Knecht, Rawson and Loewenthal.

I. *Stock Liquor.*—Dissolve boiling, 100 lbs. brown sugar of lead and 50 lbs. of litharge in 36 gallons of water.

Dyeing.—Pass the yarn through lime-water, 1½° Tw., and wring; then work in a solution of basic lead acetate, prepared by diluting the stock liquor with cold water to 10° Tw., wring out and pass through another tub with lime-water 1½° Tw. The lead liquor is used continuously and maintained at the same strength by the addition of fresh stock liquor. The chrome-bath is prepared with about 6 lbs. of bichromate of soda per 100 gallons, and is from time to time freshened up with fresh bichromate solution. The yarn is passed through the chrome-bath and then turned a few times in water (containing 1 part of hydrochloric acid per 300 parts of water), finally washed in water and dried.

II. *Lemon Yellow.*—Prepare a stock liquor by dissolving 100 lbs. of brown sugar of lead in 80 gallons of water, to stand at about 16° Tw. Fill a vat holding 40 gallons with water and add 3 pints of stock liquor and 1 gallon of caustic soda lye, 71° Tw., turn the yarn about three times in the bath wring and pass through the chrome-bath, wring, wash and dry. The chrome-bath is prepared for a vat of 40 gallons, with 3 lbs. bichromate of soda and 6 ozs. of sulphate of zinc.

Chrome-yellow shades can be readily matched with some of the coal tar dyestuffs, but on account of the weight which it gives to the yarn the mineral colour is still very extensively employed. Chrome yellow is fast to light, acids and soap. The shade is, however, turned brownish by sulphuretted hydrogen, and orange by alkalies.

Chrome Orange.

Chrome orange is obtained by treating chrome yellow rapidly in an alkaline bath. For this purpose a boiling bath of clear lime-water is prepared. In this the yarn dyed with chrome yellow is turned very rapidly five to six times until the orange shade is fully developed. It must then be quickly removed (or the colour will be stripped) and rinsed twice.

The yarn is finally treated in a bath containing soap, a small quantity of soda ash and cotton-seed oil, wrung or hydro-extracted, without rinsing, and dried. Chrome orange is fast to light, soap and alkalies, but is turned yellow by acids.

Chrome Green.

The chrome green produced by precipitating chromium hydroxide on the fibres yields a very light shade of green only and is not used in practice.

The chrome green dyed at present consists of a combination of indigo blue and chrome yellow. The material is first dyed a light blue in the indigo vat and then topped with chrome yellow by one of the methods described above.

Iron-Buff.

Iron-buff is a colour which has been used in very early times. The author found among the mummy bandages of two mummies belonging to the XIIth dynasty (about 2,500 B.C.), two bandages which had been dyed with this colour. The considerable amount of lime present in these bandages may lead to the suggestion that the iron salt had been precipitated by means of lime.[1]

Iron-buff is still very extensively used in cotton dyeing. It consists of hydrated ferric oxide, which may be produced on the fibre by one of the following methods:—

(1) The material is evenly impregnated with a ferrous salt, well squeezed or wrung, and then passed through a weak solution of caustic soda, soda ash, or lime-water. A passage through a weak solution of bleaching powder is finally given to completely oxidise the ferrous hydrate. The goods are then rinsed and dried.

(2) Much brighter and better shades are obtained if ferric nitrate is used in place of the ferrous sulphate. The material is impregnated with a solution of ferric nitrate of 2 to 6° Tw., thoroughly squeezed and immediately passed through a solution of soda, 1 to 3° Tw. No further oxidation is required.

(3) Another method of producing iron-buff which is very largely used consists in impregnating the pieces after scouring, souring, and washing with a solution of ferric nitrate which has been prepared by dissolving iron-turnings in nitric acid. For this purpose the water mangle may be conveniently employed.

[1] *Journ. Soc. Dyers and Colourists*, XXV., p. 223, 1909.

The pieces are given two or three passages and are afterwards rinsed. The passage through an alkaline bath is not required.

The depth of shade varies according to the amount of ferric hydroxide precipitated on the fibre, from a light yellow, the so-called *Nankin yellow*, to a light brown. In order to obtain heavy shades, the dyeing process is repeated.

Iron-buff is fast to light, soap, and alkalies, but is stripped by acids.

Khaki.

Khaki is a shade of drab which is very largely dyed on heavy cotton piecegoods, such as "twills," etc., used in the army. It is one of the fastest colours known. Similar shades may be produced by dyeing with the sulphur dyestuffs, by using substantive cotton dyestuffs which are after-treated with copper and chromium salts, by dyeing Alizarine dyestuffs on chromium mordants, and by the combination of some of the new vat colours. These have, however, not been able to replace the real khaki.

One of the chief objections to real khaki is that it makes the goods very hard and that cloth dyed with it is difficult to sew through. The real khaki consists of a mixture of chromic and ferric hydrates fixed on the fibre.

Khaki was first introduced by Gatti of Accrington. The following recipe for dyeing khaki is given in *A Manual of Dyeing*:—

The scoured cloth is passed through a mixture of ferrous and chromic acetates, the latter being obtained by the reduction of bichromate with glucose and sulphuric acid in the presence of acetic acid. Two passages are given through the padding machine; the liquor should stand at 36° Tw. The cloth is now dried on wrapped tins and afterwards steamed in a rapid ager in which the steam and air are maintained at a temperature of 220° F. The goods are then passed through a boiling solution of caustic soda and sodium carbonate, standing at 12° Tw. The proportion of caustic soda to sodium carbonate in the fixing liquor is 1 : 3.

When dyeing khaki the greatest care must be taken to prevent the cloth from creasing or folding during boiling, souring and dyeing, or uneven and streaky shades will often result.

The scouring and the souring should be conducted in the open width. Boiling in a kier of the "Jackson-Hunt" type is best suited for this purpose.

Prussian Blue.

Prussian blue is still largely dyed on wool, whilst in cotton dyeing it has been nearly altogether replaced by the basic cotton dyestuffs.

One of the simplest methods of dyeing Prussian blue consists in dyeing the material first with iron-buff. The colour is developed by a passage through a cold solution of potassium ferrocyanide (2 parts) which has been acidified with sulphuric acid, 168° Tw. (1 part). The depth of the blue depends upon the amount of ferric oxide fixed upon the fibre.

Purple shades of blue are obtained by padding the cloth with a solution of nitrate of iron (5° to 6° Tw.) with the addition of 2 to 3 per cent. of stannous chloride. The temperature of the padding liquor should be 68° to 85° C. The pieces are then passed through a cold solution of potassium ferrocyanide, 4 parts, sulphuric acid (168° Tw.), 2 to 3 parts, and finally washed and dried.

Prussian blue may be topped with logwood extract or with Methyl Violet, etc.

Prussian blue is fast to light and acids, but it is readily decomposed by alkaline and by boiling soap solutions. It fades if exposed to sunlight for a long period, but the colour is restored if the goods are kept for some time in the dark.

Manganese Bronze or Bistre.

Manganese bronze is produced by impregnating the cotton with a solution of manganous chloride (the so-called "bronze liquor," a bye-product in the manufacture of bleaching powder being generally used) and by fixing in a hot solution of caustic soda, about 4° Tw. The caustic soda must be free from sodium carbonate, or uneven shades will result. In order to complete the oxidation, the goods are finally passed through a weak solution of bleaching powder, or the bleaching powder may be added to the caustic soda solution.

Fairly heavy shades may be obtained by using the following method: The pieces are slop-padded with bronze liquor at 15° Tw., and dried in hot air. They are then passed through caustic soda lye at 16° Tw., allowed to lie for about 3 hours,

afterwards thoroughly washed and passed through a solution containing ½ lb. of bichrome in 100 gallons of water, at 120° F. The goods are finally treated in a solution of bleaching powder, 1° Tw., washed and dried.

Considerable difficulty is frequently experienced in dyeing manganese bronze evenly. The following methods of dyeing manganese bronze have been proposed with a view to overcome this difficulty.

According to Endler the cloth is impregnated with manganous chloride, dried and passed through a solution of potassium bichromate neutralised with ammonia. The colour is finally oxidised by a passage through a weak bleaching powder solution.

According to Depierre,[1] the cloth is padded with manganous chloride solution (4 lbs. per gallon of water), dried in the hot-flue, passed through a solution containing permanganate of potash and soda ash (1 lb. and 10 ozs., respectively, per gallon of water) at 115° C.

According to E. Knecht,[2] tannic acid is employed as the fixing agent. The cotton impregnated with tannic acid is passed through a solution of potassium permanganate. The tannic acid is finally destroyed by means of sodium peroxide.

The process is also recommended for dyeing iron-buff and Prussian blue.

It is of interest to note the method of dyeing manganese bronze given by J. Persoz, in his *Traité de l'Impression des Tissus*, 1846.

After impregnating the cloth in a mangle with the manganous chloride (25° Tw.) to which a small quantity of gum-water is added, it is dried and then passed through a hot solution of caustic soda, 22° to 36° Tw.

By using this method very heavy and even shades may be obtained by a single impregnation. It was found that a treatment with caustic soda lye of about 22° Tw., followed by batching of the pieces and allowing them to lie for about 3 hours in the batch, before the final treatment with bleaching powder solution, gave the best results.[3]

[1] *Journ. Soc. Dyers and Colourists*, VII., 26, 1891.
[2] *Journ. Soc. Dyers and Colourists*, XXVI., 266, 1910.
[3] J. Hübner, *Journ. Soc. Dyers and Colourists*, XXVII., 126, 1911.

PART VII

THE NATURAL COLOURING MATTERS

THE natural colouring matters, although still of considerable importance to the cotton dyer, are being more and more replaced by the artificial dyestuffs.

Indigo and logwood are the chief representatives employed at present in cotton dyeing. The former, however, has found a very serious competitor in the artificial indigo (synthetic indigo), whilst the latter is now, in many cases, replaced by the direct dyeing cotton dyestuffs and particularly by the sulphur dyestuffs.

Indigo.[1]

Indigo is obtained from the leaves of the various species of *Indigofera*, chiefly from *Indigofera tinctoria*. The principal supply of indigo is derived from India (Bengal, Madras, Oude), but considerable quantities are also manufactured in Java, China, Japan, Brazil, etc. The leaves of the indigo plant contain a glucoside, named by Schunck "Indican," which splits up into indigo and sugar.

Small quantities of indigo are also contained in other plants, such as the *Isatis tinctoria*, from which the *Woad* is obtained. Woad is still cultivated near Wisbeach, in Lincolnshire, and on the Continent.

Woad is not used alone but together with indigo in the *woad vat*.

The colouring matter contained in indigo is the *indigo blue* or *indigotine*. The different brands of indigo contain, however, besides indigotine varying amounts of other substances. The mineral impurities consist of silicates, lime and sand.

The organic impurities contained in natural indigo, first studied by Berzelius, are: *Indigo gluten*, 1 to 2 per cent.; *indigo brown*, 1 to 3 per cent.; *indigo red*, 1 to 4 per cent., in

[1] For fuller particulars regarding the application of indigo, see *Indigo Pure, B. A. S. F.*, published by the Badische Anilin & Soda Fabrik.

the East Indian and Guatemala indigo, and sometimes as much as 15 per cent. in the Java brands.

It is frequently stated that these substances exert certain influences in dyeing with indigo as regards the shade and the fastness of the dyeings. No satisfactory proofs have, however, so far been brought forward as to the correctness of such statements. On the other hand, we have the researches of Schwarzenberg and Schwartz,[1] and of J. E. Tulleken,[2] which conclusively prove that these substances have neither a beneficial nor disadvantageous action; they behave as indifferent substances. In the *warm vat*, which is chiefly used in wool dyeing, a small portion of the indigo red is converted into blue and into other yellowish-brown bodies. This conversion, however, takes place to a much smaller extent in the *cold vats* used in cotton dyeing. The redness of deep indigo dyeings cannot be ascribed to the indigo red but is due to the form in which the indigo blue is deposited on the fibre.

As far as the *zinc-dust vat* is concerned, Binz and Rung[3] state that the loss of indigo in the vat is possibly due to these impurities.

Indigo blue, the dyestuff contained in indigo, is insoluble in water, but it is converted by reducing agents in the presence of alkalies into a soluble substance, the *Indigo White*. Both the animal and the vegetable fibres exhibit a certain affinity for indigo white; it penetrates into the fibres. By subsequent exposure to air the indigo white is oxidised to indigo blue, which is thus fixed in a more or less finely divided state. The fastness of the dyeings, therefore, to a very considerable extent depends upon the state of division of the particles upon and in the fibre.

The dye-liquor which contains the indigo white dissolved in the alkali is called the *indigo vat*.

The principal indigo vats may be divided into two groups :—

(1) *The Cold Vats.*
  (*a*) The Vitriol or Copperas vat,
  (*b*) The Zinc-lime vat,
  (*c*) The Hydrosulphite vat.

(2) *The Warm Vats, or Fermentation Vats.*

[1] *Bulletin de la Societé Industrielle de Mulhouse*, X., 1837.
[2] *Bulletin des Kolonial-Museums zu Harlem*, No. 20, April, 1899.
[3] *Zeitschrift für angewandte Chemie*, XXII., 520, 1899.

The cold vats are chiefly employed in cotton dyeing. A certain amount of indigo is invariably lost in the vat due to the formation of products, other than indigo white, and the greatest care has, therefore, to be exercised to conduct the vats so as to reduce this loss to a minimum.

The Badische Anilin & Soda Fabrik give the loss of indigo in the different vats as follows:—

Vitriol vat, 25 per cent.; zinc-lime vat, 10 per cent.; pure hydrosulphite vat, 2 per cent.; bisulphite, zinc-dust, caustic soda vat (especially if the stock vat is left standing for some time), 20 to 30 per cent., calculated on the amount of indigo fixed on the fibre.

Indigo, if properly applied, is counted among the fastest colours. In heavy and medium shades it is very fast to light. Light shades, however, fade after a, comparatively speaking, short time of exposure.

Indigo dyeings always "rub"; but their fastness to rubbing depends very much upon the manner of dyeing. Shades which have been built up gradually by giving several "dips" are much faster to rubbing than shades which have been dyed in stronger vats.

Very weak solutions of bleaching agents (chloride of lime, etc.), if carefully applied, have little action on indigo-dyed cotton, whilst stronger solutions attack the colouring matter readily. One of the chief properties of indigo-dyed cotton is that it retains its beautiful greenish-blue tone after washing. The shade certainly becomes gradually lighter and lighter by repeated washing, but, if anything, it also becomes more and more beautiful. Even the best of the indigo imitations become duller, some redder and duller, on washing.

Cotton which has been dyed in vats prepared with the addition of lime has always to be soured and finally thoroughly washed in water; washing in water is, however, sufficient after dyeing in the hydrosulphite vat.

If the cotton is badly wrung or squeezed after dyeing in the vat, or if too few dips have been given, *i.e.*, if very strong vats have been used, a considerable amount of indigo (from 3 to 35 per cent.), will be lost in the subsequent operations of souring and washing. It is, therefore, necessary to provide special tanks in which the liquors are collected and the indigo allowed to settle out.

The Badische Anilin & Soda Fabrik have discovered that very

beautiful bright reddish shades are produced on cotton piece-goods which have been prepared with bone glue, previous to dyeing in the vat. For this purpose the pieces are treated with a solution containing 2 to 5 parts of glue per 1,000 parts water, squeezed and dyed, or still better results are obtained if the goods are dried after the impregnation with this solution.

20 to 30 per cent. of glue (calculated on the weight of dry indigo taken) may be added to the dye vat, but care must be taken not to have an excess of glue present.

The indigo vats are chiefly employed in hank, warp and piece dyeing. Loose cotton, cops and cheeses are less frequently dyed by this method, because it is much more difficult to obtain satisfactory results on these materials. Special apparatus are required in which the dye liquor is kept out of contact with the air, as far as possible.

Loose cotton may be dyed in the "Obermaier" apparatus, p. 343. The material should be well hydroextracted, after dyeing, and exposed to the air.

Cops and *Cheeses* can be dyed either in machines belonging to "the packing system," or in the "perforated skewer" type of machines, which are described under "Cop Dyeing."

The hydrosulphite-soda vat is best suited for this purpose.

Yarn Dyeing.

Cotton yarn is usually dyed either in the *copperas* or in the *zinc-lime vat*. The vats are round or rectangular vessels made of wood or iron, or built in cement. They are usually let into the ground to such a depth as to allow the workmen to handle the hanks conveniently. Wringing pegs are provided immediately above the vats. The vats usually hold from 150 to 225 gallons of liquor. They are arranged in such a manner that the grey yarn may be given the first *dip* in the weakest vat. From here it is then taken to the stronger vats. It is the usual practice not to strengthen the vat, but to exhaust each vat as far as possible.

The evenness of the shade depends very much upon the number of dips given, as also upon the thoroughness and carefulness exercised in the wringing out of the yarn.

The vats should be nearly filled to the top in order to allow the yarn to be immersed in the liquor as far as possible.

Further particulars will be given under the different vats.

Warp Dyeing.

The *Indigo Warp Dyeing Machine* illustrated in Fig. 54 has been designed by W. H. Pennington, and is built by J. Jackson, of Todmorden. It consists of the cast-iron vats, which are partly below the floor, provided with suitable squeezing rollers, and with a cage which carries the immersion guide rollers, which can be readily lifted out of the vat. After passing the warp through one of the vats the cage is lifted out and the whole mechanism travels along on the top of the vats to another vat, into which the cage is lowered, and in which the warp

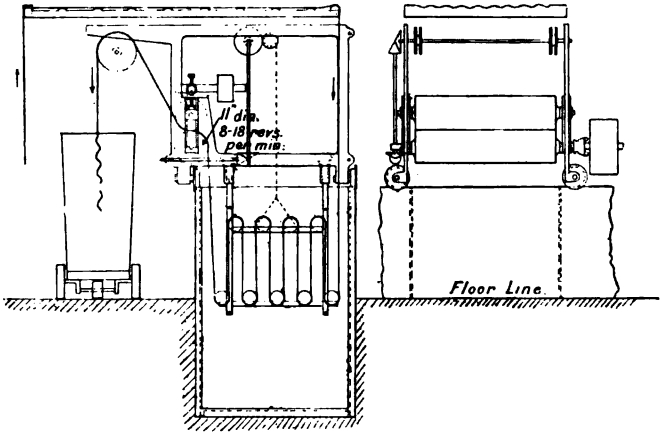

Fig. 54.—Indigo Warp Dyeing Machine.

receives the second dip. A range of 6 vats requires a space of about 28 feet by 12 feet. The squeezing rollers are about 11 inches in diameter, and 6 warps, at a speed of from 8 to 18 yards per minute, are usually run through the machine at a time.

The Dyeing of Cotton Piecegoods in the Indigo Vat.

Cotton piecegoods are either stretched on frames called *dipping frames*, by means of which they may be immersed into a vat, called the *dipping vat*, Figs. 55 and 55A (Mather & Platt), or they are treated in continuous dyeing machines.

In the former kind of vat, which is chiefly used for dyeing heavy goods, the cloth remains in contact with the liquor for a longer time; the fibres are, therefore, better penetrated. When

the cloth has been fixed spirally on the hooks, the frame is lowered into the vat. After a few minutes' immersion, it is lifted out and the indigo is allowed to oxidise. The frame is turned after every dip, in order to obtain even shades.

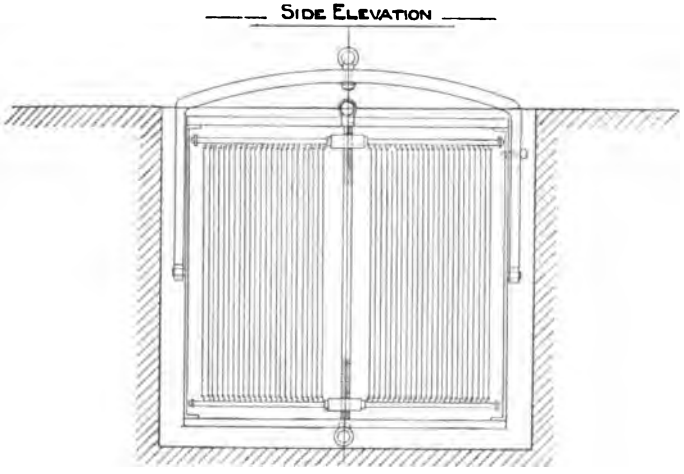

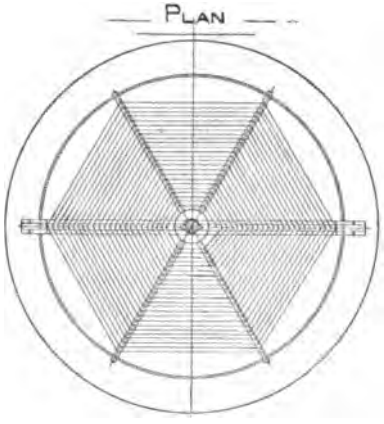

FIGS. 55, 55A.—Dipping Frame and Dipping Vat.

Continuous Indigo Piece Dyeing Machines.—The hydrosulphite and the zinc-lime vats are principally employed in continuous indigo piece dyeing machines. Such machines are much more productive than the dipping vat, and they are specially suited for the dyeing of light goods.

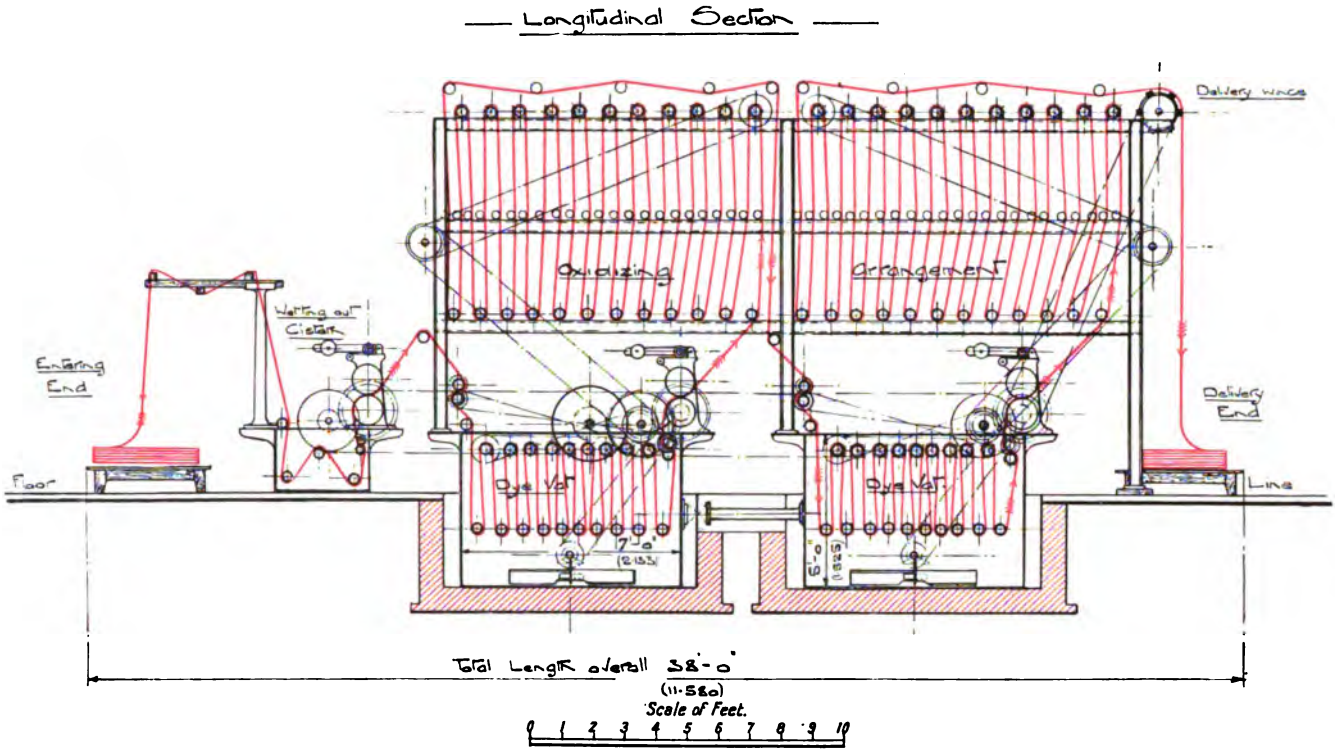

FIG. 56.—Indigo Dyeing Range with Overhead Oxidising.

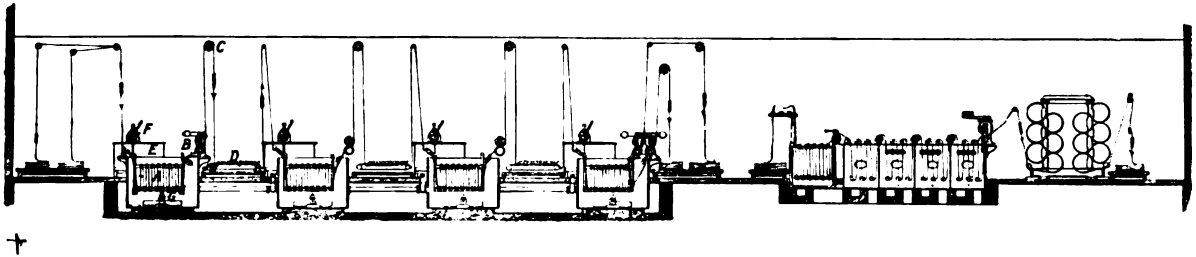

FIG. 57.—Indigo Dyeing Range with Creeper Oxidising.

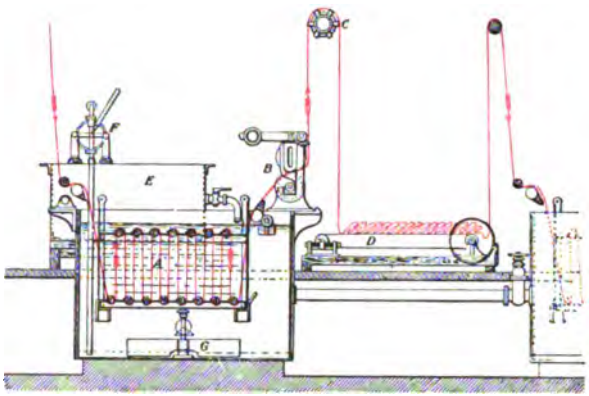

FIG. 57A.—Enlarged View of one Dyeing Cistern and Accessories.

Fig. 56 illustrates an *Indigo Dyeing Range with Overhead Oxidising* (Messrs. Mather & Platt). The cloth enters through a wetting-out arrangement, 3 feet long by 2 feet deep, is squeezed, and then passed into the first vat, which consists of a cast-iron cistern, 7 feet long by 5 feet deep. After having passed over a number of guide rollers, the material is conducted through a scroll arrangement, in order to keep it free from creases, and then through the squeezing rollers. These are usually 12 inches in diameter, the bottom one being made of iron, the top one covered with indiarubber. In connection with each cistern are a number of overhead rollers, over which the cloth passes after it has been squeezed in order to allow complete oxidation to take place. The cloth now enters into the second vat, which is similar in construction to the one described. A mechanical stirrer is provided in each vat, below the guide rollers. Power required to drive the range : about 7 h.p.

Indigo Dyeing Range with Creeper Oxidising (Figs. 57 and 57A) (Messrs. Mather & Platt).—For dyeing dark shades the plant comprises a range of four vats, each 5 feet deep by 7 feet long, and settling tanks. The cloth passes through the vats in a continuous manner. It is conducted round the guide rollers of the cages A, then squeezed by the rollers B. It is then laid by the wince C in loose folds upon the slowly-travelling endless apron D, where it is exposed to the atmosphere for a sufficient length of time in order to completely oxidise the indigo taken up from the former vat, before it enters the next vat. One of the chief advantages of this method of oxidising is that it avoids any undue tension on the cloth, as a result of which curled selvedges or creases are produced, which frequently result in streaky dyeing. A settling cistern E is in connection with each vat, and this is provided with a small hand-pump F, the suction pipe of which goes to the bottom of the dye vat. By means of this arrangement the deposit formed in the vat can be regularly removed, and thus the dye-liquor be kept perfectly clear.

When the work of dyeing is finished for the day, the liquor in each vat is agitated for a few minutes by means of the mechanically driven agitators G. The vat is then allowed to rest until the morning. The clear liquor from the settling cisterns, which have been filled by means of the hand-pump the previous morning, is then run back into the dye vats,

through an outlet pipe, fixed about half-way in the depth of the cistern.

The sediment which has settled in the vats during the night is thus retained, and is pumped, by means of the hand-pumps, into the settling tanks, and allowed to stand in them for 24 hours, when the clear liquor is run back again, the solid deposit being retained as before. When the sediment has accumulated in the settling cisterns until it nearly reaches the level of the outlet pipe to the vat, which may take a month or more, it is treated with reducing agents, in order to extract all the indigo which it contains, and it is then run back into the vats. The residue is ultimately removed by means of a large outlet valve in the bottom of each cistern. Two pieces of cloth, back to back, may be dyed at the same time. A smaller number of vats is required for dyeing light shades.

The illustration shows a complete *Souring, Washing-off and Drying Range*, in connection with the indigo dyeing range. It consists of a range of five tanks, each 3 feet 6 inches long by 4 feet deep. The first tank, which contains the souring liquor, is made of wood and preferably lined with lead, and the four washing cisterns are provided with beaters as used in the open soaper. The cloth passes finally on to a drying range, with 12 to 20 cylinders, which may be of the upright type in order to save space. About 10 h.p. is required to drive the complete range.

In dyeing indigo it is of considerable importance to correctly adjust the amount of alkali present in the vat. An excess of alkali prevents the indigo from going on to the cotton, and it often produces uneven shades, whilst duller shades may result from shortness of alkali.

For further information as regards indigo dyeing see under "Vat Dyestuffs," p. 284.

Logwood or Campeachy Wood.

Logwood is the wood of a West Indian and Mexican tree, known botanically as *Hæmatoxylon campechianum*. The fresh wood contains a glucoside, which, when it decomposes, forms *hæmatoxylin*.

The colouring matter of the logwood is known as *hæmatein*, which is formed by the oxidation of hæmatoxylin.

In order to decompose the glucoside and to convert the hæmatoxylin into hæmatein the wood is either chipped or rasped, moistened with water and placed in heaps. The temperature in these heaps rises considerably, and it is, therefore, necessary to frequently turn the wood in order to avoid excessive fermentation and consequent destruction of the colouring matter. The process is called the *maturing* or *ageing* of logwood.

Aged logwood should be of a red-brown or crimson colour. It frequently contains more or less of the unconverted hæmatoxylin.

Logwood Extract.—Logwood extracts are obtained by extracting the fresh wood, either under pressure or without pressure. The extracts are sold in the liquid, or in the solid form. Extracts which have been specially oxidised contain chiefly hæmatein whilst the ordinary brands contain chiefly hæmatoxylin. The cheaper kinds are sometimes adulterated with molasses or with chestnut extract.

For certain shades the chipped or the rasped wood is preferred by dyers, because it produces richer and more brilliant blacks than can be obtained with the extracts.

Formerly logwood, with the addition of sulphate or acetate of copper, was used in dyeing heavy blues. The shades are, however, very fugitive.

Violet shades may be produced on cotton by dyeing with logwood on a stannous chloride mordant. The material is impregnated with a solution of stannous chloride, $1\frac{1}{2}°$ to $2\frac{1}{2}°$ Tw., passed through a solution of sodium carbonate, washed and dyed in logwood.

The chief application of logwood is in the dyeing of greys and blacks.

The colouring matter is extracted either from the chips or from the rasped wood, by placing them into bags which are suspended in the boiling water in the dye-vessel. After two or three extractions the wood is practically free from colouring matter.

A better method consists in boiling the wood in special boilers under pressure. About 160 lbs. of logwood chips are placed into a small kier and boiled three times with about 150 gallons of water at about 15 lbs. pressure.

The chief mordants used in black dyeing with logwood are iron salts. Aluminium salts, used in conjunction with iron salts, give blacks which are more violet in shade.

The Dyeing of Logwood Black.—The following methods of dyeing logwood black on cotton are in use:—

Method (1).—Cotton pieces are padded in the mangle with a solution of pyrolignite of iron (5° to 6° Tw.), dried, passed through lime-water, rinsed and dyed in a bath containing logwood and a small quantity of fustic extract. It is essential to use pyrolignite of iron which is free from sulphuric acid, or else the goods will be tendered. This method is also largely used for dyeing union goods (cotton warp and linen weft).

Method (2).—The cotton is first impregnated, preferably by steeping, with a solution of pyrolignite or nitrate of iron, which is afterwards fixed with soda ash or with lime-water. Iron-buff is formed on the fibres. The material is then dyed in logwood.

Method (3).—The cotton is steeped overnight in a tannin bath. Sumach, nut-galls, myrabolans, etc., may be used for this purpose. This is followed in the morning by a passage through an iron mordant, preferably pyrolignite, or nitrate of iron, then by a treatment with milk of lime or chalk. The goods are finally dyed in logwood.

In some cases the cotton is treated with lime or chalk immediately after the steeping in the tannin liquor.

Method (4).—A so-called *chrome black* is produced by entering the cotton into a boiling bath containing 10 to 15 per cent. of logwood extract, working it for some time and steeping overnight. After wringing the cotton is worked for half an hour in a cold bath containing 3 to 4 per cent. of bichrome and 3 to 4 per cent. of copper sulphate. It is then taken back to the logwood bath (with or without the addition of a further quantity of logwood extract), to which about 3 per cent. of soda ash has been added. If necessary the black may be "saddened" by adding some ferrous sulphate.

Method (5).—Equal parts of pyrolignite of iron and of aluminium acetate (5° Tw.), may be used together as a mordant. Arsenate of soda or sodium phosphate should be employed for fixing this mordant.

Method (6).—Catechu may be used as a mordant in place of sumach in dyeing logwood blacks. The cotton should be entered into the boiling catechu bath, steeped overnight and then fixed in a boiling solution of potassium or sodium bichromate. This should

be followed by a treatment with pyrolignite of iron and finally by dyeing with logwood.

Method (7).—M. Schutzenberger[1] gives the following method for dyeing a *chrome black* in a single bath:—Dissolve 3·3 lbs. of bichromate of potash in a small quantity of water, mix the solution with 100 gallons of logwood decoction at 3° Tw., and add 7·7 lbs., hydrochloric acid, 34° Tw. The cotton is introduced into the cold solution, and the temperature is very gradually raised to boiling point. The cotton acquires at first a deep indigo-blue shade, which changes to a blue-black on washing with a calcareous water.

A slight modification of this process consists in working the cotton in a solution containing at first only the bichromate of potash and hydrochloric acid, and adding the decoction of logwood to the dye-bath in small portions from time to time, gradually raising the temperature as before.

Method (8).—Logwood black may also be dyed in one bath, according to the following method: 15 to 20 per cent. logwood extract, 5 per cent. copper acetate, or 4 per cent. copper sulphate, and 4 per cent. soda ash. Enter the cotton into the cold dye-bath, and raise the temperature gradually to about 150° F.

Method (9).—Very good blue-blacks are produced by dyeing logwood black on cotton which has been first dyed blue in the indigo vat. The following is a special method, according to the *Deutsche Färberzeitung*.

The cotton yarn is boiled out in a solution of sodium silicate, rinsed, dyed a light blue shade in the indigo vat, soured with sulphuric acid and rinsed. It is then dyed with 15 per cent. of logwood extract and 1½ per cent. of copper sulphate, at a temperature of 122° F. Lift the yarn and allow to age in the air, wring and dry in a fairly hot stove. The colour is finally developed in a hot bath containing 3 per cent. of potassium bichromate. The yarn is now thoroughly rinsed, passed through a solution of Turkey-red oil and dried.

Cotton piecegoods are frequently dyed logwood black on continuous dyeing machines, similar to those which are used in dyeing the sulphur dyestuffs.

The method resembles that given below for the continuous dyeing of cotton warps.

[1] *Traité des Matières Colorantes.*

Black on 150 *lbs. of Loose Cotton.*—A very beautiful black may be dyed in the following manner:—Prepare the first bath by boiling out 10 lbs. of fustic chips, 10 lbs. catechu, 2½ lbs. copper sulphate. Enter the cotton into the boiling bath, boil for 1 hour, steep overnight. Take out in the morning and hydro-extract. Prepare a fresh bath with:—5 lbs. potassium bichromate, 5 lbs. copper sulphate. Enter the cotton at the boil and work for 2 hours. Take out, allow to drain, wash thoroughly, hydroextract and open the cotton well out.

The dye-bath is prepared by boiling out 70 lbs. logwood chips and 5 lbs. fustic chips; then add 1½ lbs. copper sulphate. Enter the cotton at the boil, work it well for 2 to 3 hours, until the shade required has been obtained.

Black on 150 *lbs. of Loose Cotton.*—25 lbs. sumach leaves, 15 lbs. catechu, 25 lbs. logwood chips. The catechu is dissolved in boiling water, the sumach and the logwood are filled into bags, which are suspended in the boiling dye-bath. Then add the catechu solution and 5 lbs. copper sulphate, enter the cotton, boil slightly for 1 hour, allow to remain in the bath overnight. Next morning lift the cotton out, boil 50 lbs. of logwood chips in the liquor, and add 7 lbs. of soda ash and 5 lbs. copper sulphate. Enter the cotton, allow to simmer for about half an hour, and leave the cotton in the bath from 6 to 8 hours. Then lift out, wash and dry, If fustic chips are used in place of the sumach, a somewhat duller black is obtained.

Logwood Black on 300 *lbs. of Cotton Yarn.*—Prepare the bath with:—20 lbs. sumach extract, 7 lbs. logwood extract, 3 lbs. fustic extract. Enter the yarn at 135° F., turn a few times and steep overnight. In the morning lay up and allow to drain. Then give 5 turns in a cold bath containing 25 lbs. ferrous sulphate and 9 lbs. chalk; wring out and treat for half an hour in the old sumach bath, wring and turn 5 times in a cold bath containing 7½ lbs. potassium bichromate; steep for half an hour, lift out, allow to drain, and dye 1 to 1½ hours with 15 lbs. of logwood extract, the decoction of 10 lbs. of logwood chips and 1½ lbs. soda ash; lay up, add 5 lbs. ferrous sulphate to the bath, turn 5 times, wash thoroughly, and oil with an emulsion of 9 lbs. cotton-seed oil and ½ lb. soap. Wring or hydroextract, and dry.

Logwood Black on Cotton Warps.—The warps are boiled in a two-box machine with extract of myrabolans. This is followed

by a passage through a three-box machine, the first 2 boxes containing lime-water, the 3rd box a solution of ferrous sulphate. The warps are now allowed to lie for some time.

The dyeing machine, which resembles an ordinary warp dyeing machine (Fig. 85, p. 364), consists of 8 boxes, total length from 35-40 feet. The 1st, 7th and 8th box are each about 5 feet, the other boxes each about 4 feet in length.

Lime-water is continuously supplied into box 1, whilst the boxes 2, 3, 4, 5 and 6 contain a solution of logwood extract.

Whilst the dyeing operation is proceeding, "hematine" solution is continuously supplied into box 6 only. From here the liquor passes by means of suitably placed overflow pipes into box 5, then into box 4, then into 3, and finally into box 2. In this box the nearly exhausted logwood liquor meets the freshly mordanted warp.

Nearly all the dyestuff is absorbed by the cotton, and the exhausted liquor is conducted away through an overflow pipe. From box 6 the warp, after having been squeezed, passes into box 7, which contains a weak solution of ferrous sulphate. In the 8th box the warp is finally rinsed in running water.

The warp may be dyed in "one run" if a machine about 80 feet in length is used, consisting of 10 boxes, each of which should be about 8 feet in length. The quantities required to dye 1,000 lbs. of warps are approximately:—40 lbs. logwood extract (hematine), 25 lbs. ferrous sulphate, 120 lbs. extract of myrabolans, 56 lbs. quicklime.

Logwood Black on Cotton Piecegoods.—In place of mordanting the cloth with iron liquor alone, which is apt to produce "bronzy" shades, a mixture of iron liquor and "red liquor" is frequently used. The cloth is passed through the mordant in a slop-padding machine and immediately run over the drying cylinders.

Preparation of the Padding Liquor:—6 gallons of iron liquor at 31° Tw., 3 gallons of red liquor at 16° Tw., and about 27 gallons of water. The specific gravity of the solution should be about 6° Tw.

The pressure on the bowls of the padding machine should be regulated so that a piece of 79 yards in length and 24½ inches in width, weight about 18 lbs., will take up about 2 gallons of this mordant. After drying, the pieces are aged in the

Mather-Platt and fixed in an open soaper. Various fixing agents may be used; good results are obtained by fixing in a solution containing about 3 ozs. of sodium binarsenate and 1½ ozs. of sodium phosphate, per gallon, with the addition of a small quantity of chalk. The pieces are passed through this solution in the first compartment of the open soaper at a temperature of about 70° C. After this the goods are first washed in boiling and then in cold water. If a large number of pieces be passed continuously through the machine, it is advisable to prepare a stock solution which is added from time to time in order to keep up the strength of the fixing bath. The pieces are dyed in rope form in the dye-beck. A small quantity of chalk is first added to the water in the dye-beck, and after this the requisite quantity of colouring matter. For 70 lbs. of cloth, 5 lbs. of logwood extract and ½ to ¾ lb. of fustic extract (or quercitron extract) will be required. The pieces are entered into the cold bath; the temperature is then raised within half an hour to the boil, at which temperature the dyeing is continued for half an hour. The goods are now washed and, if necessary, passed through a bath at about 60° C., containing about ¼ per cent. of potassium or sodium bichromate. They are finally washed and dried.

Fustic, Yellow Wood or Old Fustic.

Fustic is the wood of a tree belonging to the *Urticaceæ*, known as *Morus tinctoria*. Superior qualities are obtained from Cuba and Tampico. The colouring matter of fustic contains, according to Wagner, *morintannic acid* and *moric acid*. The wood is sold either as chips or raspings, or in the form of liquid or solid extract.

Fustic was formerly largely employed in dyeing yellow shades. It is now chiefly used for the purpose of shading logwood blacks and in conjunction with catechu for browns.

Dyed on tin and aluminium mordants, fustic produces yellows; on iron and copper mordants, yellow-olive shades; on chromium mordants brownish-yellow shades.

Greens may be obtained by dyeing cotton in the indigo vat, mordanting with aluminium acetate, fixing with sodium silicate, and finally dyeing with either fustic, quercitron bark, or weld.

Fustic is sometimes used for shading Aniline blacks.

Young Fustic or Fustet.

Young fustic is the wood of the tree *Rhus cotinus*.

It gives shades similar to those produced with quercitron bark and Persian berries. The shades are, however, very fugitive, and, therefore, little used.

Quercitron Bark.

Quercitron bark is the inner bark of a species of oak, *Quercus nigra*, or *Quercus tinctoria*, which grows chiefly in Pennsylvania and in North and South Carolina. The colouring matters contained in quercitron bark are *quercitrin* and *quercetin*.

The shades obtained by dyeing with a decoction of the bark are similar to those obtained with fustic.

Quercitron bark is sold as extract or in the form of powder.

Flavin, which gives stronger and brighter shades, is a preparation of quercitron bark.

Weld.

Weld is a kind of mignonette, *Reseda luteola*, which is cultivated in France and in other European countries. The colouring matter of the weld is *luteolin*. Shades obtained by dyeing weld on different mordants resemble those produced with fustic and with quercitron bark.

Turmeric or Indian Saffron.

Turmeric is the root of the *Curcuma tinctoria*, which grows in China and in the East Indies. The colouring matter contained in turmeric, *curcumin*, is readily soluble in alkaline solutions, but only slightly soluble in water. Cotton and other vegetable fibres may be dyed direct or with the addition of a small quantity of sulphuric acid or alum. Brilliant yellow shades, very fugitive to light and turning brown with soap and alkalies, may be obtained by dyeing with turmeric.

Persian Berries.

Persian berries are the dried unripe fruit of *Rhamnus*, a shrub which grows in the East and in Southern Europe. The yellows produced by *Persian berries* are redder than fustic or quercitron bark shades.

The colouring matter is chiefly used in calico printing.

Safflower or Bastard Saffron.

Safflower consists of the flower of *Carthamus tinctoria*. It contains two colouring matters, a yellow which is readily soluble

in water and a red which is insoluble. Previous to the introduction of the coal-tar dyestuffs, the red colouring matter of the safflower had been used extensively in Europe in cotton dyeing.

The author[1] found that the yellow colouring matter of the safflower had been used in the dyeing of mummy cloths of two mummies which belonged to the XIIth. dynasty, about 2,500 B.C.

Red Wood,—Brazil Wood,—Sapan Wood,—Lima Wood or Pernambuco Wood.

These woods are known as *soluble red woods*, because the colouring matter, *brasilin*, which they contain in the form of a glucoside, is readily soluble in water. The woods belong to the various species of the genus *Cæsalpina* which grow in Brazil, Mexico, Peru and the East Indies. The red woods are sold in the form of chips, raspings, or extracts. Dyed on aluminium mordants they give dull bluish-red shades; on tin mordants scarlet shades, which are very fugitive.

Barwood,—Camwood,—Sandal Wood,—Saunders Wood or Gaban Wood.

These woods belong to the class of *insoluble red woods*, because the colouring matter which they contain is practically insoluble in water. They are used in the form of raspings. Imitations of Turkey-red were formerly obtained by dyeing barwood on a tin mordant.

Barwood shades are faster than shades obtained by dyeing with the soluble red woods.

Madder.

Madder is the root of the *Rubia tinctorium*. It was formerly very extensively employed in dyeing Turkey-red. Madder was formerly cultivated in many European countries, but it has been entirely replaced by the Alizarines. The colouring matters contained in the madder root in the state of glucosides are *alizarine* and *purpurine*. The latter produces yellower shades than the former. The application of madder in cotton dyeing is identical with that of Alizarine.

Catechu,—Cutch,—Terra Japonica or Gambier.

Next to logwood, catechu is one of the few of the natural

[1] *Journ. Soc. Dyers and Colourists*, Vol. XXV., 223—227, 1909.

colouring matters which is still extensively employed in cotton dyeing.

The *Bengal catechu* is obtained from *Acacia catechu*, the *Pegu* or *Bombay catechu* from *Areca catechu*, and the *Gambier* from *Uncaria Gambier*. All the different kinds of catechu contain *catechutannic acid* and *catechin*. Catechu is excellently suited for the dyeing of heavy brown shades, which are remarkable for their fastness. Catechu is frequently used as a mordant for the basic dyestuffs. Useful shades, very rich *over hand*, are produced by dyeing colours such as Magenta, Bismarck Brown, Methyl Violet, etc., on a catechu "bottom."

Catechu should be dissolved in boiling water with the addition of about 5 per cent. of copper sulphate, calculated on the weight of the catechu. The cotton should be entered into the hot dye-bath (180° to 212° F.), worked for ½ to 1 hour, when dyeing light shades, whilst for dark shades it is better to work for half an hour and to steep the cotton overnight. The material is now wrung or hydroextracted and the colour is developed and fixed in a fresh hot bath containing potassium or sodium bichromate.

It is doubtful as to whether this method gives the most economical results, especially if the catechu bath has to be used repeatedly. Developing of the colour in a fresh bath with copper sulphate will, in many instances, give better results.

For heavy shades the cotton may be treated with the catechu solution and then passed through a bath containing an iron mordant, such as pyrolignite of iron, or ferrous sulphate. The material is finally chromed.

A great number of shades are obtained by adding logwood, fustic, etc., to the catechu bath, or by topping catechu shades with these colouring matters.

In conjunction with logwood, catechu is also used in dyeing blacks on cotton. The material is treated first with catechu, or with catechu and logwood extract, then with an iron mordant, afterwards dyed with logwood and finally fixed with bichrome.

Another method consists in drying the material after the impregnation with catechu and before the fixing with bichrome.

Catechu is also extensively used in dyeing sail-cloth and yarn used in the manufacture of fishing nets. It exerts a preservative action on cotton, *i.e.*, it prevents it from becoming rotten after impregnation with the sea-water.

The following natural colouring matters, are of no interest to the cotton dyer:—

Cochineal, Ammoniacal Cochineal, Lac-dye, Kermes, Orchil, Cudbear, Annatto, Orlean.

In the following a few methods of dyeing browns, greys, etc., with catechu, logwood, etc., are given.

Grey on 150 *lbs. of Loose Cotton.*

30 lbs. logwood chips, 10 lbs. fustic chips and 10 lbs. catechu. Boil for one hour, then add slowly 2½ lbs. soda ash, 5 lbs. copper sulphate and 1 pint pyrolignite of iron. Enter the cotton, work near boiling point for 1 hour, steep overnight, lift out in the morning, allow to drain and wash.

Medium Grey on 100 *lbs. of Cotton Yarn.*

Work the yarn for about half an hour in a bath containing 35 gallons of a decoction of logwood (see p. 171), with the addition of a small quantity of soda ash. Wring and treat for half an hour in a fresh bath with 3 lbs. ferrous sulphate and 1¼ ozs. soda ash. Rinse, wring and pass again through the first bath, wring, pass through the second bath, wash, soap and dry.

Light Grey on 100 *lbs. of Cotton Yarn.*

Treat as given for medium grey with 18 gallons of logwood, 2 lbs. ferrous sulphate and 1 oz. soda ash.

Medium Grey on 60 *lbs. of Cotton Yarn.*

Work the yarn for half an hour in a cold bath containing 2 lbs. sumach extract and 1 lb. quercitron extract (solid); wring or hydroextract and treat cold with 2 lbs. ferrous sulphate and 1 lb. nitrate of iron; allow to drain, and finish with 2 lbs. of alum at 110° F., wash, wring and dry.

Medium Yellowish-brown on 50 *lbs. of Cotton Yarn.*

Work the yarn for half an hour at 156° F., in a bath containing 6 lbs. catechu, 1 lb. quercitron extract (solid) and 3 lbs. turmeric. Allow to drain, and turn for a quarter of an hour in a fresh bath with 1½ lbs. bichrome, at 156° F. Allow to drain and pass through a bath at 110° F., containing 2 lbs. alum. Wash and dry.

Dark Brown on 50 *lbs. of Cotton Yarn.*

Work the yarn for 1 hour at 170° F., in a bath containing 14 lbs. catechu, 4 lbs. logwood extract (solid), 2 lbs. quercitron

extract (solid). Allow to drain and work for a quarter of an hour at 170° F., in a bath with 2 lbs. bichrome. Wash and dry.

Light brilliant Yellow on 50 *lbs. of Cotton Yarn.*

Prepare a bath with 14 lbs. turmeric and 8 ozs. sulphuric acid. Turn the yarn for a quarter of an hour at the boil. Rinse and dry.

Dark Maroon on 50 *lbs. of Cotton Yarn.*

12 lbs. catechu, 1 lb. copper sulphate, 4 lbs. logwood extract (solid). Enter the yarn at 190° F., give a few turns and steep overnight. Lay up in the morning and fix for a quarter of an hour at 190° F., with 3 lbs. bichrome. Return to the first bath, to which 4 lbs. of logwood extract have been added, work for half an hour, wring and pass through an emulsion of soap and oil. Wring and dry.

Brown on 150 *lbs. of Loose Cotton.*

Prepare the bath with 35 lbs. catechu, 7 lbs. logwood extract, 7 lbs. quercitron, 7 lbs. copper sulphate. Enter the cotton, boil for 1 hour, steep overnight. Take the cotton out in the morning, allow to drain, hydroextract and enter into a boiling bath containing 2½ lbs. copper sulphate and 5 lbs. bichrome. Allow the cotton to remain in this bath for 2 hours, lift out, drain, and allow to age for some time. Wash thoroughly and dry.

Catechu Brown on Cotton Warps.

A solid cutch brown on cotton warps may be dyed in a 5-box warp dyeing machine. See p. 364. The width of the boxes is 2½ feet, the depth 2½ feet. The length of the first 4 boxes is 4 feet each, that of the 5th box, 5 feet.

In the 1st and 2nd box the warp is impregnated with the catechu solution which has been prepared with the necessary quantity of copper sulphate. The 3rd box contains water, the 4th the bichrome solution. In the 5th box the warp is rinsed in running water.

Approximate quantities required for dyeing 300 lbs. of cotton: 1 cwt. catechu, 15 lbs. copper sulphate, 30 lbs. bichrome. The warp should be well boiled either in a high-pressure or a low-pressure kier and squeezed before dyeing.

A certain amount of catechu is removed by the slight rinsing given in the 3rd box, but it has been found that the shades of brown produced are much cleaner (less "dusty") than if the rinsing is omitted and the warp passed directly into the bichrome bath.

THE ARTIFICIAL DYESTUFFS

Abbreviations used in Parts VIII. to XIV.

Ba.	Badische Anilin und Soda-Fabrik, Ludwigshafen-on-Rhine.
BAC.	The British Alizarine Company, Limited, Silvertown, London.
Be.	Actien Gesellschaft für Anilin-Fabrikation, Berlin.
By.	Farbenfabriken, vorm. Fr. Bayer & Co., Elberfeld.
C.	The Clayton Aniline Company, Limited, Manchester.
Ca.	Leopold Cassella & Co., G.m.b.H., Frankfort-on-Maine.
CI.	Society of Chemical Industry, Basle.
Cl.	Claus & Co., Droylsden, near Manchester.
Da.	Wuelfing, Dahl & Co., Act.-Ges., Barmen.
DH.	L. Durand, Huguenin & Co., Basle.
G.	Aniline Colour and Extract Works, formerly J.R., Geigy, Basle.
H.	Read, Holliday & Sons, Limited, Huddersfield.
J.	Carl Jäger, Düsseldorf-Derendorf.
Ka.	Kalle & Co., Act.-Ges., Biebrich-on-Rhine.
Leo.	Farbwerk Mühlheim, formerly A. Leonhardt & Co., Mühlheim.
Lev.	Levinstein Limited, Blackley, Manchester.
ML.	Farbwerke vorm. Meister, Lucius & Brüning, Hoechst-on-Maine.
Oe.	Chemische Fabrik Griesheim-Elektron, Werk Oehler, Offenbach-on-Maine.
OSF.	Erste Oesterreichische Soda Fabrik, Hruschau.
Poir.	Société Anonyme des Matières Colorantes et Produits Chimiques de Saint-Denis (A. Poirrier and G. Dalsace), Paris.
Sa.	Sandoz Chemical Works, Basle.
Sch.	The Schoellkopf Aniline and Chemical Co., Buffalo.
W.	Chemische Fabriken vorm. Weiler-ter Meer, Uerdingen-on-Rhine.

PART VIII

BASIC COTTON DYESTUFFS

(Dyestuffs which are chiefly Dyed on Tannin Mordant.)

[In the following tables the figures before the name of a dyestuff, *e.g.*, (1, 2, 3), indicate the special methods of dyeing described in Part VIII., which may be applied, while the letters after the name, *e.g.*, (Ba.), denote the name of the maker or makers.]

Yellows and Oranges.

Acridine Golden Yellow (Leo.).
Acridine Oranges (Leo.).
Acridine Yellows (Leo.).
Aniline Yellow (Ca.).
Auracine (By.).
(1, 6) Auramine (Ba., Be., By., CI., G., H., J., Ka., Leo., Lev., ML., Sa., W.).
Aurophosphine (Be.).
(1) Azophosphine (ML.).
Benzoflavine (Oe.).
Brilliant Phosphines (Be., CI.).
(1) Chrysoidines (Ba., Be., By., Ca., CI., Cl., Da., G., H., J., Ka., Leo., Lev., ML., Oe., Poir., W.).
Corioflavines (Oe.).
Coriphosphines (By.).
Cotton Orange (Da.).
Diamond Phosphine (Ca.).
Euchrysine (Ba.).
Fast Cotton Yellow (Da.).
Flavazol Yellow (Da.).
Flavinduline (Ba.).
Flavophosphine (ML.).
Homophosphine (Leo.).
(1, 2, 3, 4) Janus Yellow (ML.).
Leather Yellows (Da., Ka., Leo., ML.).
(1) Methylene Yellow (By., ML.).
New Acridine Orange (Leo.).
New Phosphine (Ca.).
Para-Phosphine (Ca.).
Patent Phosphines (CI.).
Philadelphia Yellow (Be.).
(1) Phosphines (Ba., Be., Ca., Cl., Da., H., J., Ka., ML., Oe., Poir., W.).
Rheonine (Ba.).
Rhoduline Orange (By.).
Rhoduline Yellows (By.).
Tannin Oranges (Ca.).
Thioflavines (Ca.).
Yellow (Be.).
Xanthine (Poir.).

Reds.

Acetate Magenta (H.).
Acridine Reds (Leo.).
Acridine Scarlets (Leo.).
Aniline Maroon (Ca.).
Aniline Scarlet (W.).
Anisoline (Monnet).
Bordeaux (Ka., W.).
Brilliant Rhoduline Red (By.).
Brilliant Rose (Leo.).
Brilliant Saffranine (Be.).
(1) Camelia (Be.).
(1) Cardinal (Be., ML.).
Cardinal Red (W.).
Carthamines (W.).
(1) Cerises (Ba., Be., Ca., Da., G., H., Ka., ML., W.).
Clematine (G.).

Cotton Reds (Lev.).
Diamond Magenta (Ba., By., Da., CI.).
Fast Pinks (Da.).
Fast Red, 4198a (Leo.).
Geranium (Ca.).
(1) Grenadine (H., Oe., ML.).
Irisamine (Ca.).
(1) Isorubine (Be.).
(1, 2, 3, 4) Janus Red (ML.)
(1) Magenta, Fuchsine or Roseine (Ba., Be, By, Ca., CI., Cl., Da., G., H., J., Ka., Leo., ML., Oe., Poir, Sa., W.).
Magenta Powder (Ba.).
Magenta Scarlet (Ba.).
(1) Maroon (H., ML.).
Neutral Red (Ca.).
(1) New Magenta (ML., By., Oe.).
Pyronine (Leo.).
(1, 6) Rhodamines (Ba., Be., By., CI., Ka., ML., Sa.).
(1) Rhodamine Ponceau (ML.).
Rhoduline Pinks (By.).
Rhoduline Red (By.).
Rhoduline Scarlet (By.).
(6) Rosazeine (Ca.).
Rosole Red (By.).
Rosole Scarlet (By.).
Rubine (Ba., Be., Da.).
Russian Red (Ca., Oe.).
(1, 4, 6) Saffranine (Ba., Be., By., Ca., CI., Cl., Da., H., J., Ka., Leo., ML., Oe., Poir, Sa., W.).
Saffranine Scarlet (Ba., Leo., ML.).
Scarlet (Da.).
(1) Scarlet for Cotton (Ca., ML.).
Tannate Fast Scarlet (Da.).
Tannate Rubine (Da.).

Blues and Violets.

Acetin Blue (CI.).
Acetinduline (Ca.).
Alkali Blues (CI.).
Alkaline Blue RRR to 6B (Ca.).
Azure Blue (H., Sa.).
Basle Blue (DH.).
Bengal Blues (G.).
(5) Blackley Blues (Lev.).
(5) Bleu de Lille (Oe.).
Brilliant Blue (Sa.).
Brilliant Cresyl Blue (Leo.).
Brilliant Diazine Blues (Ka.).
Brilliant Glacier Blue (CI.).
Brilliant Rhoduline Purple (By.).
Brilliant Victoria Blues (CI.).
Capri Blue (Leo.).
(5) China Blue (ML.).
Clematine (G.).
(5) Conc. Cotton Blues (ML.).
(5) Cotton Blues (Ba., Da., G., ML., Oe., Poir.).
(5) Cotton Light Blue (ML.).
Cresyl Blue (Leo.).
Cresyl Fast Violets (Leo.).
(1) Crystal Violet (Ba., By., Ca., CI., Da., G., ML., Sa., W.).
Dark Blue (Ba.).
Diazine Blue (Ka.).
Diphen Blue (Be.).
(1) Ethyl Blue (ML.).
Ethyl Purple (Ba., CI.).
Ethyl Violet (Crystal Violet), (CI.).
Fast Blue (CI., Ka., Leo., Sa., W.).
Fast Blue for Cotton (Be., Poir., Oe.).
(1) Fast Cotton Blues (ML.).
Fast Navy Blues (Ka., Oe.).
Fast Neutral Violet (Ca.).
(1) Fast New Blue (ML.).
Gentianine (G.).
Glacier Blue (CI.).
Heliotropes (Ka., Leo.).
Helvetia Blue (G.).
Hofmann's Violet (Poir.).
(1, 4) Indamine Blue (CI., ML.).
Indazines (Ca.).
Indine Blues (Lev.).
Indoine Blue (Ba., G.).
(4) Indol Blue (Be., Leo.).
Indone (Ca.). [Madras Blue (Poir.)].
Indone Blues (By.).
(1) Indophene Blue (ML.).
(1, 2, 3, 4) Janus Blue (ML.).
(1, 2, 3, 4) Janus Dark Blue (ML.).
Jute Blue (Oe.).
Light Blue for Silk (Be.).

Madras Blue (Poir.).
Malta Blue (Poir.).
(1) Marine Blues (Ba., ML., Sa., W.).
Meldola's Blue v. New Blue.
Metaphenylene Blues (Ca.).
Methyl Blues (Be., Ca., ML.).
(5) Methyl Blue for Cotton (Ka., Oe., ML.).
(5) Methyl Cotton Blues (Da.).
(1) Methylene Blues (Ba., Be., By, Ca., Cl., G., H., J., CI., Ka., Leo., ML., Oe., Poir., Sa., W.).
(1) Methylene Dark Blue (ML.).
(1) Methylene Heliotrope (ML.).
(1) Methylene Indigo O, SS (ML.).
(1) Methylene Violets (ML.).
Methyl Indones (Ca.).
(1) Methyl Violets (Ba., Be., By., Ca., Cl., CI., Da., G., J., Ka., Leo., Lev., ML., Oe., Poir., Sa.).
Muscarine (DH.).
Naphthol Blues (Da., W.).
(4) Naphtindones (Ca.).
Navy Blue D. (Oe.).
Neutral Blue (Ca.).
Neutral Violet (Ca.).
New Blues (Meldola's Blue) (Ba., By., Ca., CI.).
New Cotton Blues (Leo.).
New Ethyl Blue (ML.).
New Metamine Blue (Leo.).
New Methylene Blue (By., Ca.).
New Victoria Blue (By., CI., M.L.).
Night Blue (Ba., CI., Sa.).
Nile Blue (Ba.).
Paraphenylene Blue (Da.).
Paraphenylene Violet (Da.).
Paris Violets (Methyl Violets) (Poir.).
Peacock Blues (Ka.).
Phenine Dark Blue (Da.).
Phenine Navy Blue (Da.).
Printing Blue (Ca.).
Pure Blue (Ka., Oe., ML.).
Red Blue in grains (Oe.).
Red Violet (W.).
Rhoduline Heliotrope (By.).
Rhoduline Sky Blue (By.).
Rhoduline Violet (By.).
(1) Rosolan BO (ML.).
Setocyanine (G.).
Setoglaucine (G.).
Setopaline (G.).
Solid Blue (Ca.).
(5) Soluble Blues (Ka., CI., Oe., Sa.).
Swiss Blue (H.).
Tannate Violet (Da.).
Tannin Heliotrope (Ca.).
Thiazine Blue (G.).
(1) Thionine Blue (Bc., ML.).
Toluidine Blue (Ba.).
Toluylene Blue (Oe.).
Turquoise Blue (By.).
(1, 2, 3, 4) Victoria Blues (Ba., Be., By., CI., J., Ka., H., ML., Sa., W.).
Victoria Pure Blue (Ba.).
Violet C (Poir.).
(5) Water Blues (Be., Ca.).

GREENS.

Azine Green (Leo.).
Benzol Green (Oe.).
(1) Brilliant Green (Ba., By., Ca., Cl., Da., G., H., J., Leo., ML., Oe., Poir., Sa., W.).
Capri Greens (Leo.).
China Green (By.).
Diamond Green (Ba.).
Diazine Green (Ka.).
Emerald Green (Da.).
Ethyl Green (Be.).
Fast Greens (CI.).
Green Powder (H.).
Imperial Green (By.).
(1, 2, 3, 4) Janus Green (ML.).
Leaf Green (Be.).
Light Green (Leo., Poir., W.).
(1) Malachite Green (Ba., Be., Ca., Cl., G., H., J., Ka., ML., Sa., W.).
(1) Methylene Green (Ba., By., Cl., G., Ka., ML., Sa., W.).
New Fast Greens (CI.).
Solid Green (Ca., Leo.).
Tannate Dark Green (Da.).
Tannate Fast Green (Da.).
Victoria Green (Ba., J).
Zinc Green (J.).

BROWNS.

Acridine Brown (Leo.).
(1) Bismarck Browns (Manchester Brown) (Be., By., Ca., CI., Cl., Da., H., J., Ka., Leo., Lev., Oe., Poir., Sa., W.).
Brown G. & R. conc., (G.).
(1) Cutch Brown (G., ML.).
(1) Dark Brown (ML.).
Excelsior Brown (Da.).
(1, 2, 3, 4) Janus Brown (ML.).
Leather Brown (By., Ca.).
Nut Brown (Ca.).
Phenylene Brown (W.).
Rheonine (Ba.).
Tannin Brown (Ca.).
(1) Vesuvine (Ba., Da., J., ML.).

VARIOUS.

Black for artificial Silk (Ca., W.).
Diazine Black (Ka.).
Direct Grey (Poir.).
Fast Grey R (Oe.).
Grey NO (Sa.).
Grey (Poir.).
(1, 2, 3, 4) Janus Blacks (ML.).
(1, 2, 3, 4) Janus Grey (ML.).
Jet Black (Ba., J.).
Jute Blacks (Ba., Be., Ca., CI., Lev., W.).
Logwood Substitute (W.).
Malta Grey (Poir.).
(1, 4) Methylene Grey (ML., Sa.).
Neutral Black (W.).
New Fast Grey (By.).
Nigrisine (Poir.).
Silk Grey, fast to water (ML.).
Special Grey (Poir.).
Tannate Fast Black (Da.).
Tannate Greys (Da.).

The Basic Dyestuffs are especially marked by their brilliancy and richness of shade. Their colouring power is superior to that of the *substantive cotton dyestuffs*, but they are, generally speaking, fugitive to light and do not stand washing very well. Although still largely used, they have been replaced to a considerable extent by the substantive dyestuffs.

APPLICATION OF THE BASIC COTTON DYESTUFFS.

Dissolving of the basic dyestuffs.—The dyestuff should be stirred up with a small quantity of boiling condensed water; then gradually add more boiling water, stir and boil for a short time. If standard solutions are prepared care must be taken to make them sufficiently dilute in order to prevent crystallisation of the dyestuff when the solution becomes cold.

Auramine solutions should not be heated above 160° to 170° F.

Solutions of *Bismarck Brown* and *Chrysoidine* should be boiled a few minutes only.

Victoria Blues should be stirred with acetic acid, *Fast Blue for Cotton* with acetic acid or hydrochloric acid, and some of the cheaper kinds of *Magenta* with hydrochloric acid, before the boiling water is added.

Diphene Blue B & R Base (Be.), 80 parts of which are equal

to 100 parts of *Diphene Blue B & R* (Be.), is dissolved in the following manner:—Stir to a paste 1 part of the Base with 2 parts boiling water, add 2 parts acetic acid (30 per cent.), allow to stand for a short time, and then dissolve in boiling water.

Dyeing with the Basic Dyestuffs on Tannin Mordant.

The principal mordants employed for fixing the basic dyestuffs are the tannins. The purest shades are obtained when tannic acid is employed. The other tannin materials, such as sumach, nut galls, myrabolans, etc., tint the cotton more or less, a fact which requires to be taken into consideration when employing these materials for mordanting.

Sumach leaves, if used in place of tannic acid, are placed into a bag and boiled for ½ to 1 hour in the bath.

The application of catechu as a mordant for basic colours has been described under "Catechu." In the following part the application of tannic acid will be discussed. The corresponding quantities of other tannins which may be used in place of tannic acid depend upon the amount of tannic acid which the material used contains. The necessary information will be found under "Tannins." The amount of tannic acid used depends upon the quantity of dyestuff which has to be fixed upon the fibres. If the amount of tannic acid used is largely in excess of that required, uneven dyeings will result and the shades will suffer as regards brilliancy; whilst, on the other hand, the fastness of the dyeings will be inferior if the quantity of mordant is too small.

The cotton should be well boiled, and rinsed or soured and rinsed, before mordanting with tannic acid. The temperature of the mordanting bath, when entering the material, ought to be near boiling point, but the liquor must be allowed to cool during mordanting. For heavy shades the cotton is entered into the bath, containing 2 to 6 per cent. of tannic acid, worked for some time and then steeped for some time in the liquor, usually overnight. For light shades the cotton is worked in ½ to 2 per cent. of tannic acid for 1 to 2 hours.

The proportion of cotton to liquor should be about 1 : 15 or 1 : 20. The tannin bath may be used repeatedly; one half of the quantity of tannic acid added to the first bath has to be added for every subsequent lot of cotton.

Boiling, or wetting out of the material before the treatment with tannic acid, is not always necessary. For dark shades the cotton may be directly immersed in the hot tannic acid bath. An addition of Turkey-red oil, or, better still, of Monopole soap to the mordanting bath will greatly assist even penetration. Such an addition is also of advantage in mordanting very hard twisted yarns or heavy piecegoods.

After impregnation with tannic acid the cotton is squeezed, wrung, or hydroextracted, and is then ready for the fixing with tartar emetic or with another antimony salt. In very few cases only is the impregnated material dyed without previously fixing the tannin with an antimony salt, because shades obtained in this manner are not fast. The corresponding amounts of the different antimony salts which may be used in place of tartar emetic are given on p. 31.

The fixing bath is usually employed cold or warm, and it should contain from 1 to 4 per cent. of tartar emetic. It may be employed repeatedly, but as it becomes gradually more and more acid, it requires neutralising with either chalk or soda ash. When using the latter the solution should be added carefully until the bath becomes slightly turbid.

The cotton should be thoroughly rinsed after fixing and before dyeing. In some instances, especially when a very strong mordant has been applied, the rinsing may be followed by weak soaping. Rinsing after the soaping is not always necessary. Some of the mordant which loosely adheres to the fibres is removed by the soaping, with the result that faster and more even shades are obtained.

Very heavy shades are dyed on a tannin mordant which has been fixed with an iron salt, usually pyrolignite, or nitrate of iron. Shades produced on this mordant are, however, not as fast as those obtained by dyeing on a tannin tartar emetic mordant. After treating in the usual manner in the tannin bath, followed by wringing or hydroextracting, the material is worked for 10 to 20 minutes in a cold bath of pyrolignite or nitrate of iron, which stands at from $1\frac{1}{2}°$ to 4° Tw. Then rinse thoroughly and, if necessary, pass through a bath containing some chalk. From 2 to 4 per cent. of ferrous sulphate may be used in place of the other iron mordants, the shades are, however, not as good as those obtained when using the pyrolignite.

The tannic acid is better fixed, and faster shades are ultimately produced, if the cotton, mordanted with tannin and iron, is finally passed through a bath containing tartar emetic, or if the tannin is first fixed with tartar emetic and the iron salt is applied afterwards.

The dye-bath should not be too concentrated, and hard water ought to be corrected by adding the necessary amount of acetic acid. In order to prevent the dyestuff from exhausting too rapidly an addition of 2 to 5 per cent. of acetic acid or alum is made to the dye-bath. When dyeing *Soluble Blues*, *Fast Blues* and *Nigrosines* on a tannin mordant, from 5 to 10 per cent. of alum should be added.

Enter the cotton into the cold dyebath and add ¼th or ⅓th of the total dyestuff solution. Work for some time, add another part of the solution, and so on until the whole of the dyestuff has been added. When the bath is nearly exhausted heat gradually to 150 to 200° F., and work the cotton for some time after the steam has been shut off. The material may be dried without rinsing, or it may be rinsed and, if necessary, slightly soaped. The fastness of shades dyed with the basic dyestuffs is considerably improved if the cotton, after dyeing, is passed through tannic acid, and then through tartar emetic. The old mordanting liquors may be used for this purpose. The fact that by this treatment the shades become somewhat duller must, however, be taken into consideration.

Shades which are fast to a boiling soap solution may be obtained by this method with the following dyestuffs:—*Acridine Reds*, *Acridine Scarlets*, *New Acridine Orange*, *Pyronine G*, *Capri Greens*, *Capri Blues*, *Cresyl Blues*, *Brilliant Cresyl Blue 2 B*, *Fast Blue*, *Indol Blue F*, *New Metamine Blue M*, *Cresyl Fast Violets*.

Shades dyed with *Azure* and *Victoria Blue* become brighter and more level if the goods are soured after dyeing for ¼ to ½ hour at 140° F., with 1 to 3 per cent. sulphuric acid (D.O.V.). This treatment is followed by rinsing and soaping with 10 to 15 per cent. of soap at 140° to 180° F.

Special Methods of Dyeing with the Basic Dyestuffs.

In the following some special methods will be described which are less frequently used in dyeing with the basic cotton dyestuffs.

Method (1).—*Basic dyestuffs dyed in one bath.* Patented by Meister, Lucius and Brüning.

Prepare the cold dye-bath with 6 to 8 per cent. acetic acid; then add 1 to 2 per cent. tannic acid and finally the dyestuff solution (up to 1 per cent.). Enter the cotton, work ½ hour cold, then ¼ hour at 104° F. and for ¼ hour at 140° F., rinse, wring, dry. Faster shades are obtained by the following treatment: After dyeing as above, wring and add to the first rinsing bath ½ to 1½ per cent. tartar emetic. Turn a few times in this bath, rinse and dry. For the purpose of shading small quantities of dyestuffs may be added to the tartar emetic bath.

The *Janus Dyestuffs* take a position between the direct dyeing and the basic dyestuffs. They exhibit a strong affinity both towards the vegetable and the animal fibres. Deep shades may be obtained on cotton by dyeing with these dyestuffs with the addition of alum, acetate of zinc, chromium fluoride, or weak acids.

True tannin lakes are formed by an after-treatment with tannins and tartar emetic.

The following methods are recommended:—

Method (2). *Dyeing.*—Acidulate the dye-bath with acetic acid, add 5 per cent. sulphate of zinc and part of the dyestuff solution. Enter the cotton at about 90° C. (194° F.), turn a few times and add the remaining dyestuff solution in several portions. After ½ hour add 20 per cent. common salt or calcined Glauber's salt, work for ½ hour near the boil, turn the steam off and work for ½ hour. Rinse, wring, or hydroextract.

Fixing.—Enter the dyed cotton into a cold bath containing 2 to 6 per cent. tannic acid or the corresponding quantity of sumach, work for ½ hour, lay up, add 1 to 3 per cent. tartar emetic and 1·5 per cent. of strong sulphuric acid, enter, turn ¼ hour cold, ¼ hour at 50° C. (122° F.), ¼ hour at 80° to 100° C. (176° to 212° F.), rinse thoroughly and dry.

Method (3).—*Dyeing* as in Method (1).

Fixing. First Bath.—Enter the cotton into a "short" bath with the addition of 2 to 6 per cent. tannic acid (or a corresponding quantity of another tannin material), work for ¼ hour at 50° C. (122° F.), steep for some hours or overnight, wring or hydroextract.

Second Bath.—Work in a fresh cold bath with the addition of 1 to 3 per cent. tartar emetic for ½ to ¾ hour, rinse, soap, if necessary, and dry.

Method (4).—*Dyeing on unmordanted cotton*, with the addition of acids or acid salts, such as alum, acetate of zinc, fluoride of chromium.

Naphtindon.—Add 3 per cent. of aluminium sulphate to the dye-bath, turn a few times, then add the dyestuff solution. When all the dyestuff has been added, raise the temperature to boiling and work at this temperature for 20 to 30 minutes.

Naphtindon BB and Irisamin.—These dyestuffs may also be dyed in a bath containing 30 to 50 lbs. of common salt per 100 gallons of liquor. Irisamin should be dyed at 122° to 145° F. After dyeing wring and dry at a low temperature.

When dyeing with Naphtindon enter the material at 122° to 145° F., gradually raise the bath to the boil and finally rinse the cotton.

Indol Blue.—Indol Blue may be dyed direct by adding 5 per cent. alum or 3 per cent. aluminium sulphate, 10 per cent. common salt, and the necessary quantity of dyestuff to the bath. Dye at 180° F. for 1 hour. For very deep shades the additions must be increased, but it is not advisable to add more than 20 per cent. common salt and 10 per cent. alum. After dyeing rinse and work the material in a fresh bath for ½ hour at 85° F., with 1½ times the quantity of tannic acid as that of dyestuff used. The tannic acid is almost completely exhausted. The dye-bath is not exhausted. For subsequent dyeings, alum and salt should be added in proportion to the amount of fresh liquor added. Redder shades are produced when working in a tannic acid bath at a lower temperature, whilst at higher temperatures the shades become more greenish in tone.

If the fixing bath is prepared with equal quantities of tannic acid and acetic acid, dyestuffs, such as *Saffranine*, *Methylene Blue*, *Methyl Violet*, etc., may be added to the bath for shading purposes.

Method (5). *Tin or Tin and Tannin Mordant.*

Enter the well-boiled bleached cotton into a cold bath containing 0·1 to 1 per cent. of tin salt and a sufficient quantity of

hydrochloric acid to produce a clear bath; work for ½ hour, lift, rinse and dye cold with the addition of 1 to 2 per cent. acetic acid. Wring or hydroextract without rinsing and dry.

For very heavy shades:—Mordant with 2 to 3 per cent. tannic acid, and then treat with the tin mordant as above, rinse and dye at 104° F., with the addition of 2 to 3 per cent. alum, or 1 to 2 per cent. acetic acid.

Method (6). The *Rhodamines*, *Rosazeines*, either alone, or in combination with *Auramine* and *Saffranine*, give very beautiful shades when dyed on one of the following Turkey-red oil mordants.

(1) 2 lbs. of bleached and dried cotton yarn are impregnated at a time in 1 part Turkey-red oil F (Ba.), and 2 parts water. The impregnation is carried out as in dyeing Turkey-red on cotton yarn. For every succeeding 2 lbs. of yarn sufficient liquor should be added to keep the volume of the impregnating bath constant. After impregnation the yarn should be wrung evenly and dried. This operation may be repeated once or twice. The yarn is dyed in the cold dyestuff solution, wrung or hydroextracted and dried.

(2) Work the bleached, dried yarn for 20 minutes at 100° F., in a solution of 1 part of Turkey-red oil in 10 parts of water, wring and dry. A solution of soap may be used in place of Turkey-red oil. Now work the yarn for ½ hour at 120° F. in aluminium acetate, 7° to 10° Tw., wring and dry, or rinse thoroughly. The yarn is finally dyed in a lukewarm solution of Rhodamine, wrung and dried.

Rhodamine S and S extra.

For bright Pinks the yarn is mordanted in the usual manner with tannic acid, wrung and passed through a bath containing 20 gallons of aluminium acetate, 9° Tw. per 100 gallons of liquor. Rinse and dye in Rhodamine.

Rhodamine 6G, 3G, S, Diamond Green G, B, Methylene Blues.

Light shades may be dyed with basic dyestuffs in the following manner:—Bleach the cotton, soap, rinse and dye in a bath containing 1 to 2 per cent. acetic acid, 9° Tw., wring without rinsing and dry. The harder the water used in dyeing the more acetic acid will be required.

Indone Blue, Victoria Blues, Indoine Blue, Soluble Blues.

Dye in a "short" lukewarm bath, with the addition of 1 to 4 per cent. alum, bring slowly to the boil, turn the steam off and work for a short time. Wring and dry. Indone Blue and Indoine Blues should be worked for ½ hour in the boiling bath, then slightly rinsed and dried.

Pure Blues, Water Blues.

Enter the boiled out cotton into a bath containing the requisite amount of dyestuff, and in addition about 10 lbs. alum and 1½ lbs. soda ash. Work just below boiling point, wring and dry. The shades obtained are very brilliant but not fast.

Pure Blue, Victoria Blue.

Enter the cotton at the boil into a very "short" bath containing, besides the necessary amount of dyestuff, 2 to 4 per cent. alum, or 1 to 2 per cent. aluminium sulphate, work in the cooling bath, wring or hydroextract and dry. The shades produced are not fast but brilliant.

Methylene Blues, Soluble Blues.

Work the cotton for ½ hour in a luke warm bath containing 4 to 5 lbs. of soap per 100 gallons, wring lightly but evenly, then steep in a cold bath containing 2 lbs. stannous chloride per 100 gallons. Rinse, wring and dye in a lukewarm bath for ½ to 1 hour, with the addition of about 1 lb. of alum per 100 gallons of dye-liquor. Wring and dry.

Methyl Cotton Blue.

Very brilliant shades may be dyed with Methyl Cotton Blue by working the bleached yarn for ½ hour at 122° F. in a bath containing 1 lb. alum and ½ lb. tartar emetic, and the necessary amount of dyestuff. After dyeing wring and dry.

Soluble Blues, Methyl Soluble Blue, Methyl Soluble Blue 3S.

See method on p. 272 ("Acid Dyestuffs").

It should be mentioned here that the *Soluble Blues*, including *Cotton Blues, Methyl Blues for cotton, Water Blues, China Blues, Blackley Blues*, etc., are also mentioned along with the "Acid Dyestuffs," because they can be dyed on unmordanted cotton as well as on cotton mordanted with tannic acid and tartar emetic.

The following dyestuffs may be dyed either on a tannic acid mordant or direct: *Direct Grey, Grey and Special Grey* (Poir.).

Dyeing of Cops and Cheeses with the Basic Dyestuffs.

Both the "packing system" and the "perforated skewer system" of machines may be used for mordanting and dyeing cops and cheeses with the basic cotton dyestuffs. After circulating the hot tannin solution for some time the cops are hydroextracted and placed back into the machine. The lukewarm tartar emetic solution is now circulated for some time, and after this the cops are thoroughly rinsed. An addition of a small quantity of Turkey-red oil or Monopole soap to the tannin bath assists the penetration in a very marked degree.

It is also of advantage, in some instances, to soap the cops after mordanting, in order to remove all the loosely held tannin lake. It is not necessary to rinse after the soaping.

Acetic acid or alum should always be added to the dye-bath. The dyeing should be commenced cold, and only a small portion of the dyestuff should be added at the beginning. After the liquor has been allowed to circulate for some time, the temperature may be gradually raised and the remainder of the dyestuff added slowly.

Dyeing of Cotton Warps with the Basic Dyestuffs.

When dyeing very heavy shades the warps should be impregnated with the hot tannin solution in a machine similar to the ordinary warp dyeing machine, and then steeped in the tannin solution overnight. For lighter shades a passage through a 6-box machine will give satisfactory results. The first two boxes are charged with the tannin solution, the next two with the solution of tartar emetic or antimony salt, with the addition of a small quantity of chalk, whilst the last two boxes are used for rinsing in running water.

Soaping after mordanting will also be found of advantage in the case of warps, especially if the yarn is very hard twisted, and if dyestuffs are used which exhaust too quickly. Acetic acid or alum should be added to the dye-bath. The first *end* should be given cold, and only a small portion of the dyestuff solution ought to be added. The dyestuff solution may then be added

continuously whilst the warps are running through the machine. The temperature of the dye-bath should be gradually raised after each end.

Dyeing of Cotton Piecegoods with the Basic Dyestuffs.

Cotton piecegoods may be mordanted with the tannin solution either in the padding machine or in the jigger. Enter the goods hot and allow to run for about 1 hour whilst the bath is cooling. The fixing with a cold or lukewarm solution of tartar emetic may be carried out in the jigger, in the padding machine, or in an open soaper. If two ends are given in the jigger or in the padding machine it is advisable to add one-half of the tartar emetic solution at each end. After fixing rinse well. The dyeing is usually conducted in the jigger. Large jiggers, which enable working with very dilute dyestuff solutions, are best suited for this purpose. The usual addition of either acetic acid or alum having been made to the dye-bath, a small portion of the dyestuff solution is added, and the first end given cold. Another portion of the dyestuff solution is now added, and the pieces are given the second end, cold. After this the dyestuff solution is added in equal portions at each end, and the bath is gradually heated to 150° to 200° F. In some cases it is advisable to give the pieces two ends in the cold dye-bath containing the acetic acid only, before the dyestuff solution is added.

PART IX

SUBSTANTIVE COTTON DYESTUFFS

In the following tables the figures before the name of a dyestuff, *e.g.* (1, 2c, 3, 5), indicate the principal methods of dyeing and after-treatment, whilst the letters after the name, *e.g.*, (Ba.), denote the name of the maker or makers.

Methods of Dyeing and After-treatment.

(1) Direct.

(2) Direct; diazotised and developed with :—

- (a) Phenol (Developer J, Yellow Developer).
- (b) Alpha-naphthol (Maroon Developer).
- (c) Beta-naphthol (Developer A).
- (d) Resorcine (Developer F, Orange Developer).
- (e) Meta-toluylene diamine (Developer H).
- (f) Nerogene D (Be.).
- (g) Oxamine Developer B (Ba.).
- (h) Oxamine Developer M (Ba.).
- (i) Oxamine Developer R (Ba.).
- (j) Soda.
- (k) Amidonaphtholsulphonic acid [Blue Developer AN (Ca.), Developer G].
- (l) Amidodiphenylamine [Fast Blue Developer AD (Ca., H.)].
- (m) Beta-naphtholsulphonic acid (Schaeffer's acid).
- (n) Meta-phenylene diamine.
- (o) Ethyl beta-naphthylamine [Developer B, Claret Developer].
- (p) Bordeaux Developer (ML., Ca.).
- (q) Naphthylamine ether powder (Ca.).
- (r) Naphthylamine ether N powder (Ca.).

(3) Direct; coupled with diazotised paranitraniline [Nitrosamine Red (Ba.), Nitrazol (Ca.), Azophor Red (ML.) etc.].

(4) Direct; developed with bichromate.
(5) Direct; developed with copper sulphate.
(6) Direct; developed with copper sulphate and bichromate.
(7) Direct; soda must not be added to the dyebath.
(8) Direct; treated with formaldehyde.
(9) Direct; treated with Solidogen A.
(10) Direct; developed with chromium fluoride, or chrome alum.
(11) Direct; developed with bleaching powder solution.

YELLOWS AND ORANGES.

(1) Alkali Fast Yellow (Da.).
(1) Alkali Leather Yellow (Da.).
(1) Alkali Oranges (Da.).
(1) Alkali Yellows (Da.).
(1) Aurophenine (ML.).
(1) Azidine Fast Yellow CJ, G (J.).
(1) Azidine Oranges (J.).
(1) Azidine Yellows (J.).
(1) Benzamin Fast Yellow (Da.).
(1) Benzo Fast Orange (By.).
(1) Benzo Fast Yellows (By.).
(1) Benzo Orange (By.).
(1) Boston Direct Yellow (Sch.).
(1) Brilliant Orange (Be.).
(1) Brilliant Pure Yellows (By.).
(1) Buffalo Direct Orange (Sch.).
(1) Buffalo Direct Yellows (Sch.).
(1) Chicago Orange (G.).
(1) Chloramine Orange (By.).
(1) Chloramine Yellow (By., Sa.).
(1) Chlorantine Orange (CI.).
(1) Chlorantine Yellows (CI.).
(1, 2c) Chlorazol Fast Yellows (H.).
(1) Chlorophenine (C.).
(1) Chlorophenine Orange (C.).
(1) Chromine (OSF.).
(1, 3, 5, 6, 10) Chrysamines (Be., By., Leo., Lev., OSF., Sa., W.).
(1) Chrysobarine (W.).
(1, 5) Chrysophenine (Be., By., Ka., Leo., Lev., OSF., Sa.).
(1) Clayton Yellow (C.).
(1) Columbia Orange (Be.).
(1) Columbia Yellow (Be.).
(1) Congo Orange R, G (Be., By., Lev.).
(1, 5) Cotton Orange (Ba.).
(1, 3, 5, 6, 7) Cotton Yellows (Ba., CI.).
(1) Curcumine (Be., Leo.).
(1) Diamine Fast Orange (Ca.).
(1, 3) Diamine Fast Yellow A (Ca.).
(1) Diamine Gold (Ca.).
(1, 3) Diamine Nitrazol Orange (Ca.).
(1, 5, 6) Diamine Oranges (Ca.).
(1, 10) Diamine Yellow N (Ca.).
(1) Dianil Direct Yellow (ML.).
(1, 3, 9) Dianil Orange (ML.).
(1) Dianil Pure Yellow (ML.)
(1, 8) Dianil Yellows (ML.).
(1) Dianol Fast Yellows (Lev.).
(1) Dianol Yellow Y (Lev.).
(1, 2c) Diazo Brilliant Oranges (By.).
(1, 3) Diazogen Orange (J.).
(1) Diphenyl Chlorine Yellow (G.).
(1) Diphenyl Chrysoines (G.).
(1) Diphenyl Citronine (G.).
(1) Diphenyl Fast Yellow (G.).
(1) Diphenyl Oranges (G.).
(1) Diphenyl Phosphine (G.).
(1) Diphenyl Yellow (G.).
(1) Direct Brilliant Orange (Leo.).
(1) Direct Brilliant Yellow (Sch.).
(1) Direct Fast Yellows (Leo., Sch.).
(1) Direct Orange (CI., Poir., Sch.).
(1, 3, 6) Direct Orange (Kanthorine) (CI.).
(1, 6) Direct Yellow CR (CI).
(1) Direct Yellows (Be., By., C., CI., J., Leo., Oe., Poir., Sch.).

(1) Fast Yellow R (Cl.).
(1, 8) Formal Orange (G.).
(1, 8) Formal Yellow (G.).
(1) Hessian Orange (Leo.).
(1) Kresotine Yellows (Oe., ML.).
(1) Mikado Golden Yellow (Be., Leo.).
(1) Mikado Oranges (Be., Leo.).
(1) Mikado Yellows (Be., Leo.).
(1) Mimosa (G.).
(1) Naphthamine Orange R, 2R (Ka.).
(1) Naphthamine Orange TG, TR (Ka., OSF.).
(1) Naphthamine Pure Yellows (Ka.).
(1) Naphthamine Yellows (Ka., OSF.).
(1) New Yellow IV (Sa.).
(1) New Yellow for Cotton (Da.)
(1) Niagara Fast Orange 3R (Sch.).
(1) Nitrophenine (C.).
(1) Orange TA (Be.).
(1) Oriol (G.).
(1) Osfamine Orange (OSF.).
(1, 3, 5, 6) Oxy Diamine Orange (Ca.).
(1) Oxy Diamine Yellows (Ca.).
(1) Oxy Dianil Yellow (ML.).
(1) Oxyphenines (C.).
(1, 3) Para Orange (By.).
(1, 3) Para Yellow (By.).
(1, 3) Paranil Yellow (Be.).
(1) Phenine Yellow (Poir.).
(1) Pluto Orange (By.)
(1, 2a, 2c, 2d, 2j, 2m, 3, 11) Polychromine (G.).
(1) Polyphenyl Orange (G.).
(1) Polyphenyl Yellows (G.).
(1, 2a, 2c, 2d, 2j, 2m, 2n, 2p, 3, 11) Primuline (Be., C., Ca., H., Ka., Leo., ML., Oe., Osf., W.); [Yellow PR superfine (By.); Polychromine (G.); Thiochromogene (Da.)].
(1, 3) Pyramine Orange (Ba.).
(1, 8) Pyramine Yellow (Ba.).
(1) Pyrazol Orange (Sa.).
(1, 3, 4) Renol Orange (W.).
(1) Renol Yellows (W.).
(1) Rosanthrene Orange (Cl.).
(1) Stilbene Orange (C.).
(1) Stilbene Yellows (Ba., C.).
(1, 2a, 2b, 2c, 2d, 2g, 2h, 2i, 2j, 11) Sulphines (Ba.).
(1, 3) Sultan Orange (H.).
(1) Sultan Yellow (H.).
(1) Sun Yellow (G., H., Sa.).
(1, 3) Thiazol Yellows (By., Be., Cl., Sa.).
(1, 2c, 11) Thiochromogene (Da.).
(1) Thioflavine S (Ca.).
(1, 2c) Titan Orange (H.).
(1) Titan Yellow (H.).
(1) Toluylene Fast Orange (By.).
(1, 3, 4, 5, 6) Toluylene Oranges (Be., By., Leo., ML., Oe., Sa.).
(1) Toluylene Yellow (By., Oe.).
(1) Triazol Fast Yellow 2G (Oe.).
(1) Triazol Yellow G (Oe.).
(1) Turmerine (Cl.).
(1) Vesuvine Orange R, 2R (Lev.).
(1) Yellow (By., Ca., Ka.).
(1, 2a, 2c, 2d, 2j, 2m, 2n, 3, 11) Yellow PR, superfine (By.).

REDS.

(1) Acetopurpurine (Be.).
(1) Alkali Clarets (Da.).
(1) Alkali Pinks (Da.).
(1) Alkali Purples (Da.).
(1) Alkali Reds (Da.).
(1) Azidine Bordeaux (J.).
(1) Azidine Brilliant Red (J.).
(1) Azidine Corinth (J.).
(1, 2c) Azidine Fast Red (J.).
(1) Azidine Fast Scarlets (J.).
(1) Azidine Purpurines (J.).
(1) Azidine Reds (J.).
(1) Azidine Red Brown (J.).
(1) Azidine Scarlet (J.).
(1, 10) Benzamine Fast Red (Da.).
(1) Benzamine Maroon (Da.).
(1) Benzo Bordeaux (By.).
(1) Benzo Fast Bordeaux (By.).
(1) Benzo Fast Pink (By.).
(1) Benzo Fast Reds (By.).

1, 6, 10) Benzo Fast Red FC (By.).
1) Benzo Fast Rubine (By.).
1) Benzo Fast Scarlets (By.).
1) Benzo New Red (By.).
1, 3) Benzo Nitrol Bordeaux (By.).
1) Benzopurpurines (Be., By., H., Ka., Leo., Lev., Oe., OSF., Sa., W.); [Cotton Reds (Oe., W.); Sultan (H.); Dianil Reds (ML.); Diamine Red 4B (Ca.)].
(1, 5, 6) Benzo Red 12B (By.).
(1) Benzo Reds (By.).
(1) Benzo Rhoduline Reds (By.).
(1) Benzo Rubine (By.).
(1) Benzo Scarlet (By.).
(1) Blackley Scarlets extra conc. (Lev.).
(1) Bordeaux COV (Be.).
(1) Brilliant Congo (Be., By., Leo., Lev., Sa.).
(1, 9) Brilliant Dianil Red (ML.).
(1) Brilliant Geranines (By.).
(1) Brilliant Purple (Leo.).
(1) Brilliant Purpurine (Be., By., Lev.).
(1) Buffalo Direct Cardinal (Sch.).
(1) Buffalo Direct Crimson (Sch.).
(1) Buffalo Direct Garnet (Sch.).
(1) Buffalo Direct Pink (Sch.).
(1) Buffalo Direct Red 4B (Sch.).
(1) Chicago Red (G.).
(1) Chloramine Reds (By., Sa.).
(1) Chlorantine Pink (CI.).
(1) Chlorantine Red 4B, 8B (CI.).
(1) Chlorazol Fast Red (H.).
(1, 3, 10) Chlorazol Red (H.).
(1) Columbia Bordeaux (Be.).
(1) Columbia Fast Scarlet (Be.).
(1) Congo Corinth G, B (Be., By., Leo., Lev., Sa.); [Cotton Corinth (Ba.); Dianil Bordeaux (ML.)].
(1) Congo Magenta (Sa.).
(1) Congo Reds, Congo 4R (Be., By., Ka., Lev., Sa.).
(1) Congo Rubine (Be., By., Ka., Leo., Lev., OSF.).
(1) Cosmos Red (Ba.).
(1) Cotton Corinth (Ba., Oe.).
(1, 2c) Cotton Fast Reds (Ka.).
(1) Cotton Reds (Ba., Oe., Poir., W.).
(1) Cotton Rubine (Ba.).
(1) Crumpsall Direct Fast Red R, Y (Lev.).
(1) Delta Direct Red 5B (Sch.).
(1, 9) Deltapurpurines (By., Ka., Leo., Lev., ML., OSF., Sa.).
(1, 2c) Diamine Azo Bordeaux (Ca.).
(1, 2c) Diamine Azo Scarlet A, B (Ca.).
(1) Diamine Bordeaux (Ca.).
(1) Diamine Brilliant Bordeaux (Ca.).
(1) Diamine Brilliant Rubine (Ca.).
(1) Diamine Brilliant Scarlet (Ca.).
(1) Diamine Cotton Red A, 3R (Ca.).
(1, 10) Diamine Fast Red (Ca.).
(1) Diamine Fast Scarlets (Ca.).
(1, 3) Diamine Nitrazol Bordeaux (Ca.).
(1, 3) Diamine Nitrazol Scarlet (Ca.).
(1) Diamine Purpurines (Ca.).
(1) Diamine Reds (Be., Ca.).
(1) Diamine Rose (Ca.).
(1) Diamine Rubine (Ca.).
(1) Diamine Scarlets (Ca.).
(1) Diamine Violet Red (Ca.).
(1, 9) Dianil Bordeaux (ML.).
(1, 10) Dianil Fast Red (ML.).
(1) Dianil Fast Scarlets (ML.).
(1) Dianil Garnet (ML.).
(1) Dianil Pink (ML.).
(1, 9) Dianil Ponceau (ML.).
(1, 9) Dianil Reds (ML.).
(1) Dianol Brilliant Reds (Lev.); [Toluylene Red (Oe.); Aceto Purpurine (Be.); Diphenyl Red 8B (G.)].
(1) Dianol Fast Bordeaux (Lev.).
(1) Dianol Fast Clarets (Lev.).
(1) Dianol Fast Reds (Lev.)
(1) Dianol Fast Scarlets (Lev.).
(1) Dianol Scarlets (Lev.).
(1, 2c) Diazo Bordeaux 7B (By.).
(1, 2c) Diazo Brilliant Scarlets (By.).
(1, 2c) Diazo Fast Bordeaux BL (By.).
(1, 2c) Diazo Fast Red 7BL (By.).

(1, 2c) Diazo Geranine B extra (By.).
(1, 2c) Diazo Rubine B (By.).
(1, 2c) Diazogen Bordeaux (J.).
(1, 2c) Diazogen Corinth (J.).
(1, 2c) Diazogen Reds (J.).
(1, 2c) Diazogen Scarlet (J.).
(1) Diphenyl Blue Red (G.).
(1) Diphenyl Fast Bordeaux (G.).
(1) Diphenyl Fast Reds (G.).
(1) Diphenyl Purpurine extra (G.).
(1) Diphenyl Red 8B, extra (G.).
(1) Direct Acid Reds (Da.).
(1) Direct Bordeaux (Leo.).
(1) Direct Brilliant Bordeaux (Leo.).
(1) Direct Brilliant Red 10B (Sch.).
(1, 2c) Direct Fast Acid Reds (Da.).
(1) Direct Pinks (CI.).
(1) Direct Pink new (G.).
(1) Direct Reds (Leo.).
(1) Direct Saffranine (CI.).
(1) Ericas (Be., Leo., Lev., Sa.).
(1, 2c) Fast Cotton Reds (Da.).
(1) Fast Red 8BL (By.).
(1, 8) Formal Red (G.).
(1) Geranines (By.).
(1, 10) Hessian Fast Red (Leo.).
(1, 10) Hessian Fast Rubine (Leo.).
(1) Hessian Purple (By.).
(1) Naphthamine Bordeaux R (OSF.).
(1) Naphthamine Fast Scarlets (Ka.).
(1) Naphthamine Red (Ka.).
(1, 10) Naphthamine Red H (OSF.).
(1) Naphthamine Scarlets (Ka., OSF.).
(1) Niagara Fast Reds (Sch.).
(1) Niagara Fast Scarlet (Sch.).
(1, 5) Oxamine Clarets (Ba.).
(1) Oxamine Fast Claret (Ba.).
(1, 10) Oxamine Fast Red (Ba.).
(1, 8) Oxamine Garnet (Ba.).
(1, 3, 5, 6) Oxamine Red (Ba.).
(1) Oxamine Red 3B (Ba.).
(1, 3) Para Garnet G (By.).
(1, 3) Paranil Bordeaux (Be.).
(1, 3) Para Scarlet G, extra (By.)
(1) Red for Cotton 4B (J.).
(1, 2c) Renolamine Red (W.).
(1) Renol Bordeaux (W.).
(1) Renol Brilliant Red (W.).
(1) Renol Corinth (W.).
(1) Renol Fast Scarlet (W.).
(1, 3) Renol Orange R (W.).
(1) Renol Pinks (W.).
(1) Renol Rosamine (W.).
(1) Renol Rubine (W.).
(1, 2c) Rosanthrene (CI.).
(1, 2c) Rosanthrene Bordeaux (CI.).
(1) Rosazurines (Be., By.).
(1) Rosophenines (C.).
(1) Rosophenine Pink (C.).
(1) Salmon Red (Be.).
(1, 5) Saint-Denis Red (Poir.).
(1) Scarlet for Cotton (J.).
(1, 8) Sultan (H.).
(1, 8) Sultan Scarlet (H.).
(1) Thiazine Reds (Ba.).
(1, 8) Titan Pink (H.).
(1) Toluylene Bordeaux B (Oe.).
(1) Toluylene Red (Oe.).
(1) Triazol Bordeaux B (Oe.).
(1) Triazol Corinth B (Oe.).
(1) Triazol Fast Red C (Oe.).
(1) Triazol Red 10B (Oe.).

Blues and Violets.

(1) Acetylene Blues (CI.).
(1, 5) Acetylene Sky Blue (CI.).
(1) Alkali Azo Blues (Da.).
(1, 2c) Alkali Azo Violets (Da.).
(1, 5) Alkali Azurines (Da.).
(1) Alkali Brilliant Blues (Da.).
(1, 6) Alkali Chrome Blues (Da.).
(1) Azidine Black-Blue (J.).
(1) Azidine Blues (J.).
(1) Azidine Sky-Blue FF (J.).
(1, 2c) Azidine Violet DV (J.).
(1) Azo Blue (Be., By., Lev.).
(1, 2c, 2e) Azo Mauve B, R (Oe.).
(1) Azo Navy Blue B (Oe.).
(1, 5) Azo Violet (Be., By.).
(1) Benzamine Blues (Da.).
(1, 7) Benzamine Pure Blues (Da.).
(1) Benzamine Violet (Da.).
(1, 5, 6) Benzoazurines (Be., By., Cl., Ka., Leo., Lev., Oe., OSF., Sa.); [Oxamine Blues (Ba.)].

(1, 2c) Benzoazurine 3R (By.).
(1) Benzo Black Blue (By.).
(1, 5) Benzo Blues (By.); [Congo Blues (Be.); Diamine Blues (Ca.)].
(1, 6) Benzo Chrome Black-Blue B (By.).
(1, 5, 6) Benzo Copper Blues (By.).
(1, 5) Benzo Cyanines (By.).
(1) Benzo Fast Blue (By.).
(1) Benzo Fast Heliotrope (By.).
(1) Benzo Fast Violets (By.).
(1, 4, 5, 6) Benzo Indigo Blue (By.).
(1) Benzo Navy Blue (By.).
(1) Benzo New Blue (By.).
(1) Benzo Red Blue (By.).
(1, 5) Benzo Sky Blues (By.); [Diamine Sky Blue (Ca.); Congo Sky Blues (Be.)].
(1) Benzo Steel Blue (By.).
(1) Benzo Violets (By.).
(1) Betamin Blue 8B (Oe.).
(1, 5, 6) Brilliantazurines (Be., By.).
(1, 5, 6) Brilliant Benzo Blue 6B (By.); [Diamine Sky Blue FF (Ca.); Chicago Blue 6B (Be.)].
(1, 5) Brilliant Benzo Violets (By.).
(1) Brilliant Congo Blues (Be.).
(1) Brilliant Congo Violet (Be.).
(1) Brilliant Fast Blues (By.).
(1, 7) Brilliant Sky Blues (By.).
(1) Buffalo Direct Blue (Sch.).
(1) Buffalo Direct Violets (Sch.).
(1) Chicago Blue 2R, 4R (Be.).
(1, 3) Chicago Blue B, R (Be., By.).
(1, 5) Chicago Blue B, RW (Be., By.).
(1) Chloramine Blues (Sa.).
(1) Chloramine Sky Blues (Sa.).
(1, 5) Chloramine Violet (By., Sa.).
(1) Chlorantine Lilac (CI.).
(1) Chlorantine Pure Blue (CI.).
(1, 5, 6, 8) Chlorazol Blues (H.).
(1, 5, 6, 8) Chlorazol Brilliant Blues (H.).
(1, 8) Chlorazol Dark Blues (H.).
(1, 3, 8) Chlorazol Dark Navy (H.).
(1, 5, 6, 8) Chlorazol Fast Blue (H.).
(1, 5, 6) Chlorazol Sky Blue (H.).
(1, 3) Chlorazol Violets (H.).
(1) Columbia Blue (Be.).
(1) Columbia Fast Blues (Be.).
(1) Columbia Violets (Be.).
(1, 5) Congo Blue (Be.).
(1) Congo Fast Blues (Be.).
(1) Congo Sky Blue (Be.).
(1, 5) Cotton Blue (CI.).
(1) Cotton Pure Blue (Be.).
(1, 2c, 2r) Diamine Azo Blues (Ca.).
(1, 3, 5, 6) Diamine Bengal Blue (Ca.).
(1, 2b, 2c, 5, 6) Diamine Blues (Ca.).
(1, 3) Diamine Blue NC (Ca.).
(1, 2b, 2c, 2d, 2k, 2l, 2m) Diamine Blue 2B, 3B, BH (Ca.).
(1, 5, 6) Diamine Brilliant Blue (Ca.).
(1) Diamine Brilliant Violet (Ca.).
(1) Diamine Cyanine (Ca.).
(1, 2c, 4, 5, 6, 10) Diamine Dark Blue (Ca.).
(1, 5, 6) Diamine Deep Blue (Ca.).
(1, 5) Diamine Fast Blue (Ca.).
(1) Diamine Fast Brilliant Blue R. Pat. (Ca.).
(1) Diamine Fast Violets (Ca.).
(1, 2c) Diamine Heliotrope (Ca.).
(1, 5, 6) Diamine New Blue (Ca.).
(1) Diamine Pure Blues (Ca.).
(1, 5) Diamine Sky Blues (Ca.).
(1, 5, 6) Diamine Sky Blue FF (Ca.).
(1) Diamine Steel Blue (Ca.).
(1) Diamine Violets (Ca.).
(1, 2c, 3, 5, 6, 7, 10) Diamineral Blue (Ca.).
(1, 2c, 5) Diaminogene Blue BB, G, NA, NB, 6RN, (Ca.).
(1, 2c, 5) Diaminogene Dark Blue, (Ca.).
(1, 2c, 5) Diaminogene Sky Blue N, (Ca.).
(1, 5) Dianil Azurine (ML.).
(1, 5) Dianil Blue BX (ML.).
(1, 9) Dianil Blues (ML.).
(1, 9) Dianil Dark Blues (ML.).
(1, 5, 9) Dianil Indigo (ML.).
(1) Dianil Violet (ML.).

(1) Dianol Blue 3B, 2B, BX, 4R, G. (Lev.).
(1, 2c, 2n) Dianol Blue BH (Lev.).
(1, 4, 5, 6) Dianol Blue RW (Lev.).
(1, 4, 5, 6) Dianol Brilliant Blues (Lev.).
(1) Dianol Brilliant Violet 2R (Lev.).
(1) Dianol Dark Blue N (Lev.).
(1) Dianol Fast Blues (Lev.).
(1) Dianol Sky Blues (Lev.).
(1, 2c, 2n) Dianol Steel Blue (Lev.).
(1) Dianol Violet N, 2B, R (Lev.).
(1, 2c, 2k, 5) Diazo Black BHN (By.).
(1, 2c, 5) Diazo Blue 3R (By.).
(1, 2c) Diazo Blue-Black (By.).
(1, 2c, 5) Diazo Fast Black B, 3B (By.).
(1, 2c) Diazo Fast Violet BL, 3RL, (By.).
(1, 2c, 5) Diazo Indigo Blues (By.).
(1, 2c, 2e) Diazo Navy Blue B, G, R (Oe.).
(1, 2c, 5) Diazo Navy Blue, 3B (By.).
(1, 2c) Diazo Red Blue 3R (By.).
(1, 2c) Diazo Sky Blues (By.).
(1, 2c) Diazogen Violet 5R (J.).
(1, 7) Diphenyl Blues (G.).
(1) Diphenyl Blue-Black (G.).
(1) Diphenyl Brilliant Blue (G.).
(1) Diphenyl Fast Blues (G.).
(1) Diphenyl Fast Violets (G.).
(1) Diphenyl Violets (G.).
(1) Direct Blues (CI., Poir.).
(1, 5) Direct Blues (Leo.).
(1) Direct Dark Blue (Leo.).
(1) Direct Fast Blue (Leo.).
(1, 2c, 2e) Direct Indigo Blues (CI.).
(1, 2c, 2e) Direct Indone Blue (Sa.).
(1, 5) Direct Sky Blue (CI.).
(1) Direct Violets (CI., Poir.).
(1) Eboli Blues (Leo.).
(1) Eboli Dark Blues (Leo.).
(1) Eboli Sky Blues (Leo.).
(1) Erie Blue (Be.).
(1, 8) Formal Blues (G.).
(1) Heliotrope (Be., By., Lev.).
(1, 2c) Indigene Blues (CI.).
(1) Isamine Blues (Ca.).
(1, 2c, 2e) Melanthrenine BH, BO, RO, HW, JH, (CI.).
(1, 2c, 2e) Melogene Blue (Sa.).
(1) Naphthamine Blues (Ka., OSF.).
(1, 2c, 2e, 3) Naphthamine Blue BE., GE, 3RE (Ka., OSF.).
(1) Naphthamine Brilliant Blues (Ka.).
(1) Naphthamine Sky Blue (OSF.).
(1) Naphthamine Violets (Ka., OSF.).
(1) Naphthazurine B, BB (Oe.).
(1, 2c) Naphthogene Blues (Be.).
(1) Niagara Blues (Sch.).
(1, 5) Niagara Blue 6B (Sch.).
(1) Niagara Fast Blues (Sch.).
(1) Opaline (CI.).
(1) Osfamine Blues (OSF.).
(1) Osfamine Violets (OSF.).
(1) Osfanil Blues (OSF.).
(1, 5) Osfanil Pure Blue (OSF.).
(1) Osfanil Violet RB, CO (OSF.).
(1) Oxamine Black BHN (Ba.).
(1, 5) Oxamine Blues (Ba.).
(1, 2i, 3, 5, 6) Oxamine Blue BG (Ba.).
(1, 2c, 2g, 2i) Oxamine Blue 3R, 4R, B, G (Ba.).
(1, 5) Oxamine Copper Blue (Ba.).
(1, 5) Oxamine Dark Blues (Ba.).
(1) Oxamine Pure Blues (Be.).
(1, 2c, 2g, 2i, 5) Oxamine Violet (Ba.).
(1) Oxy Chlorazol Blues (H.).
(1, 5, 6) Oxy Diamine Blues (Ca.).
(1) Oxy Diamine Violets (Ca.).
(1) Oxyphenol Sky Blue (C.).
(1, 3) Para Blues (By.).
(1) Paramine Blues (Cl.).
(1, 2c, 2d, 2k, 2l, 2n) Paramine Navy Blue (Cl.).
(1, 5, 6) Paramine Sky Blues (Cl.).
(1) Paramine Violet (Cl.).
(1, 5) Phenamine Blue (Ba.).
(1) Renol Blue 3 BX (W.).
(1, 2c, 5, 6) Renol Blue B (W.).
(1, 5, 6) Renol Blue 3B, BX (W.).
(1, 5, 6) Renol Fast Blue (W.).

(1) Renol Indigo Blue (W.).
(1, 5, 6) Renol Light Blue (W.).
(1, 5, 6) Renol Pure Blue (W.).
(1, 2c) Renol Violet (W.).
(1, 2c) Rosanthrene Violet 5R (CI.).
(1) Saint-Denis Blue (Poir.).
(1) Saint-Denis Violet (Poir.).
(1) Solamine Blues (Be.).
(1) Titan Como (H.)
(1, 8) Titan Dark Navy (H.).
(1) Titan Fast Navy (H.).
(1, 8) Titan Navy (H.).
(1, 2c, 2e) Toluylene Dark Blues (Oe.).
(1) Triazol Blues (Oe.).
(1, 2c, 2e) Triazol Dark Blues (Oe.).
(1) Triazol Indigo Blue (Oe.).
(1) Triazol Pure Blue R (Oe.).
(1) Triazol Violets (Oe.).
(1) Trisulfon Blue (Sa.).
(1) Trisulfon Violet (Sa.).
(1) Union Navy Blue (Lev.).
(1, 2c.) Zambesi Indigo (Be.).
(1, 2c) Zambesi Pure Blue (Be.).

GREENS.

(1, 7) Alkali Greens (Da.).
(1, 7) Alkali Black Green (Da.).
(1) Azidine Black Green (J.).
(1) Azidine Dark Green (J.).
(1, 2c) Azidine Green 2G, 2B (J.).
(1, 10) Benzo Dark Greens (By.).
(1, 10) Benzo Greens (By.).
(1, 6, 8) Benzo Olive (By.).
(1, 10) Brilliant Benzo Green (By.).
(1) Chloramine Dark Green (Sa.).
(1) Chloramine Green (Sa.).
(1, 3, 10) Chlorazol Green (H.).
(1) Columbia Black Green (Be.).
(1) Columbia Green (Be.).
(1) Diamine Dark Green (Ca.).
(1, 7, 10) Diamine Green (Ca.).
(1, 3) Diamine Nitrazol Green G, S (Ca.).
(1) Dianil Dark Green (ML.).
(1) Dianil Greens (ML.).
(1, 4, 5, 6) Dianol Chrome Green (Lev.).
(1, 3) Dianol Coupling Greens (Lev.).
(1) Dianol Dark Greens (Lev.).
(1, 4, 5, 6) Dianol Fast Greens (Lev.).
(1) Dianol Greens (Lev.).
(1) Dianol Olive (Lev.).
(1) Dianol Pea Greens (Lev.).
(1, 2c) Diazo Olive G (By.).
(1, 7) Diphenyl Greens (G.).
(1) Direct Brilliant Green (Sa.).
(1) Direct Dark Green S (CI.).
(1, 10) Direct Dark Green (Leo.).
(1, 10) Direct Green B, J, JO (CI.).
(1, 10) Direct Green (Leo.).
(1) Erie Direct Greens (Sch.).
(1, 8) Formal Olive (G.).
(1) Naphthamine Dark Greens (OSF.).
(1, 2c, 2e, 10) Naphthamine Greens (Ka., OSF.).
(1) Osfanil Dark Green B. (OSF.).
(1) Osfamine Dark Green (OSF.).
(1, 5) Oxamine Dark Greens (Ba.).
(1, 5, 7) Oxamine Greens (Ba.).
(1, 5) Oxamine Pure Green G (Ba.).
(1, 3) Para Fast Green (By.).
(1, 3) Para Green (By.).
(1, 3) Para Olive G (By.).
(1) Paramine Green (Cl.).
(1, 7) Polyphenyl Greens (G.).
(1, 3) Renolazine Green (W.).
(1, 4) Renol Dark Green (W.).
(1) Renol Greens (W.).
(1) Renol Olive (W.).
(1, 10) Triazol Green B, G (Oe.).
(1) Union Green (Poir.).

BROWNS.

(1) Alkali Bronze (Da.).
(1, 6) Alkali Chrome Brown (Da.).
(1) Alkali Cutch (Da.).
(1) Alkali Mode Brown (Da.).
(1) Alkali New Brown (Da.).
(1) Azidine Bronze (J.).
(1) Azidine Browns (J.)
(1) Azidine Dark Brown (J.).
(1, 3, 6) Benzamine Browns (Da.).
(1, 2c, 2e) Benzamine Brown M. 768 (Da.).

(1) Benzamine Dark Brown (Da.).
(1) Benzo Bronze (By.).
(1) Benzo Brown 5R (By.); [Alkali New Brown (Da.); Cotton Brown (Ba.)].
(1, 2c, 2e) Benzo Brown B, BR, MC, NB, R extra, RC (By.).
(1, 3) Benzo Brown G, R extra (By.).
(1, 5, 6, 8, 10) Benzo Brown MC, 3GC (By.).
(1, 6) Benzo Chrome Browns (By.).
(1) Benzo Dark Browns (By.).
(1, 3) Benzo Nitrol Brown G, 2R (By.).
(1, 5, 6) Catechu Browns (Be., Sa.).
(1) Chloramine Browns (By.).
(1) Chlorantine Browns (CI.).
(1, 2n, 3, 5, 6, 10) Chlorazol Browns (H.).
(1, 5, 6) Chlorazol Catechine (H.).
(1, 5, 6) Chlorazol Deep Brown (H.).
(1, 6) Chromanil Brown (Be.).
(1, 2e) Columbia Brown (Be.).
(1, 3, 5, 6) Congo Browns (Be.).
(1, 5) Copper Brown (Ba.).
(1) Cotton Browns (Ba.).
(1, 2a, 2c, 2j, 2k, 2l, 2n, 3) Cotton Brown AN. (Ca.).
(1) Cotton Dark Browns (Ca.).
(1, 2c, 2n) Crumpsall Direct Fast Brown B (Lev.).
(1) Crumpsall Direct Fast Brown O, M (Lev.).
(1) Crumpsall Direct Fast Khaki (Lev.).
(1, 2e, 6) Cupranil Browns (CI.).
(1, 3, 10) Diamine Bronze (Ca.).
(1, 8) Diamine Browns (Ca.).
(1, 2a, 2c, 2j, 2l) Diamine Brown M, S, V (Ca.).
(1, 3, 8) Diamine Brown MR, V, S (Ca.).
(1, 4, 10) Diamine Brown B, M, R, S (Ca.).
(1, 5, 6) Diamine Brown M, B, 3G (Ca.).
(1, 4, 5, 6, 10) Diamine Catechines (Ca.).
(1, 2a, 2e, 2j, 2k, 2l, 2n) Diamine Cutch (Ca.).
(1, 8) Diamine Fast Browns (Ca.).
(1, 3) Diamine Nitrazol Brown (Ca.).
(1) Diamineral Browns (Ca.).
(1, 4) Diamineral Brown G (Ca.).
(1, 5, 6) Diamineral Brown 3GN (Ca.).
(1, 3, 6) Dianil Brown 3GO, 2G (ML.).
(1, 2c, 2n, 6) Dianil Brown MH (ML.).
(1, 3) Dianil Brown 5G, B, D, R, M (ML.).
(1, 4, 5, 6) Dianil Chrome Brown (ML.).
(1, 5) Dianil Fast Brown (ML.).
(1, 5, 6) Dianil Japonine (ML.).
(1) Dianol Bronze (Lev.).
(1) Dianol Browns (Lev.).
(1, 4, 5, 6) Dianol Brown LF (Lev.).
(1) Dianol Catechine G, B (Lev.).
(1) Dianol Cotton Brown, A new (Lev.).
(1, 4, 5, 6) Dianol Union Browns (Lev.).
(1, 2j) Diazo Brilliant Black B (By.).
(1, 2j, 6) Diazo Brown R. extra (By.).
(1, 2c, 2e, 3) Diazo Brown G, R extra (By.).
(1, 2c, 2e) Diazogen Brown D. (J.).
(1) Diphenyl Bronze (G.).
(1) Diphenyl Browns (G.)
(1) Diphenyl Catechine (G.).
(1) Diphenyl Fast Brown (G.).
(1) Diphenyl Red Brown (G.).
(1, 2e, 6) Direct Brown M (CI.).
(1) Direct Browns (Leo.).
(1, 2b, 2c, 2d, 2e) Direct Brown (G.).
(1, 3, 6, 10) Direct Yellowish Brown (Leo.).
(1, 2c, 2e, 5, 6, 10) Direct Dark Brown (Leo.).
(1, 6) Direct Dark Brown (Sch.).
(1, 2c, 2e, 3) Direct Fast Brown B (By.).
(1, 5, 6) Direct Naphthamine Browns (OSF.).

(1) Discharge Browns (CI.).
(1, 5) Erie Direct Brown GR (Sch.).
(1, 6) Erie Direct Brown GB, 3RB, (Sch.).
(1, 8) Formal Brown (G.).
(1, 6) Havanna Brown B. (Sch.).
(1, 5) Hessian Brown (Leo.).
(1) Mikado Browns (Leo.).
(1) Naphthamine Bronze (OSF.).
(1) Naphthamine Browns (Ka.).
(1, 2c, 2e, 5) Naphthamine Browns (Ka., OSF.).
(1, 2c, 2e, 3) Naphthamine Brown H (Ka.).
(1) New Toluylene Browns (Oe.).
(1, 3) Nitramine Brown (Ba.).
(1, 3) Nitranil Browns (CI.).
(1) Oxamine Browns (Ba.).
(1, 2c, 2h, 3, 6, 8) Oxamine Brown B, R (Ba.).
(1) Oxamine Dark Brown (Ba.).
(1, 3, 5) Oxamine Maroon (Ba.).
(1, 3, 6) Oxy Diamine Browns (Ca.).
(1) Oxyphenol Browns (C.).
(1, 6) Panama Brown 3R (Sch.).
(1, 3) Para Bronze NB (By.).
(1, 3) Para Brown R, SC (By.).
(1, 6) Paramine Brown (Cl.).
(1, 6) Paramine Dark Brown (Cl.).
(1, 3) Paranil Browns (Be.).
(1) Pegu Browns (Leo.).
(1, 8) Pluto Browns (By.).
(1, 3) Pluto Brown GG, NB, R (By.).
(1) Renol Bronze (W.).
(1) Renol Brown BB, BG (W.).
(1, 3, 4, 8) Renol Brown R (W.).
(1, 2c, 2e, 5, 6) Renol Brown MB (W.).
(1, 4, 5, 6) Renol Brown RG (W.).
(1, 3) Renol Brown PR (W.).
(1) Renol Dark Brown (W.).
(1) Renol Deep Browns (W.).
(1, 4) Renol Deep Brown D (W.).
(1) Renol Havanna (W.).
(1) Renol Khaki (W.).
(1) Renol Maroon (W.).
(1, 5) Thiazine Browns (Ba.).
(1, 3, 6, 10) Toluylene Browns (By.).
(1, 2c, 2e, 3) Toluylene Brown G (Oe.).
(1) Triazol Browns (Oe.).
(1) Trisulfon Bronze (Sa.).
(1) Trisulfon Browns (Sa.).
(1) Union Brown (Poir.).
(1, 2e) Zambesi Browns (Be.).

BLACKS.

(1, 8) Alkali Blacks (Da.).
(1, 8) Alkali Black FF extra (Da.).
(1, 2c, 2e) Alkali Blue Black (Da.).
(1, 6) Alkali Chrome Black (Da.).
(1) Alkali Deep Black (Da.).
(1) Azidine Blacks (J.).
(1, 2c) Azidine Black BHN (J.).
(1) Azidine Carbon (J.).
(1, 2c) Azidine Direct Blacks (J.).
(1, 4, 6) Benzo Chrome Blacks (By.).
(1, 4, 6) Benzo Chrome Black Blue B (By.)
(1) Benzo Fast Blacks (By.).
(1, 2c, 2e) Benzo Fast Black L (By.).
(1, 3) Benzo Nitrol Black B, T (By.).
(1, 3, 4, 8) Carbide Blacks (CI.).
(1) Carbon Blacks (Ka.).
(1) Chloramine Blacks (Sa.).
(1, 8) Chlorazol Fast Blacks (H.).
(1, 6) Chromanil Blacks (Be.).
(1) Columbia Blacks (Be.).
(1, 3, 9) Columbia Fast Blacks (Be.).
(1, 2c, 2h, 8) Cotton Black RW extra; E extra (Ba.).
(1, 3, 5) Cotton Black R, E extra, RW extra, PF extra, BGN (Ba.).
(1) Cotton Milling Black (Ba.).
(1, 2c, 2e) Diamine Azo Black B, R (Ca.).
(1, 2c, 2e) Diamine Beta Black B, BB, BGH (Ca.).
(1, 2c, 2d, 2k, 2l, 2n, 2r) Diamine Black BH (Ca.).
(1, 2c, 2d, 2j, 2k, 2l, 2n) Diamine Black BHN, BHR, BHS, BO, RO, ROO (Ca.).
(1, 2c, 2n) Diamine Blacks (Ca.).

(1, 2c, 2j, 2d, 2k, 2l, 2n, 2r) Diamine Blue Black E (Ca.).
(1, 5, 6) Diamine Fast Black F (Ca.).
(1, 4, 8) Diamine Fast Black X (Ca.).
(1) Diamine Fast Grey RN (Ca.).
(1, 3) Diamine Grey G (Ca.).
(1, 2c, 2k, 2l, 2n) Diamine Jet Black SS (Ca.).
(1) Diamine Milling Blacks (Ca.).
(1, 3) Diamine Nitrazol Black B (Ca.).
(1, 5, 6) Diamineral Black B, 3B, 6B (Ca.).
(1, 2c, 2d, 2k, 2l, 2n) Diaminogenes (Ca.).
(1, 2c, 2n) Dianil Black ES (ML.).
(1, 9) Dianil Black G (ML.).
(1, 3, 6, 9) Dianil Black CR (ML.).
(1, 3, 9) Dianil Black R (ML.).
(1, 6, 9) Dianil Black CB (ML.).
(1, 4) Dianil Black T (ML.).
(1, 3, 5) Dianil Black N, PR (ML.).
(1, 3, 4, 8) Dianol Black E extra (Lev.).
(1) Dianol Black D, FFE, F conc. (Lev.).
(1, 3) Dianol Black JW, RW, RX, FFX (Lev.).
(1) Dianol Brilliant Blacks (Lev.).
(1, 4, 5, 6) Dianol Chrome Blue-Black (Lev.).
(1, 4, 5, 6) Dianol Copper Black (Lev.).
(1, 2c, 2n) Dianol Diazo Blacks (Lev.).
(1) Dianol Fast Blacks (Lev.).
(1) Dianol Grey GX (Lev.).
(1) Dianol Jet Blacks (Lev.).
(1) Dianol Union Black 5BV (Lev.).
(1, 2c, 2n) Diazine Black H extra (Sch.).
(1, 2c, 2e) Diazo Black R (By., Leo.).
(1, 2c, 2e, 2o) Diazo Brilliant Black B (By.).
(1, 2d, 2e) Diazo Fast Black B. extra, MG, G, 3B (By.).
(1, 2c+d, 2c+e, 2e, 8) Diazo Fast Black BHX, SD (By.).
(1, 2c, 2n) Diazogen Black DR (J.).
(1) Diphenyl Fast Black (G.).
(1) Diphenyl Fast Grey (G.).
(1, 2c, 2e, 2h) Direct Black BH (Leo.).
(1, 2c, 2e) Direct Black V, BH, RO (Sa.).
(1, 2c, 2e) Direct Blacks (Poir.).
(1, 4, 5, 6, 8) Direct Black FF extra (Leo.).
(1, 3, 4) Direct Blue Black B (By.).
(1, 8) Direct Blue Black (Leo.).
(1, 4, 5, 6) Direct Chrome Black (Leo.).
(1, 2c, 2e, 3, 4, 6, 8) Direct Deep Blacks (By.).
(1) Direct Grey (Sa.).
(1, 8) Direct Naphthamine Blacks (OSF.).
(1) Erie Direct Blacks (Sch.).
(1, 8) Formal Blacks (G.).
(1) Grounding Black for Cotton (Ba.).
(1) Hessian Fast Black (Leo.).
(1, 2e, 2c, 2d) Indigene Blacks (CI.).
(1, 2c, 2d, 2l, 2n, 8) Ingrain Blacks (H.).
(1) Naphthamine Black H (KA.).
(1, 2c, 2e) Naphthamine Blacks (OSF.).
(1, 2c, 2e, 3) Naphthamine Black BE. CE, CET, BVE (Ka.).
(1) Naphthamine Deep Black HW (Ka.).
(1) Naphthamine Direct Blacks (Ka.).
(1, 2c, 2e, 3) Naphthamine Fast Blacks (Ka., OSF.).
(1, 2c, 2d, 2e) Neropaline BZ, TZ, (CI.).
(1) Neutral Grey (Be., Da.).
(1, 2c, 2n) Niagara Fast Black M, 3B extra (Sch.).
(1) Nyanza Black (Be.).
(1, 2c, 2e) Osfamine Black (OSF.).
(1, 2c, 2e, 3) Osfanil Blacks (OSF.).
(1, 2c, 2h, 2i, 8) Oxamine Blacks (Ba.).

(1) Oxy Diamine Blacks (Ca.).
(1, 3) Oxy Diamine Black A, AM, D, JB, JE, JEI, JW, JWF, JWR, UI, SA, RR (Ca.).
(1, 3, 8) Oxy Diamine Carbon JE, JEI (Ca.).
(1, 2c, 2d, 2n, 5) Oxy Diaminogenes (Ca.).
(1) Polyphenyl Black R conc. (G.).
(1, 4, 5, 6, 8) Pluto Blacks (By.).
(1) Panama Black R extra (Sch.).
(1, 3, 8) Para Diamine Blacks (Ca.).
(1) Paramine Blacks (Cl.).
(1, 3) Paranil Black (Be.).
(1) Patent Dianil Blacks (ML.).
(1, 2c, 2e) Renolamine Blacks (W.).
(1) Renol Blacks (W.).
(1, 3, 8) Renol Black R, GR, G, 2G (W.).
(1, 2c, 3, 8) Renol Black SF (W.).
(1) Renol Deep Black (W.).
(1, 8) Titan Blacks (H.).
(1, 2c, 2d, 2n, 3) Titan Fast Blacks (H.).
(1, 2c, 2e, 3) Triazol Blacks (Oe.).
(1) Toluylene Black G, B (Oe.).
(1) Violet Black (Ba.).
(1, 2c, 2e) Zambesi Black R, F, (Be.).
(1, 2a, 2c, 2d, 2e) Zambesi Black BR. (Be.).
(1, 2c) Zambesi Black NA (Be.).
(1, 2e) Zambesi Black 2G (Be.).
(1, 2c, 2e, 2f) Zambesi Black V, NA, 2G (Be.).

Dyeing of Cotton with the Substantive Cotton Dyestuffs.

Method (1).

Light shades have to be dyed on bleached cotton, whilst dark and heavy shades may be dyed on the unbleached material. In the latter case it is advisable to boil the cotton with soda ash or with water only, before dyeing.

Turkey-red oil, Monopole soap, or Marseilles soap are frequently added to the dye-bath for the purpose of more readily wetting out the cotton.

The dyestuffs should be dissolved in soft water, or, better still, in condensed water. Hard water should be boiled up with some soda before the dyestuff is added. The practice of adding the dyestuff direct to the bath is not to be recommended. If it is done, however, the soda should be added first, then the dyestuff, and finally the salt or Glauber's salt.

All the substantive dyestuffs, with the exception of those marked (7) may be dyed from an alkaline bath.

Neutral salts, such as common salt and Glauber's salt, are added for the purpose of accelerating the dyeing, whilst an addition of soda, soap, Turkey-red oil, sodium phosphate, acts retarding, and consequently tends to assist in producing more level dyeings.

The cotton is usually dyed at the boil for $\frac{3}{4}$ to 1 hour. Light shades may be dyed at a lower temperature, about 120° to

140° F. The fastest shades are, however, obtained when the dyeing is conducted at the boil.

When dyeing very heavy shades it is advisable to dye for about ¾ hour at the boil, and to allow to "feed" for about ½ hour, or longer, in the cooling bath.

When using common salt which contains appreciable quantities of calcium or magnesium salts, it is advisable, when dissolving the salt, especially in the dyeing of cops and cheeses, to add the necessary amount of soda, to allow the precipitate to settle and to add the clear solution to the dye-bath.

The concentration of the dye-bath is in most cases of importance as regards exhaustion of the dyestuff. As a rule the "shorter" the bath, the deeper the shade obtained with the same amount of dyestuff. It has, however, been found that, in some instances, especially when dyeing the direct cotton blacks in the jigger, the bath will be better exhausted, if a larger volume of liquor is used. For light shades it is advisable to use a very dilute dye-bath.

When dyeing heavy shades the dye vessel should be provided with a closed steam-coil.

The amount of salt or Glauber's salt added to the dye-bath varies very considerably, but if the bath is to be used continuously, the greatest care has to be taken to adjust the addition in such a manner that the dyestuff is not precipitated (salted out).

This is particularly of importance in the dyeing of cops and cheeses. It will often be found better to add a much larger quantity of dyestuff to the first bath and to add a very small amount of salt or Glauber's salt. For the dyeing of subsequent lots the amount of salt, etc., contained in the dyestuff added is frequently sufficient to make any further addition of salt, etc., unnecessary. When working in this manner, the baths may be used for months without the danger of precipitated dyestuff becoming settled on the cops.

Salt should not be added when dyeing light and delicate shades. The addition of 1 to 2 per cent. of soap or Turkey-red oil, and 3 to 10 per cent. of sodium phosphate, will give the best results. Monopole soap is now frequently employed in place of Marseilles soap.

If a more strongly alkaline bath is required 1 to 2 per cent. of soda ash may be added.

5 to 10 per cent. of Glauber's salt may be added in place of the sodium phosphate, but the results are not as satisfactory as those obtained with the latter.

Medium shades should be dyed with the addition of 2 per cent. soda ash and 10 per cent. calcined Glauber's salt, or the corresponding amount of crystallised Glauber's salt.

For heavy shades, 2 to 5 per cent. soda ash and 20 to 30 per cent. of calcined Glauber's salt, or 30 to 45 per cent. of common salt should be added. *Benzo Indigo Blue* and *Benzo Copper Blue B* and *2B* are best dyed with 10 per cent. soda ash without the addition of either salt or Glauber's salt.

The *Brilliant Sky Blues* should be dyed without soda, but with the addition of the necessary amount of Glauber's salt and 1 to 2 per cent. of acetic acid.

In order to check the amount of salt present in the dye-bath, the specific gravity ought to be ascertained from time to time. When dyeing light shades it should not exceed 2° Tw., whilst for dark shades it must not be more than 4½° to 6° Tw., at 60° F.

Some of the substantive cotton dyestuffs, such as *Cotton Red S*, *Rosophenine*, *Saint-Denis Red*, have to be dyed from a strongly alkaline bath.

For 100 *lbs. of cotton yarn :* The necessary quantity of *Cotton Red S* is mixed with about twice its weight of caustic soda (76° Tw.). A little hot water is added so as to make the whole into a uniform paste, which is then poured into the boiling bath, with the addition of about 140 lbs. of common salt.

A "short" bath should be used (about 1 : 15) and the yarn should be worked for ¾ to 1 hour at the boil. Wring and rinse slightly.

For subsequent dyeings, ⅔ to ¾ of the dyestuff used in the first bath and a quantity of common salt, corresponding to that which has been removed by taking out the cotton, should be added.

Somewhat brighter shades are obtained by souring, after dyeing, with 6 to 10 lbs. of sulphuric acid 168° Tw., per 200 to 220 gallons of water.

Method (a) of dyeing Saint-Denis Red.—For 100 lbs. cotton:—Dissolve 2 lbs. 13 ozs. of the dyestuff, in 4½ pints caustic soda lye, 77° Tw., and 2 gallons water. Heat until completely dissolved, then add 6¼ gallons water. The solution is added to the dye-bath, which is prepared as follows :—207 gallons water, 520 lbs.

common salt, 31 lbs. soda ash. A wooden vessel, provided with a closed copper steam-coil, should be used. Enter the cotton at 75° to 85° F., raise the temperature to boiling point in not less than 20 minutes, and dye 30 to 45 minutes at the boil. After dyeing, wring and pass through a 1 per cent. solution of sulphuric acid, rinse and dry.

For further lots of cotton take the same quantity of dyestuff and make up the bath to the original volume with a solution of salt and soda in the proportions given above.

Method (*b*).—For 100 lbs. cotton:—Dissolve 2 lbs. 13 ozs. Saint-Denis Red in 9 gallons caustic soda lye (10·5° Tw.), add this to the dye-bath consisting of 180 gallons of a solution of rock salt (32·5° Tw.), and 5 gallons caustic soda lye (77° Tw.). Heat the bath to 185° F., enter the cotton, raise the temperature to 200° F., and work at this temperature for 30 minutes. After dyeing, pass the cotton, without rinsing, through a 1 per cent. solution of sulphuric or hydrochloric acid; finally rinse well and dry. For each subsequent dyeing the same quantity of dyestuff and of caustic soda lye has to be added. Sufficient common salt should be added after every dyeing operation in order to keep the strength of the liquor at a specific gravity of 23·5° Tw., at a temperature of 185° to 190° F.

The fastness to light of Saint-Denis Red dyed by one of the two methods may be considerably improved if the dyed material is after-treated for 15 minutes in a solution of copper sulphate or cupric chloride.

Method (*c*).—The dye-bath is charged with 100 gallons water, 2 lbs. of quicklime made into a uniform paste with water and added through a sieve, 75 lbs. of common salt and the necessary amount of dyestuff dissolved with $\frac{1}{5}$ its weight of caustic soda. Dye at the boil.

Dyeing of Loose Cotton.

The substantive cotton dyestuffs may be dyed on loose cotton in an open dye-vessel, but an apparatus, such as the "Obermaier," in which the cotton is tightly packed, is more economical, and, keeps the material in a better condition for spinning.

When dyeing in an open vessel, heat the dye-bath to the boil open out the dry cotton well, enter, and work for $\frac{3}{4}$ to 1 hour near boiling point. A "short" bath should be used, and deeper

shades are obtained if the cotton is allowed to "feed" for some time in the cooling bath. Allow the cotton to cool after lifting it out of the dye-liquor and before rinsing. In many instances the cotton does not require rinsing, but is hydroextracted immediately after it has cooled.

For heavy shades the dye-bath should contain 2 to 3 lbs. soda ash and 20 to 35 lbs. Glauber's salt. The addition of 1 lb. of Turkey-red oil or Monopole soap per 100 gallons of dye liquor materially assists in producing level dyeings.

When dyeing in a machine it is essential to select dyestuffs which are readily and completely soluble and which do not exhaust too rapidly. The cotton should be tightly and very evenly packed, and the quantities of salt or Glauber's salt added should not be too high. It is better, in many cases, to dye for some time with the dyestuff and the soda only without the addition of salt, and to add the salt at a later stage.

Difficulties will always be met with if hard water has to be used, even if the necessary amount of soda has been added to correct it.

Turkey-red oil may be added to the dye-bath in order to assist in the wetting out of the cotton.

It is usual to dye at the boil for ¾ to 1 hour and, if necessary, to rinse in the machine.

Dyeing of Sliver.

Sliver is usually dyed in machines belonging to the "packing system." The method of working and the additions to the dye-bath are the same as given for the dyeing of loose cotton.

Dyeing of Cotton Yarn.

Cotton yarn is chiefly dyed in the ordinary dye-beck, although dyeing machines, such as the "Klauder-Weldon" and machines in which the hanks are tightly packed, such as the "Obermaier" and the "Pornitz" are frequently used. For light and delicate shades the yarn is bleached, whilst for dark shades it is boiled or wetted out with Turkey-red oil, before dyeing.

When dyeing in machines, which is more economical than dyeing in the beck, boiling out can be dispensed with. The yarn must be tightly and evenly packed in order to prevent the dye-liquor from forming channels which might cause uneven shades.

The additions to the dye-bath are given in the general part which deals with the dyeing of the substantive dyestuffs.

Dyeing of Mercerised Cotton Yarn.

Mercerised yarn exhibits a greater affinity for the direct dyestuffs; they are taken up more rapidly, and it is, therefore, necessary to add less salt or Glauber's salt to the dye-bath than in dyeing unmercerised cotton, and to commence the dyeing cold. It is better to dye with the addition of soda or soda and Turkey-red oil, or Monopole soap, for some time, and to add the Glauber's salt later. For light shades sodium phosphate should be used in place of Glauber's salt.

Dyeing of Cops and Cheeses.

Cops and cheeses may be dyed with the substantive dyestuffs in any one of the machines described in "Part XVI." Cheeses are much more readily penetrated than cops. The greatest care must be taken in order to prevent precipitation of the dyestuff. This is especially of importance when dyeing in machines belonging to the "packing system," because the precipitate will be deposited partly on the cloth which surrounds the cops and partly on the uppermost layer of cops, which thus will be completely spoiled.

In the "perforated spindle system" the precipitate present in the dye-bath will divide itself evenly over all the cops, and may, therefore, be less troublesome.

Skewers made of iron, or preferably of brass or "nickelin," are used when dyeing with the substantive dyestuffs.

The cops may be washed in the machine, and afterwards hydroextracted, or the excess of water may be removed by means of compressed air or by suction.

Cheeses may also be dyed with the substantive dyestuffs by the "Foam Dyeing" system. See p. 363.

Dyeing of Cotton Warps.

Cotton warps are dyed with the substantive dyestuffs in the ordinary *warp dyeing machine.* If the warps do not require bleaching, it will be sufficient to charge the first box of the machine with a boiling soda solution for the purpose of wetting

out. The addition of Turkey-red oil in place of soda ash is particularly useful in producing level shades on mercerised warps. The other boxes contain the dyestuff solution.

Two ends through the machine will be ample for light shades. Half of the colour solution should be added for each end.

For dark shades 4 or 6 ends are necessary. The boxes are first charged with about one-half of the dyestuff solution, whilst the remainder is allowed to run into the machine continuously during dyeing.

Cotton warps are now dyed very extensively on the beam in machines, such as the "Pornitz." See "Warp Dyeing," Fig. 86 p. 365.

Light shades may be dyed in the "size." It is advisable to prepare the colour solution and the size separately and to mix them before using. The dry warps are usually sized twice. Shades produced in the size are not as fast as shades which have been dyed in the ordinary manner and sized afterwards.

Dyeing of Cotton Piecegoods.

The "preparation" of cotton piecegoods for dyeing has been fully explained under "Bleaching." Only the cheapest kinds of material are dyed without previous scouring or bleaching. *Crabbing*, followed by steaming, is also employed, especially for heavy goods.

Although the *spiral dye-beck* is used in dyeing cotton piecegoods with the substantive dyestuffs, the *jigger* is much more commonly employed.

Very light and delicate shades are dyed in a "long" bath, with the addition of soap and sodium phosphate, whilst heavier shades may be dyed in a "short" bath, with the addition of soda and Glauber's salt.

In some cases it is advisable to give four ends with the dyestuff and the soda, and to add the Glauber's salt after the fourth end.

Heavy goods are more readily and thoroughly penetrated when Turkey-red oil or Monopole soap is added to the dye-bath.

A *padding machine*, with either two or three squeezing rollers, is sometimes used for dyeing light shades with the substantive dyestuffs. Shades which are not required to be fast may be dyed in a single passage through the padding machine. It is

then usually the practice to add a small quantity of dextrine solution ($\frac{1}{2}$ lb. to 1 lb. per 10 gallons of padding liquor) or tragacanth-thickening to the padding liquor.

For heavy shades, two or four passages through the padding machine are required. The padding liquor is prepared with $\frac{1}{5}$ to $\frac{1}{3}$ oz. of soda per 20 gallons, one-half of the dyestuff solution is added, and the pieces are given one end at about 100° F. The remainder of the dyestuff solution is now added, and the pieces are given another end. The liquor is now heated to 150° to 180° F., $\frac{1}{2}$ to 1 oz. of Glauber's salt is added per 20 gallons, and the pieces are given another end. After this the same quantity of Glauber's salt is added and the final end given.

Light shades may also be dyed in the starching operation.

Continuous Open-width Dyeing Machines are now largely used for dyeing blacks, dark blues, and browns.

For the dyeing of *Oxydiamine Black AT*, or *JB*, for instance, a machine may be used consisting of four compartments. A pair of metal squeezing rollers, of which the upper one is covered with rubber, and suitable openers are provided for each compartment. The dye-liquor is heated by means of a closed steam coil. In the first compartment, which is charged with about $3\frac{1}{2}$ lbs. of soda ash, the cotton is boiled out. The bath is continuously re-charged with $\frac{1}{2}$ per cent. of soda ash, calculated on the dry weight of the cloth, during dyeing. The soda bath has to be replaced twice per day on account of the impurities which it removes from the cotton.

The other three compartments, formed by two perforated partitions, are charged with about 650 gallons of dye-liquor, containing $2\frac{1}{2}$ lbs. Oxydiamine Black, per 10 gallons of liquor, dissolved with the addition of a small quantity of soda; 5 to $5\frac{1}{2}$ per cent. of dyestuff, calculated on the dry weight of cotton, are added during dyeing. $1\frac{1}{3}$ gallons of the following dyestuff solution should be divided equally between the three compartments, after the passage of every piece:—

145 lbs. Oxydiamine Black, and 13 lbs. soda ash, dissolved in 130 gallons of water.

The quantities are calculated on a daily production of 100 pieces, total weight 2,650 lbs.

The speed of the machine should be regulated so as to allow the pieces to remain in contact with the dye-liquor for about

3 minutes. The goods are plaited down into a wagon, after dyeing, and are finally rinsed.

Dyeing of Mercerised Piecegoods.

Mercerised fabrics are as a rule dyed in the jigger. They require about 20 per cent. less dyestuff than non-mercerised fabrics. No Glauber's salt should be added to the dye-bath when dyeing light shades. It is best to give the pieces first two ends with 1 to 2 per cent. of soap, Monopole oil or Monopole soap, and 2 to 5 per cent. of sodium phosphate or soda. The dyestuff solution should then be added in two portions, and the dyeing commenced at 100° to 120° F. The temperature of the dye-bath is then gradually raised to about 180° F.

When dyeing heavy shades it is advisable to give either two or four ends in the liquor containing the dyestuff, the soap, and the soda, and then to add the Glauber's salt in two portions, giving four or six ends more.

Diazotising and Developing of the Substantive Dyestuffs.

Method (2).

The fastness to washing and soaping of a number of substantive cotton dyestuffs may be considerably improved by diazotising and developing. The depth of shade is also, in many cases, considerably increased by this treatment.

The cotton is dyed in the usual manner; it should be rinsed before entering into the nitrite bath. Wringing or hydro-extracting after the rinsing may be dispensed with in most cases.

The diazotising bath, which must be used cold, is prepared in the following manner:—For 100 lbs. of cotton, add to the bath 2½ lbs. nitrite of soda, dissolved in cold water. Stir and add 7½ lbs. hydrochloric acid, 32° Tw., or 5 lbs sulphuric acid, 168° Tw.

If the bath is used for diazotising further lots, only one-third, of the above quantities should be added for every fresh quantity of cotton.

An excess of nitrous acid in the diazotising bath has no injurious effect; it should, however, be carefully avoided on account of economy.

The presence of free nitrous acid can be readily detected. A

piece of potassium iodide starch paper, when dipped into the bath, turns blue.

The process of diazotising is best carried out in wooden vessels.

The diazotising is usually completed after 10 to 15 minutes. The material is now allowed to drain (wringing or squeezing is not necessary), and it should then be immediately rinsed in a cold bath containing about ¼ gallon of hydrochloric acid per 100 gallons of water.

The goods must not be exposed to direct sunlight whilst in the diazotising bath, or after diazotising and before developing, and they must not be allowed to come into contact with hot steam pipes, or the diazo-compound will be decomposed and uneven shades will be produced.

The material is now, without delay, transferred to the cold *developing bath*, in which it is treated for a short time. Rinsing and, if necessary, soaping complete the process.

Preparation of the Stock Solutions for Developing.

(*a*) *Phenol.*

Mix 4 lbs. 11 ozs., with 12 lbs. caustic soda lye, 77° Tw., and dissolve in 10 gallons boiling water.

(*b*). *Alpha Naphthol.*

(*c*). *Beta Naphthol.*

Dissolve 7 lbs. 3 ozs., in 6 lbs. caustic soda lye 77° Tw., and 10 gallons boiling water.

(*d*). *Resorcine.*

Mix 5½ lbs. with 12 lbs. caustic soda lye 77° Tw., and dissolve in 10 gallons boiling water.

(*e*). *Meta-toluylene diamine.*

4½ lbs. and ½ lb. soda ash are dissolved in 10 gallons water.

(*f*). *Nerogene D (Be.).*

Stir 1½ lbs. with ½ gallon water, at ordinary temperature, add 1½ lbs. hydrochloric acid 32° Tw., stir until completely dissolved, pour the solution into the developing bath and add afterwards 5 lbs. of soda ash.

(*g*). *Oxamine Developer B (Ba.).*

Dissolve the developer in hot water.

(*h*). *Oxamine Developer M* (*Ba.*).

Dissolve the developer in hot water, and add 1-3 lbs. of soda ash to the developing bath.

(*i*). *Oxamine Developer R* (*Ba.*).

Dissolve 5 lbs. of the developer with the addition of 1 lb. of hydrochloric acid.

(*j*). *Soda.*

Diazotise in the usual manner, rinse without the addition of acid, work for about 20 minutes at about 120° F., in a bath containing 2·5 to 5 per cent of soda ash.

(*k*). *Amidonaphtholsulphonic acid* [*Blue Developer AN* (*Ca.*)].

13½ lbs. of the developer are mixed with 10 gallons cold water. Allow to stand until frothing has ceased, and raise the temperature to the boil.

(*l*). *Amidodiphenylamine* [*Fast Blue Developer AD* (*Ca.*)].

3 lbs. 11 ozs. of the developer are dissolved in 10 gallons boiling water, to which 1½ lbs. hydrochloric acid has been added.

(*m*). *Beta-naphtholsulphonic acid* (*Schaeffer's acid*).

12½ lbs. of the developer and 7½ lbs. soda ash are dissolved in 10 gallons boiling water.

(*n*). *Meta-phenylene diamine.*

4½ lbs. of the developer and 1½ lbs. of soda ash are dissolved in 10 gallons boiling water.

(*o*). *Ethyl beta-naphthylamine* (*Developer B*).

4½ lbs. of developer are dissolved in 20 gallons of water with the addition of 1 lb. hydrochloric acid.

(*p*). *Bordeaux Developer* (*ML., Ca.*).

21 lbs. 4½ ozs. developer are dissolved in 10 gallons boiling water, to which 1½ pints hydrochloric acid have been added.

(*q*). *Naphthylamine ether powder* (*Ca.*).

2 lbs. 4½ ozs. are dissolved in 1 lb. 2 ozs. hydrochloric acid and 10 gallons boiling water.

(*r*). *Naphthylamine ether N powder* (*Ca.*).

2 lbs. 4½ oz. are dissolved in 10 gallons boiling water with the addition of ½ pint hydrochloric acid.

The following quantities of the above solutions are added to the developing bath for medium and dark shades, per 10 lbs. of

cotton :—(*a*), (*b*), (*c*), (*d*), (*m*) : $1\frac{1}{4}$ pints; (*e*), (*k*), (*n*) : $1\frac{1}{2}$ pints; (*l*) : 4 pints; (*p*), (*q*), (*r*) : $6\frac{1}{2}$ pints; (*f*) : $1\frac{1}{2}$ ozs. developer and 5 ozs. of soda ash are added to the developing bath after the developer has been added; (*g*), (*i*) : $1\frac{1}{2}$ to $2\frac{1}{2}$ ozs. of the developer; (*h*) : $1\frac{1}{2}$ to $2\frac{1}{2}$ ozs. developer and $1\frac{1}{2}$ to 5 ozs. soda ash should be added to the developing bath; (*o*) : 3 pints.

If the developing bath is used repeatedly, only $\frac{3}{4}$th of the quantities of developer given above should be added for each subsequent lot of cotton.

The developed colours may be *after-treated* with copper sulphate in the same manner as the substantive dyestuffs. The fastness to light is thereby improved in many cases.

Shades obtained by diazotising and developing may be *topped* with basic cotton dyestuffs. The method is the same as for the substantive dyestuffs.

A great variety of shades may be produced by dyeing with two or more diazotisable dyestuffs in the same bath followed by diazotising and developing.

Diazotisable dyestuffs may also be dyed together with dyestuffs which are not affected by the process of diazotising.

Very good results are obtained by diazotising and developing with more than one developer. Thus beta-naphthol may be used together with resorcine or with toluylene diamine; or resorcine may be used with phenylene diamine or toluylene diamine.

Loose Cotton.

When diazotising loose cotton it is of importance that the material should be completely cooled before entering it into the diazotising bath.

In order to work economically it is necessary to provide three vessels, the first containing the nitrite solution; the second, acidulated water; and the third, the developing bath.

The diazotising, souring and developing may also be carried out in an ordinary washing machine.

Convenient methods of treating small quantities of loose cotton after dyeing have been suggested by Cassella & Co.

Three vessels are provided in which the cotton rests on perforated false bottoms, which can be lifted out. In this

manner the cotton may be conveniently transferred from one bath to the other.

Another method consists in placing the cotton into a net, which may be lifted and passed from one vessel into the next.

For a large production the following method has been found very convenient:—Three tanks are built into the ground close to the vessel in which the cotton is dyed. Of these the middle one is placed immediately below the dye-vessel. Into this the dye-liquor is run after dyeing. The cotton is now rinsed and the diazotising solution contained in one of the other two tanks is pumped over it, allowed to act for 15 to 20 minutes, and then run back into the tank. The cotton is then slightly rinsed and treated with the developing bath contained in the third tank.

If loose cotton is dyed in special machines, all the different processes may be carried out in the machine; less sodium nitrite, (about 1 to 1½ per cent.), and hydrochloric acid, (about 3 to 5 per cent.), should in this case be used.

It is also advisable to circulate the nitrite solution with a small portion of the hydrochloric acid for some minutes through the material, and to add the remainder of the acid gradually.

Cotton Yarn.

The operations are carried out in the manner described in the introduction.

Cops and Cheeses.

The treatment of cops and cheeses in special dyeing machines is the same as that recommended for loose cotton.

Warps.

Cotton warps may be diazotised and developed in an ordinary warp dyeing machine. The warps are rinsed in the first box and passed through the nitrite solution in the second box. Half the sodium nitrite and the hydrochloric acid is added first, whilst the other half is allowed to flow gradually into the box during the passage of the warps. The third box contains running water or acidulated water, and the last box the developing bath.

The warps are now passed through a washing machine and are finally dried.

Cotton Piecegoods.

When diazotising and developing piecegoods in the jigger, two ends should be given both in the nitrite bath and in the developing bath. One half of the additions should be made before running the pieces the first end, the other half before the second end.

The construction of a *Continuous Machine for Diazotising and Developing* is illustrated in Fig. 58. (*Die Baumwollfärberei*, L. Cassella & Co.).

A is the compartment containing the diazotising solution. I and II are two vessels containing the solutions of sodium

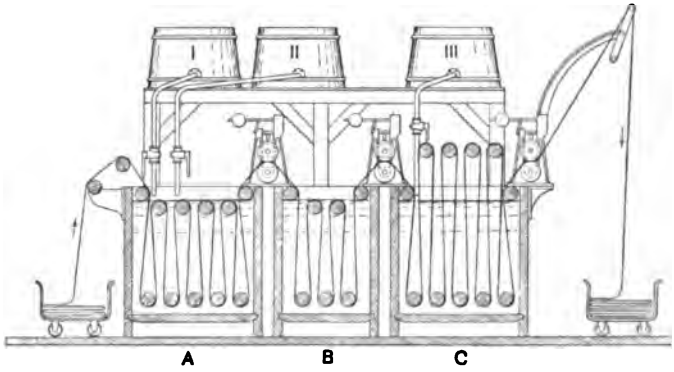

FIG. 58.—Continuous Machine for Diazotising and Developing.

nitrite and of hydrochloric acid respectively, from which A is continuously fed. B contains acidulated water, and C the developing bath. III contains the stock solution of the developer, which is gradually run into C.

A is filled half full with water containing 1½ lbs. sodium nitrite and 5 lbs. hydrochloric acid, per 100 gallons.

I is charged with 1 per cent. of sodium nitrite, dissolved in water, and II with 3 per cent. of hydrochloric acid, diluted with water (both calculated on the dry weight of cloth which it is intended to pass through the machine). The flow of the solutions from I and II should be regulated in such a manner that the whole amount has been discharged as soon as the last piece has passed through the machine. The diazotising bath should always smell faintly, not strongly, of nitrous acid.

B is supplied with running water, to which, from time to time, a small quantity of hydrochloric acid is added. The bath should always react slightly acid.

For developing, C is charged with 1½ lbs. beta-naphthol and 1½ lbs. caustic soda lye, 77° Tw., per 100 gallons of liquor.

III is charged with 0·6 per cent. beta-naphthol and 1½ per cent. caustic soda lye, calculated on the dry weight of cloth.

Other developers may be used in place of beta-naphthol in the proportions given on p. 218.

After developing, the pieces are allowed to lie for about 1 hour. They are finally rinsed and, if necessary, soaped.

Coupling of the Direct Dyeing Cotton Dyestuffs on the Fibre with Paranitraniline.

Method (3).

A number of the direct dyeing cotton dyestuffs may be coupled on the fibre with *diazotised paranitraniline*, *Nitrazol* (*Ca.*), *Azophor Red* (*ML.*), *Nitrosamine* (*Ba.*). The fastness of the shades to washing, to milling, and to acids is thereby considerably increased.

The method consists in treating the dyed, rinsed cotton for about ½ hour in the cold coupling bath, which has been charged with the necessary quantities of diazotised paranitraniline, soda and sodium acetate.

For the purpose of shading, principally blacks, blues, etc., a small quantity of a solution of a basic cotton dyestuff, such as Methylene Blue, Methyl Violet, etc., may be added direct to the coupling bath.

The cotton should be well rinsed after coupling.

The following coupling baths may be used:

Paranitraniline C (*Ca.*). For 100 lbs. of cotton dyed with 3 to 4 per cent. of dyestuff use 5 to 7 gallons diazotised paranitraniline C, ¾ to 1 lb. soda ash, and 5 to 6½ lbs. sodium acetate.

Preparation of the diazotised paranitraniline C. 2 lbs. paranitraniline C; 1½ gallons boiling condensed water; stir well, and add ½ gallon hydrochloric acid, 32° Tw.; stir until completely dissolved and add 3½ gallons cold water. The hydrochloride of paranitraniline will be precipitated in the form of a yellow paste. Allow to cool, and when quite cold, add whilst

continuously stirring ½ lb. nitrite of soda dissolved in 1 gallon cold water. The solution becomes clear after about 20 minutes, and is now made up with cold water to 20 gallons. The diazo-solution will keep for some time, but it must be stored either in wooden or earthenware vessels and protected from heat and sunlight.

When using *Nitrazol C* (Ca.) in place of paranitraniline the solution is prepared by stirring the Nitrazol into a uniform paste with a small quantity of water, at 68° to 77° F. A sufficient quantity of cold water is then added to dissolve the Nitrazol completely.

3 to 4 lbs. Nitrazol C, ¾ to 1 lb. soda ash and 3 to 4 ozs. sodium acetate or 2 to 4 per cent. of *Azophor Red* or *Azophor Orange* (ML.) and 1 to 2 per cent. of sodium acetate may be used in place of diazotised paranitraniline for 100 lbs. of cotton, dyed with 3 to 4 per cent. of dyestuff. For the method of dissolving these substances, see p. 277.

Coupling with Nitrosamine Red paste (*Ba.*). Mix 3¼ lbs. Nitrosamine Red paste with 5½ gallons cold water and pour in slowly, while stirring, 1 lb. 5 ozs. hydrochloric acid, 32° Tw. Allow to stand for ½ hour, pour the mixture into the cold coupling bath and add immediately before entering the cotton a solution of 1 lb. 5 ozs. sodium acetate.

Loose Cotton.

Shades, chiefly blacks and browns, dyed on loose cotton may be coupled with paranitraniline, etc., in any ordinary dye-vessel. The coupling bath should be used about one-fourth stronger than given above; it is desirable to omit the addition of soda and sodium acetate.

Cops and Cheeses.

The coupling is carried out in the dyeing machines. A somewhat larger quantity of paranitraniline should be used, without the addition of soda or sodium acetate. One half of the quantity required should be added at the beginning, the other half after the liquor has been allowed to circulate for 10 to 15 minutes. After coupling, the material is thoroughly rinsed, and, if necessary, soaped.

Cotton Yarn.

Shades dyed on cotton yarn are coupled in the ordinary dye-beck.

Cotton Warps.

Cotton warps dyed with certain of the direct dyeing cotton dyestuffs are coupled with paranitraniline, etc., by giving them either one or two passages through an ordinary warp dyeing machine containing the cold diazo-solution.

100 lbs. of warps require about 130 gallons liquor, 9 to 13 gallons diazotised paranitraniline, or 4 to 6 lbs. Nitrazol C, 1 to 1½ lbs. soda ash and 4 to 6½ ozs. sodium acetate.

Two separate solutions (1 and 2) are prepared and kept in small vessels placed above the machine. The coupling bath is continuously fed from these vessels during the passage of the warps through the machine.

Solution (1). 9 gallons diazotised paranitraniline reduced with cold water, or 4 lbs. of Nitrazol C dissolved in 10 gallons of cold water.

Solution (2). 1 lb. 1½ ozs. soda ash, 5 ozs. sodium acetate, 10 gallons water.

After coupling, the warps are thoroughly rinsed in hot water and soaped.

Piecegoods.

The following method is applied when coupling piecegoods, dyed with substantive dyestuffs.

The dyed, well-rinsed pieces are given two ends in the jigger, which is charged per 10 gallons of liquor with 2⅞ pints diazotised paranitraniline, ⅔ oz. soda ash, ⅓ oz. sodium acetate, and, in addition, according to the depth of the shade, for every 10 lbs. of material, 2⅞ to 5¾ pints diazotised paranitraniline, ¾ to 1½ ozs. soda ash and ½ to ⅔ oz. sodium acetate.

In place of the diazotised paranitraniline used above, 3¼ ozs. and 3 to 6½ ozs. respectively, of Nitrazol C, or 2 to 4 per cent. of Azophor Red and 1 to 2 per cent. sodium acetate may be used.

The coupling may be carried out in the padding machine as described under "Paranitraniline Red."

Two passages should be given, and the strength of the diazo-solution should only be one-third or one-fourth of that used for Paranitraniline Red.

After coupling, the pieces are batched or plaited down, allowed to lie for ½ to 1 hour, rinsed and dried.

For the purpose of shading, basic dyestuffs, such as Methylene Blue, etc., may be added to the coupling bath.

After-treatment of the Substantive Cotton Dyestuffs with Metallic Salts, etc.

It is well known that the fastness to light of shades which have been dyed with the substantive cotton dyestuffs is improved if the goods are heavily stiffened with starches, gums, etc., after dyeing.

The fastness of dyestuffs which are sensitive to acid, such as the *Benzopurpurines*, is considerably increased, if the cotton is not rinsed after dyeing, *i.e.*, if the cotton is allowed to retain some of the alkaline dye-liquor. The shades may be brightened, and at the same time made faster by an after-treatment with soda (3 to 5 per cent. solution) or with soda, 5 parts, and Turkey-red oil, 20 parts, per 100 parts of water.

The shades of substantive blacks are improved by passing them through a lukewarm bath, containing about 1 lb. of soap and ½ lb. of olive oil per 20 gallons.

In the following part the different methods of after-treatment of the substantive cotton dyestuffs for the purpose of increasing their fastness to light and to washing will be described.

Method (4).

The material is well rinsed after dyeing, and treated for ½ hour at the boil with 2 to 3 per cent. of potassium, or sodium bichromate, with or without the addition of a small quantity of acetic acid.

Method (5).

Rinse the material well after dyeing and treat for ½ hour at 120° to 140° F., with 1 to 4 per cent. of copper sulphate and 1 to 2 per cent. acetic acid; rinse and dry.

Basic dyestuffs may be added to the copper bath for shading purposes. In this case the cotton ought to be entered cold, and the bath heated gradually to 140° F.

The after-treatment with copper sulphate improves the fastness to washing, but especially the fastness to light. Shades

dyed with *Benzoazurine*, for instance, become faster to light than indigo.

Salts of nickel and cobalt, if used in place of copper sulphate, do not alter the shades quite as much.

They are, however, more expensive, and they do not improve the fastness to light as much as an after-treatment with copper sulphate.

Method (6).

The well-rinsed material is treated for ½ hour at 140° to 212° F., with 1 to 3 per cent. of bichrome, 1 to 3 per cent. of copper sulphate, and 1 to 3 per cent. acetic acid.

Shades treated by this method are faster to washing than those treated with copper sulphate alone, whilst the fastness to light is the same.

1 to 2 per cent. of sulphuric acid 168° Tw. may be used in place of the acetic acid. The cotton should be finally well rinsed and, if necessary, soaped.

Method (8).

The fastness to washing may also be improved by treating the dyed, well-rinsed material for 15 to 20 minutes at 120° to 140° F., or for ½ hour in a cold bath with ½ to 3 per cent. of formaldehyde (40 per cent). 2 to 3 per cent. of acetic acid may be added to the formaldehyde bath.

Method (9).

The fastness to washing and to acids of some of the substantive dyestuffs is improved by an after-treatment with *Solidogen* (Meister, Lucius and Brüning). Rinse the cotton well after dyeing, and treat for ½ hour in the boiling Solidogen bath. Finally rinse well and dry.

The bath is prepared by adding first 2 per cent. hydrochloric acid, and then 2 to 6 per cent. Solidogen.

5 to 10 lbs. of ammonium sulphocyanide should be added first per 100 gallons of liquor, if the treatment has to be carried out in copper vessels.

Method (10).

The fastness to washing may be improved by one of the following treatments:—

Treat the dyed, well-rinsed cotton for ½ hour at 140° to 212° F., with 2 to 4 per cent. chromium chloride (20° Bé.), or 2 to 4 per

cent. chromium fluoride and 2 to 3 per cent. acetic acid, or 4 to 5 per cent. chrome alum and 2 to 3 per cent. acetic acid; rinse and dry. The fastness to light is not affected by these after-treatments.

Method (11).

Very fast reddish-yellow shades are produced by dyeing with *Primuline* and after-treating with a solution of bleaching powder.

The well-rinsed cotton is treated for ¼ hour at 70° F. in a bath containing ½ gallon of bleaching powder solution, 15° Tw., per 100 gallons of water, and finally well rinsed. The higher the temperature of the bleaching powder solution, the yellower will be the shade obtained.

If the temperature is gradually raised to 120° F., the reddish tone gives place to a clear yellow; this, however, slowly deteriorates with age, going back to the original shade.

The fastness to water of shades dyed with the substantive dyestuffs may also be improved by an after-treatment with a ½ per cent. solution of alum, or 5 per cent. of aluminium acetate (10° Tw.) The cotton should be treated in the cold bath for about 15 minutes.

For the same purpose the following may also be employed: ½ per cent. aluminium sulphate and ½ per cent. sodium acetate; or ½ per cent. aluminium sulphate and ¼ per cent. soda ash; or 2 to 3 per cent. pyrolignite of iron, 15° Tw.

The after-treatment with pyrolignite of iron renders the shades somewhat duller.

In order to improve the fastness to washing of the substantive cotton dyestuffs, Warr suggests an after-treatment with magnesium sulphate followed by a passage through a weak solution of caustic soda.

The Bayer Company recommend the addition of a small quantity of stannate of soda to the caustic soda bath, by means of which the shades become still faster. By applying this treatment to *Benzo Fast Scarlet*, a red is obtained which is almost as fast as some of the diazotised and developed reds.

The fastness to washing of the substantive dyestuffs dyed on cops or cheeses may be improved by an after-treatment with a solution of sulphate-acetate of alumina.

Blacks and other dark shades may be after-treated with

tannins, fixed with pyrolignite of iron. The cotton is considerably weighted by this method.

The after-treatments described can be carried out in the vessels or machines used for dyeing materials such as cops, cheeses, etc.

Topping of Substantive Dyestuffs with Basic Dyestuffs.

Shades produced by dyeing with the substantive cotton dyestuffs do not, as a rule, possess the brilliancy and richness "over hand" of the basic cotton dyestuffs dyed on a tannin-antimony mordant.

The property of the substantive dyestuffs to act as a mordant for the basic dyestuffs is frequently made use of.

For this purpose the material, dyed with the substantive dyestuff in the usual manner, is rinsed and topped with a basic dyestuff in a separate bath. In order to prevent uneven dyeing, the dyestuff solution should be added in portions and an addition of a small quantity of acetic acid or alum should be made to the dye-bath.

Another method consists in dyeing the cotton in a bath which contains besides the substantive dyestuff an addition of 2 to 4 per cent. of tannic acid. The material is treated for 1 hour at the boil and allowed to remain in the cooling bath for some time. After wringing or hydroextracting, the tannic acid is fixed in a fresh bath with tartar emetic. The cotton is now washed and topped with the basic dyestuff.

Duller and darker shades are obtained if pyrolignite of iron or another iron mordant is used in place of the tartar emetic.

The fastness of shades obtained by the last two methods is very satisfactory, whilst shades obtained by the first method are not as fast as similar shades produced by dyeing with a basic dyestuff on a tannin-antimony mordant.

PART X

SULPHUR DYESTUFFS

Yellows and Oranges.

Auronal Orange (W.).
Auronal Yellows (W.).
Cross Dye Yellow (H.).
Eclipse Phosphines (G.).
Eclipse Yellows (G.).
Immedial Orange (Ca.).
Immedial Yellow (Ca.).
Katigen Yellows (By.).
Kryogene Yellows (Ba.).
Pyrogene Orange (CI.).
Pyrogene Yellows (CI.).
Pyrol Yellows (Leo.).
Sulphurol Orange (Da.).
Sulphurol Yellows (Da.).
Sulphur Yellow (Be.).
Thiogene Golden Yellow (ML.).
Thiogene Oranges (ML.).
Thiogene Yellows (ML.).
Thional Yellows (Sa.).
Thionol Oranges (Lev.).
Thionol Yellows (Lev.).
Thion Oranges (Ka.).
Thion Yellows (Ka.).
Thiophor Cutch G, R, RR (J.).
Thiophor Khaki (J.).
Thiophor Orange (J.).
Thiophor Yellows (J.).
Thioxine Orange (Oe.).
Thioxine Yellow (Oe.).

Reds.

Auronal Corinth (W.).
Immedial Bordeaux (Ca.).
Katigen Bordeaux (By.).
Sulphur Corinth (Be.).
Sulphurol Bordeaux (Da.).
Thiogene Dark Reds (ML.).
Thiogene Purple (ML.).

Blues and Violets.

Auronal Blues (W.).
Cross Dye Blues (H.).
Eclipse Blues (G.).
Eclipse Fast Dark Blues (G.).
Eclipse Violet (G.).
Immedial Blues (Ca.).
Immedial Dark Blue (Ca.).
Immedial Direct Blues (Ca.).
Immedial Green Blues (Ca.).
Immedial Indogene (Ca.).
Immedial Indone (Ca.).
Immedial Indone Violet (Ca.).
Immedial New Blue (Ca.).
Immedial Prune (Ca.).
Immedial Purple (Ca.).
Immedial Sky Blue (Ca.).
Immedial Violet (Ca.).
Katigen Azurine (By.).
Katigen Blue B. (By.).
Katigen Chrome Blues (By.).
Katigen Dark Blue (By.).
Katigen Direct Blue (By.).
Katigen Indigos (By.).
Katigen Navy Blues (By.).
Katigen Violets (By.).
Kryogene Black Blues (Ba.).
Kryogene Blues (Ba.).
Kryogene Direct Blues (Ba.).
Kryogene Violet (Ba.).
Melanogene Blues (ML.).
Pyrogene Blues (CI.).
Pyrogene Cyanine (CI.).

Pyrogene Direct Blues (CI.).
Pyrogene Indigos (CI.).
Pyrol Blues (Leo.).
Pyrol Direct Blue (Leo.).
Pyrol Navy Blue (Leo.).
Sulphur Blue L extra (Be.).
Sulphur Indigo (Be.).
Sulphurol Direct Blue (Da.).
Sulphorol Indigo (Da.).
Thiogene Blues (ML.).
Thiogene Cyanines (ML.).
Thiogene Dark Blues (ML.).
Thiogene Deep Blue (ML.).
Thiogene Heliotrope (ML.).
Thiogene New Blues (ML.).
Thiogene Violets (ML.).
Thional Blues (Sa.).
Thional Indigos (Sa.).
Thion Blue (Ka.).
Thion Deep Violet (Ka.).
Thion Direct Blues (Ka.).
Thion Navy Blues (Ka.).
Thion Violets (Ka.).
Thionol Blues (Lev.).
Thionol Brilliant Blue (Lev.).
Thionol Dark Blue (Lev.).
Thionol Dark Purple (Lev.).
Thionol Direct Blue (Lev.).
Thiophor Blues (J.).
Thiophor Cyanine (J.).
Thiophor Dark Blues (J.).
Thiophor Indigos (J.).
Thiophor Navy Blues (J.).
Thiophor Violet (J.).

Greens.

Auronal Greens (W.).
Cross Dye Greens (H.).
Eclipse Fast Greens (G.).
Eclipse Fast Olive (G.).
Eclipse Greens (G.).
Eclipse Olive (G.).
Immedial Brilliant Green (Ca.).
Immedial Dark Green (Ca.).
Immedial Deep Green (Ca.).
Immedial Greens (Ca.).
Immedial Olives (Ca.).
Immedial Yellow Olive (Ca.).
Katigen Brilliant Greens (By.).
Katigen Dark Green B (By.).
Katigen Greens (By.).
Katigen Olives (By.).
Kryogene Olives (Ba.).
Pyrogene Blue Green B (CI.).
Pyrogene Dark Green B, 3B (CI.).
Pyrogene Green 2G, 3G (CI.).
Pyrol Greens (Leo.).
Sulphurol Dark Greens (Da.).
Sulphurol Greens (Da.).
Sulphur Olive (Be.).
Thiogene Greens (ML.).
Thion Greens (Ka.).
Thion Olive (Ka.).
Thional Brilliant Green (Sa.).
Thional Dark Green (Sa.).
Thional Greens (Sa.).
Thionol Brilliant Greens (Lev.).
Thionol Dark Green (Lev.).
Thionol Greens (Lev.).
Thionol Olive (Lev.).
Thiophor Dark Green (J.).
Thiophor Deep Green (J.).
Thiophor Greens (J.).
Thiophor Olives (J.).
Thiophor Yellow Olive (J.).
Thioxine Olives (Oe.).

Browns.

Auronal Black Browns (W.).
Auronal Khaki (W.).
Cachou de Laval (Poir.).
Cachou R. (Poir.).
Cross Dye Browns (H.).
Cross Dye Drab (H.).
Eclipse Red Brown conc. (G.).
Immedial Bronze (Ca.).
Immedial Browns (Ca.).
Immedial Cutch (Ca.).
Immedial Dark Browns (Ca.).
Immedial Maroon (Ca.).
Immedial Red Brown (Ca.).
Immedial Yellow Brown (Ca.).
Katigen Black Browns (By.).
Katigen Bronze GL (By.).

Katigen Browns (By.).
Katigen Chrome Brown (By.).
Katigen Cutch (By.).
Katigen Khaki G extra (By.).
Katigen Red Browns (By.).
Katigen Yellow Browns (By.).
Kryogene Browns (Ba.).
Kryogene Red Brown (Ba.).
Pyrogene Browns (CI.).
Pyrogene Catechu (CI.).
Pyrol Bronze (Leo.).
Pyrol Browns (Leo.).
Pyrol Dark Browns (Leo.).
Pyrol Red Brown (Leo.).
Sulphur Browns (Be.).
Sulphur Catechu (Be.).
Sulphurol Browns (Da.).
Sulphurol Dark Brown (Da.).
Thiocatechine I, III (Poir.).
Thiogene Bronze (ML.).
Thiogene Browns (ML.).
Thiogene Cutch (ML.).
Thiogene Khaki (ML.).
Thiogene Olive (ML.).
Thiogene Yellow Brown (ML.).
Thional Bronze (Sa.).
Thional Browns (Sa.).
Thional Dark Browns (Sa.).
Thion Browns (Ka.).
Thion Cutch R, 2R (Ka.).
Thion Violet Brown (Ka.).
Thionol Brilliant Corinth (Lev.).
Thionol Browns (Lev.).
Thional Corinth (Lev.).
Thionol Khaki (Lev.).
Thiophor Black Browns (J.).
Thiophor Bronze (J.).
Thiophor Browns (J.).
Thiophor Dark Brown (J.).
Thiophor Red Brown (J.).
Thiophor Violet Brown (J.).
Thiophor Yellow Brown (J.).
Thioxine Browns (Oe.).

BLACKS

Autogene Black (Poir.).
Auronal Blacks (W.).
Black EEB (Poir.).
Cross Dye Black (H.).
Eclipse Blacks (G.).
Immedial Blacks (Ca.).
Immedial Brilliant Blacks (Ca.).
Immedial Brilliant Carbons (Ca.).
Immedial Carbons (Ca.).
Indo Carbon S, SF pat. (Ca.).
Katigen Blacks (By.).
Katigen Blue Blacks (By.).
Katigen Brilliant Black (By.).
Katigen Deep Blacks (By.).
Kryogene Blacks (Ba.).
Osfathion Black (OSF.).
Pyrogene Black (CI.).
Pyrogene Deep Black (CI.).
Pyrogene Greys (CI.).
Pyrol Blacks (Leo.).
Pyrol Blue Black (Leo.).
Pyrol Brilliant Black (Leo.).
Sulphenol Blacks (C.).
Sulphur Blacks (Be.).
Sulphurol Blacks (Da., Cl.).
Thiogene Blacks (ML.).
Thiogene Diamond Black (ML.).
Thional Blacks (Sa.).
Thion Blacks (Ka.).
Thionol Blacks (Lev.).
Thionol Brilliant Blacks (Lev.).
Thionol Greys (Lev.).
Thiophenol Blacks (CI.).
Thiophor Blacks (J.).
Thiophor Blue Black (J.).
Thiophor Brilliant Carbon (J.).
Thiophor Carbon (J.).
Thiophor Deep Black (J.).
Thiophor Field Grey (J.).
Thioxine Blacks (Oe.).
Vidal Black (Cl., Poir.).

The dyeing with sulphur dyestuffs, a considerable number of which have been introduced within the last few years, has made such enormous progress that, at the present moment, these

substances must be considered as one of the most important groups of cotton dyestuffs. Their fastness is in many instances excellent, and in not a few cases they have been able to replace some of the fastest colouring matters, such as Aniline black, indigo, catechu browns, khaki, logwood black, etc. The sulphur dyestuffs belong to the direct dyeing dyestuffs, although some of them may be dyed like vat-dyestuffs. Some of the substantive cotton dyestuffs may be dyed in the same bath with the sulphur dyestuffs. The dyestuff solutions must, however, be prepared separately. The application of the sulphur dyestuffs is, comparatively speaking, simple. The following general rules for dyeing may be given here. In nearly every instance the dyestuffs are dissolved with sodium sulphide and soda ash, and dyed with the addition of Glauber's salt or common salt. In many cases, however, the quantities of the different ingredients used and the methods of dyeing and of after-treatment vary very considerably, and for these reasons it is necessary, in order to obtain satisfactory results, to describe the principal methods of application somewhat in detail.

Dyeing of Loose Cotton.

The loose cotton is thrown into the boiling bath to which the dyestuff solution with the sodium sulphide and the soda has been added. Glauber's salt, or common salt, is added after the cotton has been properly penetrated by the dye-liquor. The material is now worked with poles for about ½ hour and allowed to simmer for another ½ hour. Although the cotton may now be removed from the dye-bath, it is by far better to allow it to remain (to "feed") in the cooling liquor for some hours, or even overnight.

Provision should be made for pumping the dye-liquor after dyeing into a storage tank, because washing and after-treatment, if required, may then be carried out in the dye-vessel itself.

Dyeing of Cotton Hanks.

The yarn may be boiled out in a high-pressure kier, but the method most commonly in use is to boil in an ordinary low-pressure kier for 6 to 8 hours with 4 to 6 per cent. of soda ash. The dye-vessels should be made of wood or iron; copper must be avoided. Satisfactory results may be obtained by treating the

hanks on ordinary dye-sticks, but it is by far better to employ *bent iron gas pipes*, which should not be less than 1 inch in diameter (Fig. 59). From 2 to 4 lbs. of yarn are usually placed on one stick. In this manner the hanks are completely immersed in the dye-liquor and very little oxidation of the dye-stuff can take place.

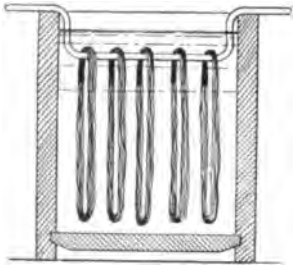

FIG. 59. — Dye-stick and Dye-vat for dyeing Cotton Hanks with Sulphur Dye-stuffs.

DYEING OF WARPS.

Warps may be dyed with the sulphur dyestuffs in an ordinary warp dyeing machine, but it is preferable to lower the top guide rollers so as to place them below the surface of the dye-liquor.

A *Special Warp Dyeing Machine*, illustrated in Fig. 60, is recommended by Messrs. L. Cassella & Co. for dyeing the *Immedial Blacks*.

The waggon A is divided into six to eight compartments, each of which contains a boiled warp. From here the warps pass

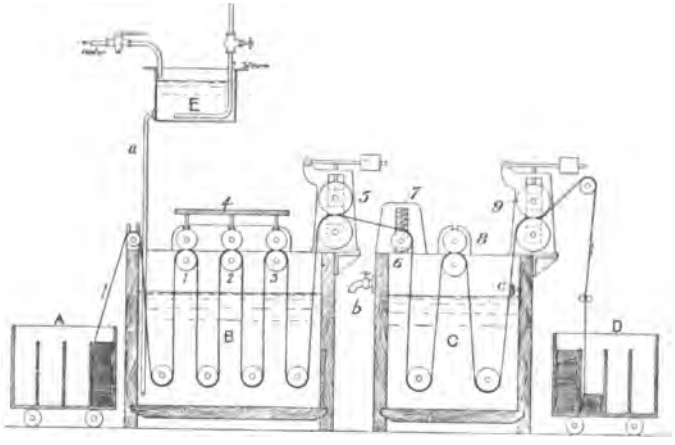

FIG. 60.—Special Warp Dyeing Machine for dyeing Sulphur Blacks.

into box B, which contains the dye-liquor; they are squeezed between the wooden rollers 1, 2, and 3, on to which uniform pressure is put by means of 4. After leaving the dye-bath, the

warps pass between heavy iron squeezing rollers 5, wrapped with cloth, over a wooden tension roller 6 into the washing box C. Roller 6 rests in a spiral spring by means of which the tension on the warps is automatically regulated. During washing, the warps pass between two light squeezing rollers 8, made of wood, and ultimately through the heavy iron rollers 9. The latter should also be well wrapped with cloth. The dye-beck is continuously fed with concentrated dyestuff solution from tank E through pipe *a*. The warps are finally plaited down into the waggon D, passed through a washing machine, and treated with sodium acetate.

Dyeing of Cops and Cheeses.

Cops or cheeses may be dyed in any type of apparatus, providing it does not contain any copper parts. Iron, nickel, "nickelin" (a nickel alloy), or apparatus which have been lined with lead, are best suited.

The steaming after dyeing, which is necessary when using certain dyestuffs, especially blues, may be carried out in the dyeing apparatus. It is, however, essential that the material should contain both caustic soda and sodium sulphide when it is steamed.

Dyeing of Cotton Piecegoods.

The ordinary *Lancashire Jigger* (see p. 368, Fig. 90), may be used for dyeing the sulphur dyestuffs. The jigger should, however, be provided with squeezing rollers. Continuous dyeing machines are suitable when a large production is required, and in some cases satisfactory results are obtained by applying the sulphur dyestuffs by means of the padding machine.

An *Arrangement of Jiggers with Squeezing Rollers* is illustrated in Fig. 61 (Messrs. Mather & Platt). One jigger is used for dyeing, the other one for washing off after dyeing. The dye-becks are of the ordinary type, but made entirely of iron, with wood or iron guide rollers and iron reversing or draw rollers of about 8 inches diameter. A swinging pressing roller made of iron is provided, which may be covered with rubber, by means of which the excess of dye-liquor is squeezed out. Additional pressure may be obtained by means of levers and weights. When dyeing

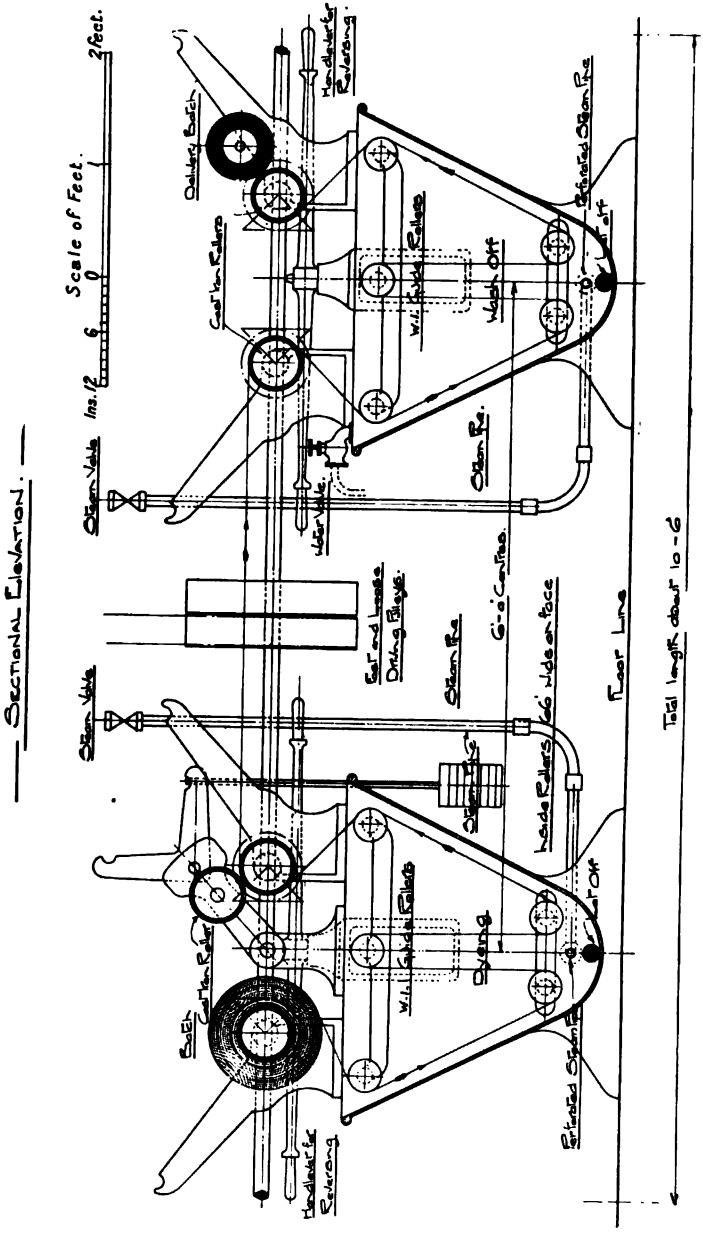

FIG. 61.—Arrangement of Jiggers with Squeezing Rollers.

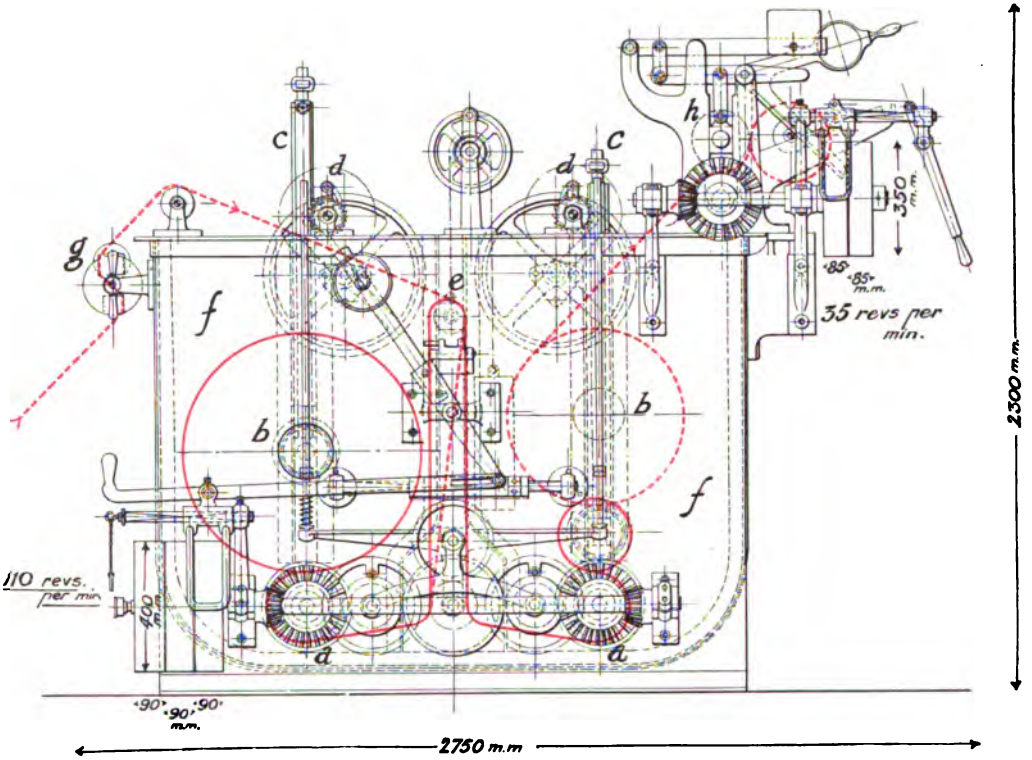

FIG. 63.—Under-water Jigger.

is completed the cloth passes immediately into the second jigger for washing off. One horse-power is required to drive the jiggers.

Another type of jigger which is very suitable for the dyeing of sulphur dyestuffs is the *Padding Jigger* of Mather & Platt, Fig. 62. It consists of the dye-beck, usually made of cast-iron, with iron guide rollers. Two pairs of squeezing rollers, made of cast-iron or indiarubber, each from 6 inches to 8 inches in diameter, according to the width of the jigger, are fixed above the dye-beck. A strap batching arrangement and the usual catch boxes for reversing are also provided.

The *Under-water Jigger*, Fig. 63, of Messrs. C. G. Haubold jun. G.m.b.H., differs from the ordinary type in that the cloth is not wound direct upon the draw-rollers *a*, but upon rollers *b*, which rest upon them. The speed at which the pieces run is, therefore, a perfectly uniform one throughout the dyeing operation. The reversing motion is automatic. After the dyeing has been completed the rollers carrying the pieces can be readily lifted out of the dye-bath, and a new batch of cloth can be introduced.

The rollers *b*, upon which the cloth is wound, are suspended in vertical racks which are driven from wheels on a joint axle *d*. Uniform tension is obtained by means of the compensation roller *e*, which can be lifted above the surface of the dye-liquor in order to facilitate the changing of pieces. The dye-beck is made of wrought iron and suited for a batch of 850 mm. in diameter. Tension is put on the cloth, when entering, at *g*, and when leaving the machine it has to pass between the squeezing rollers *h*, the upper one of which is covered with rubber.

"Smothering" of the Sulphur Dyestuffs after Dyeing.

Some of the sulphur dyestuffs have to be developed after dyeing by allowing the dyed material to lie for some time in a warm, moist atmosphere. This process is termed "smothering." The different methods of smothering will be discussed under the application of the various dyestuffs.

Developing of the Sulphur Dyestuffs by Steaming.

A number of the sulphur dyestuffs, especially the blues, are developed after dyeing by steaming without pressure.

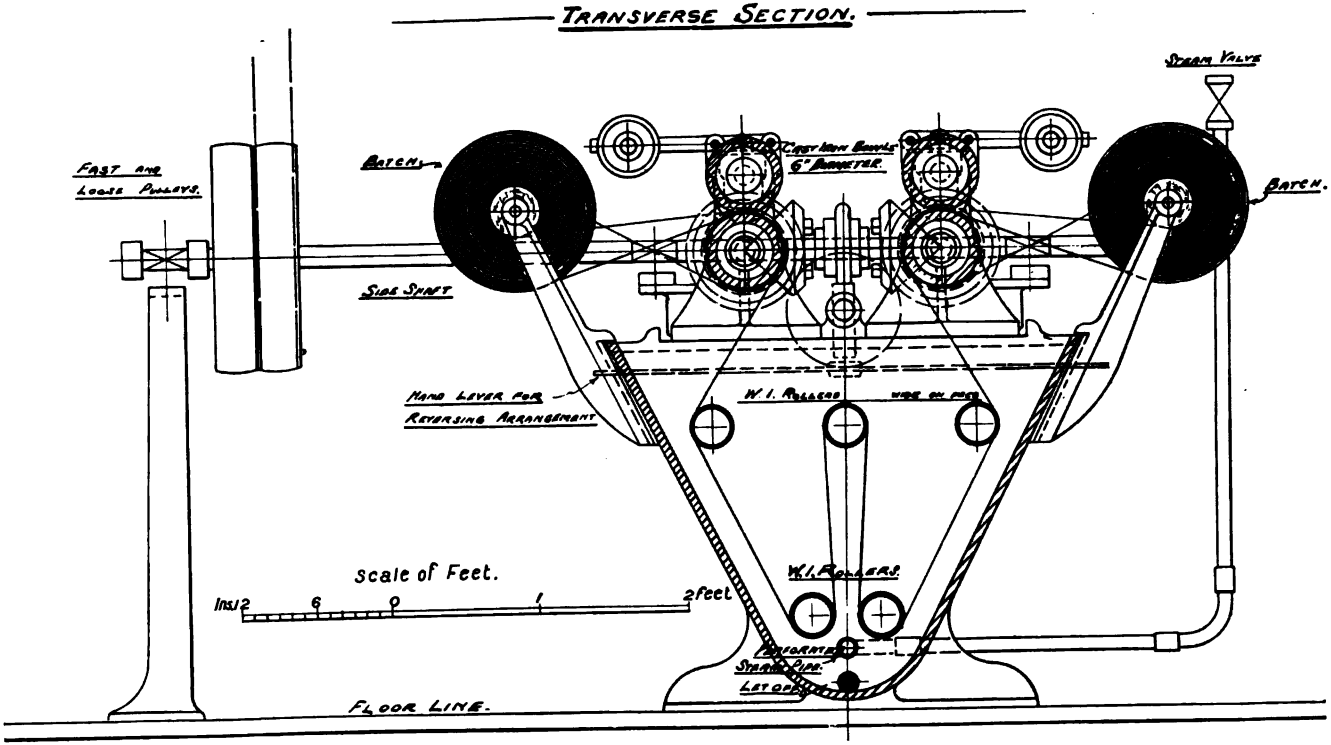

FIG. 62.—Padding Jigger.

Fig. 64 illustrates an arrangement which may be used for this purpose. It consists of a box which is provided with a false perforated bottom, covered with a coarse cotton cloth, under which the steam pipe enters. This should be carried round the inside of the vessel, and the holes in it should be placed at such an angle as to direct the steam against the bottom of the vessel. By means of an injector which is fitted to the steam pipe, a mixture of steam and air is passed into the vessel. The material is usually steamed for about half an hour at a temperature of 180° to 200° F. The yarn or the pieces are suspended on rods, but care must be taken that the material does

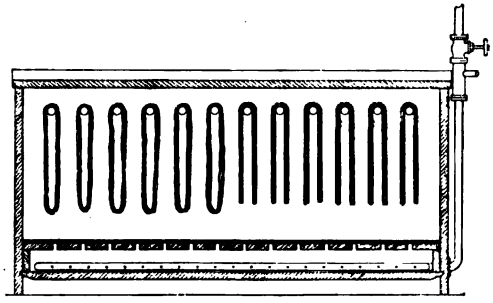

FIG. 64.—Arrangement for Developing the Sulphur Dyestuffs by Steaming.

not touch the bottom of the vessel. The vessel is covered with a roof-shaped lid, lined with coarse cotton cloth.

Cotton yarn may be steamed in apparatus such as are used for dyeing loose cotton or cops.

It is essential that the material should contain caustic soda and sodium sulphide when placed into the steaming box. If the cotton has been washed before steaming, a passage through a bath containing about 100 grains of caustic soda and 1 oz. of sodium sulphide per gallon is necessary.

Topping of the Sulphur Dyestuffs with Basic Dyestuffs.

The basic dyestuffs are very rapidly taken up by cotton which has been dyed with the sulphur dyestuffs. If basic dyestuffs are used in small quantities for the purpose of shading, they are best dyed from a cold soap bath. When larger quantities

are used, the addition of acetic acid or alum to the dye-bath is necessary.

Topping of Indigo with the Sulphur Dyestuffs.

Some of the sulphur dyestuffs, especially the blues, may be used as a "bottom" for indigo blue. On account of their superior fastness they are to be preferred to the ordinary substantive cotton dyestuffs.

After-treatments of the Sulphur Dyestuffs.

The fastness of a number of the sulphur dyestuffs may be considerably increased by an after-treatment with metallic salts, etc. The different methods will be fully discussed under the various dyestuffs.

Various after-treatments have been suggested, in order to prevent tendering of the cotton after dyeing with the sulphur dyestuffs. The best results have been obtained by a process suggested by G. E. Holden,[1] which consists in treating the dyed material with a 1 per cent. solution of tannic acid at a temperature of 40° C., squeezing or wringing, and then passing through lime-water, and finally washing. In place of lime-water any suitable salt of calcium, barium, or strontium may be used. It should, however, be stated that the shades are liable to be altered considerably.

A treatment with a 1 per cent. solution of soda ash will be found quite safe in many instances.

SPECIAL METHODS OF DYEING THE SULPHUR DYESTUFFS.

The Kryogene Dyestuffs of the Badische Anilin und Soda Fabrik.

Light shades should be dyed for 1 hour at 120° F. with the addition of 10 to 20 lbs. of common salt or Glauber's salt per 200 gallons of water, whilst dark shades and blacks require 50 to 60 lbs. of common salt or calcined Glauber's salt per 200 gallons of water. After dyeing, squeeze or wring, in order to save the dye-liquor.

[1] *Journ. Soc. Dyers and Colourists*, XXVI., p. 76, 1910.

The dyestuff solution for dyeing 100 lbs. of cotton is prepared in the following manner:—For the first four lots of material add one part of concentrated sodium sulphide, or two parts of sodium sulphide crystals to one part of dyestuff and dissolve in boiling water. Half this quantity of sodium sulphide will be sufficient for subsequent lots. 5½ lbs. of soda ash should be added to a fresh bath, ½ to 2 lbs. to an old bath. When using the concentrated Kryogene dyestuffs, twice the quantity of sodium sulphide stated above should be added.

In order to prevent uneven dyeing, the quantity of sodium sulphide may be increased, or 2 to 5 lbs. of Turkey-red oil may be added to the dye-bath.

Kryogene Blue B, BX, BN, BNO, Kryogene Black Blue BGT. BGTO, have to be developed by steaming or by smothering.

Kryogene Brown A may be dyed without the addition of either sodium sulphide or soda.

Shades dyed with 3 per cent. of *Kryogene Black TB, TG*, or with 5 per cent. of *Kryogene Blue B, BN*, or *Kryogene Black Blue BGT*, rinsed after dyeing, but not developed, may be used as a bottom for dark blues dyed in the indigo vat.

The following patented method of dyeing *Kryogene Black* in a *cold fermentation vat* is also of interest. The vat is filled with cold water (60 gallons) and then set with 8 lbs. of wheaten, or potato flour, 6 lbs. bran, 2 lbs. syrup or honey (or 4 lbs. of dates, raisins, grapes, etc.), and 5 lbs. soda crystals (or 2 lbs. soda ash or pearl ash).

For dyeing a full black, 5 to 7 lbs. of *Kryogene Black TBO* or *TGO*, and for a bronzy brownish-black 10 lbs. of *Kryogene Black TGO*, per 100 gallons of dye-liquor should be added.

The following additions must be made to the vat from time to time: 3 lbs. dyestuffs, ½ lb. flour, ½ lb. bran, and ½ lb. syrup.

After from 3 to 4 days the vat will be perfectly clear, of a greenish colour, and in the proper condition for use. Soda ash must be added as required. The liquor in the vat should always produce a red colouration on phenolphthaleïne paper. The dye-bath must be used as "short" as possible.

The Sulphur Dyestuffs of the Berlin Aniline Company.

When dyeing cops or cheeses in special dyeing machines the proportion of cotton to dye-liquor should be from 1 : 5 to 1 : 10,

whilst for dyeing loose cotton in an ordinary dye-vessel, or for dyeing yarn, it should be from 1 : 20 to 1 : 30.

Sulphur Blacks.—Make the dyestuff into a paste with water and caustic soda lye, add the sodium sulphide and boiling water, stir well, and boil for a short time.

In preparing the dye-bath, add first the soda ash, boil for a short time, then add the dyestuff solution (6 to 12 per cent., calculated on the weight of cotton), and finally the Glauber's salt and the caustic soda lye.

Additions.—Sodium sulphide crystals:—When dyeing in open vessels, jiggers, etc., 4 times the weight of dyestuff used. When dyeing cops, etc., in machines, 2½ to 4 times the weight of dyestuff used. Glauber's salt, or common salt:—For a concentrated bath, 20 to 50 lbs. per 100 gallons; for a more dilute bath, 5 lbs. per 100 gallons. Soda ash:—5 lbs. per 100 gallons. Caustic soda lye (76° Tw.):—$\frac{1}{10}$ the quantity of dyestuff used.

When dyeing loose cotton, cops, or cheeses, it is advisable to add 1½ gills of Turkey-red oil per 100 gallons of dye-liquor.

The dye-bath should stand at 9° to 10° Tw., at 60° F. It is advisable to employ closed steam pipes in place of live steam for heating the bath. The temperature should not fall below 195° F., and it is best to allow the material to come as little as possible into contact with the air during dyeing. The cotton must be well squeezed or wrung and thoroughly rinsed immediately after dyeing. Hard water should be boiled with soap and the lime soap formed should be carefully removed.

When dyeing further quantities of material in a standing bath only half the quantity of sodium sulphide, and ⅕ oz. of soda, per gallon of water added to the dye-bath, is required. Glauber's salt or common salt should only be added when the specific gravity of the dye-bath is below 9° to 10° Tw., at 60° F.

The following methods of after-treatment are recommended for the *Sulphur Blacks:*

The material is treated after dyeing for about ½ hour:—(*a*) with 2 to 3 lbs. of soap per 100 gallons; temperature 200° F. (*b*) 2 per cent. of soap and 1 per cent. of olive oil; temperature 140° F. (*c*) 2 per cent. of soap and 3 per cent. of Turkey-red oil; temperature 140° F. (*d*) 1 per cent. of soda ash and 1½ per cent. of olive oil; temperature 140° F. (*e*) 1 per cent. of starch and 1 per cent. of pressed lard; temperature 120° F.

(*f*) 3 per cent. of potassium bichromate and 5 per cent. of caustic soda; temperature 160° F.

Sulphur Browns.—The Sulphur Browns are soluble in water and can be dyed without the usual additions to the dye-bath. It is, however, better to add 5 per cent. of soda ash, sodium sulphide crystals, an equal quantity to that of dyestuff used, and common salt or Glauber's salt, 10 to 30 lbs. per 100 gallons of dye-liquor.

Darker shades are obtained when the dyed material is exposed to the air for about 1 hour. The cotton should finally be rinsed in warm water to which 2 to 3 per cent. of soda ash has been added.

The fastness to washing of *Sulphur Catechu* and *Sulphur Corinth* may be improved by an after-treatment for ½ hour in a cold bath containing 3 to 5 per cent. sulphate of zinc, and 3 to 5 per cent. acetate of soda.

The fastness to light of the same dyestuffs is increased by treating them for ½ hour at the boil with 1 to 2 per cent. of potassium bichromate, 1 to 2 per cent. of copper sulphate, and 3 per cent. of acetic acid (30 per cent.).

Sulphur Blue L Extra.—The dyestuff is dissolved with the addition of three times its weight of sodium sulphide crystals (twice its weight for a standing bath), and 10 per cent. of caustic soda (calculated on the weight of the dyestuff). 5 lbs. of soda ash are added to the boiling dye-bath (100 gallons). The dyestuff, which has been dissolved previously, and afterwards 5 to 30 lbs. of Glauber's salt or common salt, are added, the bath is boiled up and the steam turned off. The temperature of the dye-bath should not be allowed to fall below 180° F. during dyeing. After working the material for about 1 hour, it is squeezed or hydroextracted. In order to fully develop shades dyed with Sulphur Blue L Extra, oxidising after dyeing is necessary.

Sulphur Indigo Blue.—This dyestuff is chiefly used for dyeing cops and yarn according to the method given above for Sulphur Blue. The temperature of the dye-bath during dyeing should be from 200° to 205° F. After dyeing, the yarn is squeezed and immediately rinsed 2 or 3 times in cold water.

After-treatment:—The dyed hanks are turned a few times in a boiling bath containing 5 per cent. of acetic acid and 1 per

cent. potassium bichromate. 5 per cent. of copper sulphate is now added, and the yarn worked for ½ hour. Rinse in water, and finally in water with the addition of 3 per cent. of soda ash, wring or hydroextract and dry.

In place of this after-treatment, Sulphur Indigo dyeings may be developed by steaming.

Loose cotton dyed with this dyestuff does not require to be steamed. It is sufficient to place the material directly from the dye-bath in a heap, to cover it, and to allow it to lie overnight; or it may be placed into baskets lined with waterproof paper, overnight.

The Katigen Dyestuffs of the Bayer Company.

In dissolving, equal parts of dyestuff and of sodium sulphide should be used. According to the hardness of the water employed in dyeing and to the depth of shade required, add 2 to 8 per cent. of soda ash to the dye-bath, boil up, skim off, if necessary, add the dyestuff solution, boil up, and finally add 10 to 60 per cent. of Glauber's salt or 5 to 30 per cent. of common salt.

Katigen Indigo should be dyed with the addition of an amount of glucose equal to that of dyestuff used. For the dyeing of subsequent lots of material the quantities of dyestuff, sodium sulphide, and glucose may be reduced by 40 per cent.

The quantities of Glauber's salt and soda added must be in proportion to the amount of water which it is necessary to add in order to replace the loss of liquor caused during dyeing and by the removal of the material.

The correct shades of *Katigen Chrome Blue 5G* and *2R* and of *Katigen Chrome Brown 5G* are obtained by treating the goods after dyeing for ½ hour, at 200° F., in a bath containing 2 to 3 per cent. of potassium bichromate, 2 to 3 per cent. of copper sulphate and 3 to 5 per cent. of acetic acid.

The fastness to washing, boiling and to light of the other Katigen dyestuffs is also increased by this after-treatment.

If it is more particularly desired to improve the fastness to light, *e.g.*, in the case of khaki shades on piecegoods, it is advisable to somewhat decrease the amount of bichrome and to increase the amount of copper sulphate, if necessary, to 4 per cent.

to obtain very brilliant shades of black, the goods should be after-treated for ½ hour, at 100° to 120° F., with 2 per cent. bichrome, 2 per cent. copper sulphate, 4 per cent. acetic acid, and finally rinsed and soaped.

The caseine solution is prepared in the following manner :—Stir the caseine into a paste with a small quantity of water. According to the concentration of the solution required, add 1 to 2 gallons of cold water, heat to 160° to 175° F., and then add 50 to 70 c.c. of ammonia. Decomposition of the solution may be prevented by the addition of 5 c.c. of formaldehyde (40 per cent.) for every pound of caseine used.

If coloured effects are required, the silk is afterwards dyed with acid dyestuffs, or is dyed previous to the weaving with dyestuffs which are not affected by the process of mercerising, by souring and by dyeing with the Katigen dyestuffs.

Dyeing Cotton Piecegoods with Worsted Borders or Woven Worsted Effects.

The following method is recommended for dyeing *Katigen Blacks* on cotton piecegoods, leaving the woollen selvedges or effects white. For five pieces, weight 80 lbs. :—The cloth is scoured at the boil before dyeing in the ordinary manner with a small quantity of soap, given three ends in the jigger, at the boil, in a solution of formaldehyde (1 lb. per 10 gallons of water) and acetic acid (1 lb. per 10 gallons of water), and finally rinsed twice in cold water. The dye-bath is prepared with 12 lbs. *Katigen Black TW extra*, 6 lbs. concentrated sodium sulphide, 12 lbs. *Katigen Intensifier* (dissolved separately in boiling water), and ¾ lb. Monopole soap C.

The dyestuff and the sodium sulphide are dissolved together, and added at the first two ends. The solution of the Intensifier is added in the same manner. An addition of 5 lbs. of Glauber's salt is made at the third and fourth end. The pieces are given four ends cold; they are then batched and passed through the water mangle. Care should be taken that there are no marks on the bowls of the mangle. The cloth is finally thoroughly washed in cold water and dried. Brighter blacks are obtained by using 10 lbs. *Katigen Black 2B extra* in place of the *TW extra*.

The Immedial Dyestuffs of Leopold Cassella & Company.

Dissolving of the Immedial Dyestuffs.—Parts of sodium sulphide crystals (or half the quantity of sulphide concentrated) which are required for dissolving one part of dyestuff:—$\frac{3}{4}$ parts for *Blacks;* 1 part for *Blacks conc.* and for *Brilliant Blacks;* $1\frac{3}{4}$ to 2 parts for *Carbons* and *Brilliant Carbons;* $\frac{1}{2}$ to 1 part for *Violet* and *Purple;* 2 parts for *Direct Blues conc.* and for *Indones;* $1\frac{1}{2}$ to 2 parts for *Indogene* and *New Blue;* $\frac{1}{2}$ part for *Sky Blue paste;* 1 part for all the other *Immedial dyestuffs.*

Additions to the dye-bath:—

	First Bath. Lbs. per 10 gallons Liquor.	Second Bath. Per cent.
Soda ash	4·5—8	0·2—0·5
Common salt or desiccated Glauber's salt	1—2	0—5
Glucose (for *Immedial Indone*) . .	10—16	0·2—0·5
Caustic soda lye (77° Tw.), (for *Immedial New Blue*) . . .	$1\frac{1}{2}$—3 ozs.	0·1—0·2
Turkey-red oil (for *Immedial Sky Blue*)	$1\frac{1}{2}$ ozs.	0·5

After-treatments.

The material, having been well rinsed after dyeing, may be after-treated for 20 to 30 minutes in a boiling bath containing 3 per cent. of potassium bichromate and 3 to 5 per cent. of acetic acid; or 2 to 3 per cent. of potassium bichromate, 1·5 to 2 per cent. of chrome alum, and 3 to 5 per cent. acetic acid; or 1·5 to 2 per cent. potassium bichromate, 1·5 to 2 per cent. of copper sulphate, and 3 to 5 per cent. of acetic acid.

Cotton dyed with *Immedial Blacks,* which is used for warps in union goods, should be after-treated both immediately after dyeing with the sulphur dyestuff and after the wool has been dyed with acid dyestuffs, in a hot bath containing $4\frac{1}{2}$ to 8 ozs. of acetate of soda, or 3 to 4 ozs. of formate of soda per 10 gallons of liquor. These ingredients may either be added to the last rinsing bath, or, if the goods are sized or finished, they may be added to the size or the finishing paste.

Developing of Immedial Blue with Sodium Peroxide or Hydrogen Peroxide.

In place of developing by steaming, *Immedial Blue* may be developed by means of an after-treatment with either sodium or hydrogen peroxide. Steaming is, however, less expensive. For heavy shades the developing bath should contain 1½ per cent. sodium peroxide, and 1½ per cent. sulphuric acid, 168° Tw. A wooden dye-beck is best suited for this treatment. Add the acid first, enter the cotton into the cold bath, work for a short time, lift out, add the sodium peroxide previously dissolved in cold water, enter the cotton, work for about 15 minutes, then heat to 140° F., during 20 minutes. The cotton is finally rinsed and treated in a hot soap bath. The developing bath should react slightly alkaline. If hydrogen peroxide is employed, 20 to 25 per cent. with the addition of 2 to 2½ per cent. of ammonia should be used.

Developing of Immedial Indone, Immedial Indogene and Immedial Direct Blue, with Immedial Developer.

Immedial Developer may be used in place of sodium or hydrogen peroxide. It is non-explosive and exceedingly stable. A small quantity of the developer may be added to the last rinsing bath; the colours are thereby brightened and oxidised more rapidly. This is of special advantage in dyeing cops and cheeses, etc., in machines.

The cotton is dyed in the usual manner and rinsed. To the last rinsing bath, which is heated to 105° to 120° F., 0·2 to 0·5 per cent. (calculated on the weight of cotton) of Immedial Developer, previously dissolved in water at 105° to 120° F., is added, the cotton worked in the bath for about 20 minutes, hydroextracted and dried.

Developing of Immedial Blue and New Blue, with Immedial Developer.

Developing of these dyestuffs by smothering or steaming is certainly the cheapest method, but in some instances Immedial Developer may be used to advantage. The cotton is rinsed immediately after dyeing. The last rinsing bath is heated to

105° to 120° F.; 1 to 1½ per cent. of the developer, previously dissolved in warm water, is added, the goods are entered, and the temperature of the bath is gradually raised to boiling point. Altogether, the cotton is treated in the bath for about ½ hour. It is finally rinsed.

Indo Carbon S and SF Pat.

The *Indo Carbons* are sulphur dyestuffs, but they are also suitable for dyeing in the *hydrosulphite vat.* They are not affected by acid cross-dyeing or by hot stoving, and an after-treatment with acetate of soda or with acetic or formic acid is, therefore, not required when cotton warps dyed with these dyestuffs are used in union goods, in which the wool has to be dyed with the addition of sulphuric acid or bisulphate of soda.

The goods are dyed for about 1 hour near boiling temperature in a bath containing:—

	Starting bath.		Standing bath.	
Dyestuff . . .	8–14 %	calculated on the weight of the goods.	5–9 %	calculated on the weight of the goods.
Sodium sulphide cryst.	16–28 %		10–18 %	
Soda ash . . .	4–8 ozs.	per 10 gallons liquor.	0·2–0·5 %	
Desiccated Glauber's salt or common salt	1–3 lbs.		0–5 %	

Deeper shades are obtained by after-treating the dyed material with 3 to 4 per cent. of bichrome in the usual manner.

Dyeing of Loose Cotton.

Loose cotton dyed with *Immedial Blue* or *New Blue* is hydro-extracted immediately after dyeing and placed into baskets, in which it is allowed to smother for some hours.

Dyeing of Cotton Yarn.

Cotton yarn is best dyed at the boil for ¾ to 1 hour in ordinary dye-becks made of wood or iron. Bent sticks should be used.

Immedial Indone has to be dyed at a somewhat lower temperature. The yarn should be squeezed, wrung, and exposed to the air for ½ to 1 hour after dyeing and before it is rinsed.

Immedial Blue and *New Blue* should be developed by

steaming or smothering after the yarn has been freed from excess of liquor by squeezing.

For the purpose of developing by smothering, the squeezed hanks, whilst still hot, are placed into baskets lined with waterproof paper, or into well covered boxes, in which they are left for some hours in a heated room.

Dyeing of Cops and Cheeses in Special Machines.

Machines in which the dye-liquor is forced through the cops by means of pressure are not to be recommended. The liquor ought to be sucked through the material, and provision ought to be made for removing the excess of liquor by means of suction when the dyeing has been completed and before the material is rinsed.

Cops or cheeses which have been dyed in machines belonging to the "packing system" (solid skewer system) should be hydroextracted after dyeing.

The Blues have to be developed either by smothering or by steaming with a mixture of steam and air. The latter operation may be carried out in the cop-dyeing machine.

Dyeing of Cotton Piecegoods.

A few examples of dyeing Immedial dyestuffs in the jigger, which have been taken from practice, are illustrated in the table on p. 250.

Dyeing of Immedial Dyestuffs in Continuous Dyeing Machines.

When dyeing large quantities of cloth with sulphur dyestuffs, especially blacks, a *Continuous Dyeing Machine* may be used with advantage. The machine, which is illustrated in Fig. 65, consists of a large square box, divided into two compartments by means of a perforated wooden partition. The cloth is passed through the two boxes in the open width; it is guided by rollers which are carried by an iron framework which may be lifted out of the machine. A similar arrangement is described for dyeing cotton warps in the indigo vat. From the dye-becks the cloth passes immediately into two or three compartments in which it is thoroughly rinsed. In passing from one

	Description of Material.	Dye-liquor. Galls.	Dyestuff. Lbs.		Sodium sulphide crystals. Lbs.		Soda ash. Lbs.		Common salt or desiccated Glauber's salt. Lbs.		Glucose. Lbs.		Turkey-red Oil. Lbs.		Caustic soda lye, 77° Tw.		
			I.	II.	I.	II.	I.	II.	I.	II.	I.	II.					
Black with Im. Black NNG conc.	Sateen, 5 pieces, 45 lbs.	22	7¼	2⅞	7¼	2⅞	1	0·1 to 0·2	6½	1							6 to 8 ends boiling; add one-half of the ingredients at the beginning, the other half after the first end. To the last rinsing bath 4½ to 8 ozs. of acetate or formate of soda should be added.
Black with Im. Black NNG conc.	Moleskin, 5 pieces, 330 lbs.	45	30	21	30	21	2	½	12	2							
Blue with Im. Direct Blue B extra conc., or Im. Indogene.	Twill, 5 pieces, 45 lbs.	22	1 to 3¾	⅔ to 2¼	3 to 7½	1⅓ to 4½	0·6 to 1	0·1 to 0·2	1 to 4	0·2 to 0·9							4 to 8 ends, boiling.
Blue with Im. Direct Blue B extra conc., or Im. Indogene.	Moleskin, 5 pieces, 330 lbs.	45	5·1 to 19½	5 to 16½	15 to 39	10 to 33	1·3 to 2	0·4 to 1	2 to 9	0·4 to 2							
Blue with Im. Indone R conc.	Sateen, 5 pieces, 44 lbs.	22	1¾ to 7	⅞ to 3½	5¼ to 14	1¾ to 7	⅔ to 1	0·1 to 0·2	1 to 4	0·2 to 1	1¾ to 7	0·2 to 0·9	⅔ to 1	0·1 to 0·2			After dyeing and squeezing, the cloth should be exposed to the air by passing it over rollers.
Blue with Im. Blue CR extra conc. or Im. New Blue.	Sateen, 5 pieces, 44 lbs.	22	1⅓ to 4⅞	⅞ to 2⅝	4 to 9¾	1¾ to 5¼			1 to 4½	0·2 to 1					0·3 to 0·6	0·04 to 0·1	Previous to rinsing, the colour should be developed by steaming or by smothering.

compartment into the next, the cloth is squeezed by means of heavy squeezing rollers. The goods are finally washed in an open-width washing machine or in an open soaper provided with beaters. (The illustration has been taken from *Die Baumwollfärberei*, L. Cassella & Co.)

Before drying, the goods may be treated with a solution of acetate or formate of soda (4 to 8 ozs. per 10 gallons of water), or they may be chromed and coppered. The methods have already been described.

Immedial Blues and *Immedial New Blue* have to be developed by steaming or smothering. Any ordinary type of steaming plant or steam-chest may be used for this purpose, but it is

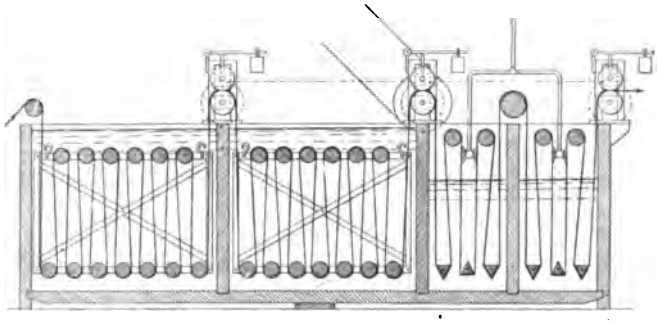

FIG. 65.—Continuous Dyeing Machine for Dyeing with the Sulphur Dyestuffs.

essential to inject air along with the steam. The goods should be steamed for from 20 to 30 minutes.

For the purpose of smothering, the pieces are squeezed after dyeing, exposed to the air for a short time, and batched. The batches of cloth are then wrapped into a moist cotton cloth, or covered with waterproof paper. They are then placed, for some hours, or preferably overnight, into a room which is heated to a temperature of about 140° F. The operation is finished by rinsing the goods in hot water.

For dyeing *Immedial Black NNG conc.*, the following proportions should be used:—Under I. the additions per 10 gallons of liquor are given, whilst under II. are given the percentages (calculated on the weight of material passing through the

machine) of the ingredients which have to be added during the passage of the pieces through the machine.

	I.	II.
Dyestuff	2—2½ lbs.	5·5—6·5 %
Sodium sulphide crystals. . .	2—2½ lbs.	5·5—6·5 %
Turkey-red oil	1½—3 ozs.	0·5 %
Soda ash	4½—8 ozs.	0·5 %
Common salt or desiccated Glauber's salt	2 —2½ lbs.	1—2 %

The concentration of the dye-bath has to be kept uniform during dyeing.

Dyeing of Sulphur Dyestuffs in the Padding Machine.

Sulphur dyestuffs may also be conveniently dyed by padding. The following quantities of dyestuff, etc., should be used per 10 gallons of padding liquor: 3 to 10 ozs. for light shades; 1 to 3 lbs. for medium shades; 3 to 6 lbs. for heavy shades; 8 to 10 lbs. of *Immedial Black conc.*, for blacks.

Sodium sulphide crystals, twice the quantity of that of dyestuff used. 3 ozs. Turkey-red oil, 8 ozs. of dextrine, and 8 ozs. Glauber's salt, should be used in addition when dyeing blacks.

The Turkey-red oil must be added last. A single passage of the pieces through the padding machine will be sufficient for mercerised goods and for light shades, whilst two passages have to be given for heavy shades and for blacks. The goods are thoroughly rinsed after dyeing, and finished in the manner already described.

A special method for dyeing large quantities of cotton piece-goods with *Immedial Blacks* and *Blues* which is practised in some countries, consists in spraying a concentrated, hot dyestuff solution on the cloth. For this purpose a padding machine is used and the goods may or may not be given a passage, before the spraying, through a shallow box containing dyestuff solution. After spraying, the cloth is passed through squeezing rollers; it is then slightly rinsed and immediately dried. Shades produced by this method of dyeing are, however, not very fast to washing.

The Pyrogene Dyestuffs of the Society of Chemical Industry, Basle.

The Pyrogene dyestuffs are dissolved in the usual manner with the addition of sodium sulphide. The dye-bath for 100 lbs. of cotton is made up as follows: 150 to 200 gallons of water; 5 to 10 lbs. of dyestuff; 7½ to 10 lbs. (¾ oz. per gallon) of sodium sulphide crystals; 7½ to 10 lbs. (¾ oz. per gallon) of soda; 15 to 60 lbs. (1½ to 5 ozs. per gallon) of common salt. Dye at a temperature of 158° to 194° F. Glauber's salt should be used in place of common salt in cop-dyeing. The specific gravity of the cold dye-liquor should be 7° to 10° Tw.,for blacks, and 5° to 6° Tw., for blues.

An after-treatment with metallic salts, for ½ hour, at 140° to 160° F., is recommended for *Pyrogene Black G, GN* and *B*. The following quantities, calculated on the weight of cotton, should be used: 3 per cent. of potassium bichromate and 3 per cent. of acetic acid (12° Tw.), for reddish blacks; 3 per cent. of copper sulphate and 3 per cent. of acetic acid (12° Tw.), for blueish blacks; 3 per cent. of chrome alum and 3 per cent. of acetic acid (12° Tw.), for greenish blacks (Aniline black shade).

The following proportions may also be used: 1½ per cent. of potassium bichromate, 1½ per cent. of copper sulphate, and 3 per cent. of acetic acid (12° Tw.); or 1½ per cent. of potassium bichromate, 1½ per cent. of chrome alum, and 3 per cent. of acetic acid (12° Tw.).

The shade of goods which have been after-treated with metallic salts in the manner described may be still further improved by treating them for about ½ hour, at 158° to 176° F., in a bath containing 1½ to 3 per cent. of potato starch, and 1 to 2 per cent. of tallow, lard, or cocoa-nut oil. In some instances the process may be simplified by adding the above ingredients to the bath in which the goods are after-treated with metallic salts.

The treatment with starch and tallow may be replaced by soaping at 140° F., with the addition of a small quantity of soda ash.

Dyeing of Cotton Warps.

Cotton warps are given two to four passages at the boil, through a bath containing per 10 gallons: 2 to 2½ lbs. *Pyrogene*

Black, $\frac{3}{4}$ lb. sodium sulphide, $\frac{1}{4}$ to $\frac{1}{2}$ lb. soda ash, $2\frac{1}{2}$ to $3\frac{1}{2}$ lbs. common salt.

Dyeing of Cotton Piecegoods.

Piecegoods are dyed in a jigger provided with squeezing rollers by giving 6 to 8 ends just below the boil. A second jigger should be provided for rinsing and for the after-treatment, if required.

For 100 lbs. of cloth: 30 gallons of water, 13 to 17 lbs. of dyestuff, $2\frac{1}{2}$ to 3 lbs. of sodium sulphide crystals, $\frac{3}{4}$ lb. soda ash, $4\frac{1}{2}$ lbs. dextrine, 9 to $13\frac{1}{2}$ lbs. of common salt.

Dyeing of Piecegoods in the Continuous Open-Width Dyeing Machine.

The goods are dyed in from 3 to 5 minutes just below the boil. The first bath is prepared as follows: 2 to $2\frac{1}{2}$ lbs. *Pyrogene Black*, $\frac{3}{4}$ to 1 lb. sodium sulphide, $\frac{1}{2}$ to $1\frac{1}{4}$ lbs. soda ash, and $\frac{1}{2}$ to $2\frac{1}{2}$ lbs. of common salt.

The following additions (calculated on the weight of material) have to be made during dyeing: 8 to 11 per cent. of Pyrogene Black, $2\frac{3}{4}$ to 4 per cent. of sodium sulphide crystals, 1 to 2 per cent. of soda ash, 1 to $2\frac{1}{2}$ per cent. of common salt.

Dyeing in the Padding Machine.

An ordinary padding machine provided with a pair of squeezing rollers, a large trough of 20 to 30 gallons capacity, the necessary guide rollers and a closed iron steam-coil, may be used for this purpose.

The goods are given two to four ends. The temperature of the padding liquor should be 176° to 194° F. The end of the pieces which passes last during the first passage, should enter first at the second passage.

Additions per 100 gallons of padding liquor: 2 to 3 lbs. of *Pyrogene Black*, $\frac{3}{4}$ lb. of sodium sulphide crystals, $\frac{1}{4}$ lb. Turkey-red oil, $1\frac{1}{2}$ to 2 lbs. common salt, and 1 to $1\frac{1}{2}$ lbs. of dextrine.

Additions to be made during padding (calculated on the weight of cloth): 8 to 11 per cent. of Pyrogene Black, 2 to $3\frac{1}{2}$ per cent. of sodium sulphide crystals, $\frac{1}{2}$ to 1 per cent. of Turkey-red oil, 1 to 3 per cent. of common salt, and 2 per cent. of dextrine.

Dyeing of Cotton Yarn with the Thiophenol Blacks.

Cotton yarn is dyed for 1 to 1¼ hours at 158° to 194° F. The specific gravity of the cold dye-bath should be 10° to 12° Tw.

For 100 lbs. of cotton yarn: 160 to 200 gallons of water, 10 lbs. of dyestuff, 25 lbs. of sodium sulphide crystals, 8 to 10 lbs. of soda ash, 48 to 60 lbs. of common salt, or 80 to 100 lbs. of calcined Glauber's salt. An addition of 2 per cent. of oil or lard and ½ per cent. of soap to the last wash water improves the shade.

Washing for ½ hour in the following bath is also recommended:—For 100 lbs. of cotton yarn: 180 to 200 gallons of water, 1 lb. of cotton-seed or cocoa-nut oil, 1½ to 2 lbs. of soap, ½ lb. of starch; wring or squeeze and dry. For cotton warps ½ lb. of glue should be added.

Pyrogene Blues.

Shades dyed with the Pyrogene Blues have to be developed by steaming, by smothering, or by a passage through a solution of sodium hypochlorite.

In order to develop the blues in sodium hypochlorite the goods are treated for ½ to ¾ hour in a bath containing per 10 gallons: 1½ to 2 pints sodium hypochlorite, and 1 to 1¼ pints of caustic soda lye, 76° Tw. 1½ to 2 pints of bleaching powder solution, 12° Tw. may be used in place of the sodium hypochlorite.

After this treatment the goods should be thoroughly rinsed and finally soaped or passed through a weak soda solution.

Preparation of 100 gallons of sodium hypochlorite solution:

A.—65 lbs. bleaching powder (33 per cent.), 25 gallons water.

B.—18 lbs. soda ash dissolved in 10 gallons hot water and mixed with 10 gallons cold water. Mix *A* and *B*, stir and allow to settle, decant and wash the precipitate twice.

A special method has been patented by the Society of Chemical Industry in Basle, in which *oil of turpentine* is employed. The goods are dyed for one hour at 158° to 194° F., wrung or squeezed and immediately developed.

For 100 lbs. of cotton: 150 to 200 galls. of water, 4 to 15 lbs. of dyestuff, 6 to 10 lbs. of sodium sulphide crystals, 2½ to 4 pints of caustic soda lye (76° Tw.), ½ to 1 pint oil of turpentine, 3 to

7½ lbs. soda ash, and 7 to 20 lbs. common salt. An Aniline black ager may be used for developing, or the goods may be placed in a heap, covered, and allowed to lie in a warm room overnight.

Piecegoods may be passed a few times through the Mather-Platt, or they may be steamed in the presence of air in an ordinary steam-chest. If the developing is carried out in a wooden box into which a mixture of steam and air is forced, the oil of turpentine may be omitted from the dye-bath. In this case the end of the pipe through which the air is injected should be funnel-shaped. Cotton-wool, impregnated with oil of turpentine, is held in position by means of a wire-gauze in the narrow part of the funnel. The air passing through the cotton-wool carries a certain amount of turpentine vapour into the box.

After developing, the goods are rinsed in hot water, either with or without the addition of soda, finally rinsed in cold water and dried.

Dyeing of Cotton Warps.

Cotton warps are given two to four ends and the shade is developed as described above.

Additions per 10 gallons of liquor: ¾ to 1½ lbs. of *Pyrogene Blue R*, ½ to 1 lb. of sodium sulphide crystals, 2 to 4 ozs. soda ash, ½ to 1¼ lbs. of common salt. If the shade is developed by smothering, add ¼ to ½ pint of caustic soda lye, 76° Tw., and up to 1 oz. of oil of turpentine.

Dyeing of Cops and Cheeses.

When dyeing cops or cheeses in special machines ⅛ to ¼ pint of Turkey-red oil per 10 gallons of liquor should be added.

Dyeing of Piecegoods in the Jigger.

Additions per 10 gallons of liquor: ½ to 1 lb. of sodium sulphide crystals, ¼ to ½ pint of caustic soda lye (76° Tw.), 0 to $\frac{1}{16}$ pint of oil of turpentine, ½ to ¾ lb. of soda ash, ½ to 1¼ lbs. of common salt, and the necessary quantity of dyestuff.

Dyeing in the Padding Machine.

Additions per 10 gallons of liquor: ¾ to 1½ lbs. *Pyrogene Blue*, ½ to 1 lb. sodium sulphide crystals, ¼ to ½ lb. soda ash, ½ to 1½ lbs.

common salt, ½ to ⅝ pints caustic soda lye, 76° Tw., 0 to $\frac{1}{16}$ pint oil of turpentine.

The other Pyrogene dyestuffs are applied according to the instructions given for blacks.

Pyrogene Olive N and *Pyrogene Yellow M* may be diazotised after dyeing, and developed with beta-naphthol.

The former gives a reddish-brown shade, the latter a Bordeaux.

The greenish-yellow shades produced by dyeing with Pyrogene Yellow M may be converted into useful orange-yellows by an after-treatment in a solution of bleaching powder (1° to 3° Tw.).

The Sulphurol Dyestuffs of Wuelfing, Dahl & Co.

The *Sulphurol dyestuffs* are dyed near the boil for 1 to 1½ hours. The material is squeezed after dyeing, rinsed once in lukewarm, and twice in cold water. The following proportions should be used for dyeing heavy shades :—

	Starting bath. Per cent.	Standing bath. Per cent.
Dyestuff	10—15	6½—9
Sodium sulphide crystals . .	10—15	6½—9
Soda ash	5	2
Common salt, or Glauber's salt .	30—50	4 —6

Sulphurol Indigo B and R conc.—One part of dyestuff is dissolved in 15 parts of water with the addition of 1½ parts of sodium sulphide crystals and 1 part of glucose. Heat the dye-bath to about 158° F., add 5 per cent. of soda ash, and finally add the dyestuff solution. Dye for about 1 hour at 140° F., squeeze and wash immediately.

The Eclipse Dyestuffs of Aniline Colour and Extract Works, formerly John R. Geigy.

The *Eclipse dyestuffs* are dissolved in the following manner: 2½ gallons of water are necessary to dissolve 1 lb. of dyestuff. Twice this quantity of water is necessary for dissolving *Eclipse Green, Fast Green, Blue,* and *Dark Blue.*

The following quantities of sodium sulphide crystals and of soda ash are required for dissolving 1 lb. of dyestuff:—

	Sodium sulphide crystals. Lbs.	Soda ash. Lbs.
Yellow 3 G, G, and R conc.; Phosphine GG conc.	4	1
Yellow G, R, 3G; Phosphine GG; Fast Brown RR., RV, B, V; Fast Red Brown conc.; Fast Dark Brown conc.; Fast Bronze conc.; Fast Olive conc.; Violet R conc.	3	1
Fast Phosphine RR conc.; Fast Brown 3G, G; Brown V; Red Brown conc.; Blue B conc.; Fast Dark Blue; Violet R extra; Black H	2	1
Fast Green G conc., 3G conc.	2	2
Blue B; Green G	1	1
Phosphine RR conc., R extra conc.; Olive; Bronze; Brown B, G, G extra, 3G, RV extra, RR extra, R; Dark Brown B.	½	¼

The material is dyed at the boil for 1 hour, with the addition of 10 to 50 per cent. of Glauber's salt.

Eclipse Blue B and *R conc.*, and *Eclipse Fast Dark Blue* give the best results when dyed from a cold bath.

The *Eclipse Fast Colours* are free from sodium sulphide, and they are, therefore, not hygroscopic.

The Eclipse dyestuffs may be after-treated for ½ hour, at 158° to 195° F. with either 1 to 1½ per cent. of bichrome, 1 to 1½ per cent. of copper sulphate, and 2 per cent. of acetic acid; or with 1 to 2 per cent. of bichrome, and 1 per cent. of sulphuric acid. 1 oz. of soda or of sodium acetate should be added per gallon of water used as the last rinsing bath.

The Cross-Dye Dyestuffs of Read Holliday & Sons.

In dyeing with the *Cross-Dye dyestuffs* care must be taken to use the proper amount of sodium sulphide. If too large a proportion is used the dyestuff will not dye to the proper depth of shade, whilst if too little sulphide is employed the dyestuffs will become precipitated in the bath and the dyed material will be liable to rub.

The dye-bath should not register more than 8° to 12° Tw. In a

fresh bath the proportion of dyestuff to salt should be 1 : 10, whilst in a standing bath 20 to 25 per cent. of salt will be sufficient. Equal quantities of dyestuff and of sodium sulphide should be used.

Dyeing of Loose Cotton.

	First bath. Per cent.	Standing bath. Per cent.
Cross-Dye Black BX, RX	15	10
Sodium sulphide conc.	15—30	10
Soda ash	5	2
Salt	75	25

Dyeing of Cotton Warps.

Cotton warps should be boiled out before dyeing in a four-box boiling machine, the first box containing cold caustic soda lye, 10° to 15° Tw., the second and third box boiling water, the fourth a continuous supply of cold water.

For dyeing, the boxes are charged with: 2 lbs. *Cross-Dye Black*, 2 lbs. sodium sulphide conc., ½ lb. soda ash, 1½ lbs. common salt, per 10 gallons of liquor.

Subsequent dyeings require: 6 per cent. dyestuff, 6 per cent. sodium sulphide conc., ½ per cent. soda ash, 2 per cent. common salt, calculated on the weight of the warps.

It is recommended to use long machines, consisting of twelve boxes, the first four of which contain the dyestuff solution, the fifth and the sixth running water, the seventh and the eighth bichrome (if necessary), the ninth and tenth running water, and the twelfth box dilute soda or ammonia.

The boxes are charged as given above and a thread or a hank is run through the machine in order to ascertain as to whether the shade will be the required strength.

A stock-liquor, prepared by dissolving 100 lbs. dyestuff, 100 lbs. sodium sulphide, 60 lbs. common salt, 25 lbs. soda ash, in 100 gallons of water, is kept in an overhead tank, from which the boxes are fed during dyeing. The warps should be in contact with the dye-liquor for 3 to 3½ minutes. The top rollers in the boxes should be fixed below the level of the liquor in order to avoid "bronzing."

Dyeing of Cotton Piecegoods.

When dyeing cotton piecegoods the bath should be charged with 2 lbs. dyestuff, 2 lbs. sodium sulphide conc., and ½ lb. soda ash, per 10 gallons of liquor.

For subsequent lots use: 6 to 8 per cent. dyestuff, 6 to 8 per cent. sodium sulphide conc., and 2 per cent. soda ash, calculated on the weight of the pieces.

The addition of salt is not advisable, because it reddens the shade of black; but when dyeing the other dyestuffs 2 lbs. of common salt may be added.

The Blues should be given an air passage after squeezing and before rinsing.

The Cross-Dye dyestuffs may be after-treated for ½ hour at 140° F. with 3 to 5 per cent. bichrome, and 3 to 5 per cent. sulphuric acid (D.O.V.), or acetic acid. The cotton should then be well washed and 1 lb. of soda added to the last wash-water.

Dyed yarn may be softened with Turkey-red oil or with olive oil and ammonia, or with the following preparation: 100 lbs. palm-oil are melted in an iron pan, 12 lbs. caustic soda lye, 90° Tw., are added, the mixture is well stirred, covered up and left overnight.

Shades dyed with the *Cross-Dye Blues* are considerably improved by an after-treatment for ½ hour in a cold bath containing 10 to 20 per cent. of hydrogen peroxide and sufficient ammonia to make the bath slightly alkaline. The material is finally rinsed and soaped hot.

Topping of the Cross-Dye Dyestuffs with Aniline Black.

The following method of topping Cross-Dye dyestuffs with Aniline black, by which the cotton is weighted about 10 per cent., may be applied.

Dissolve 6 lbs. of bichrome in boiling water and add the solution to the cold dye-bath. Then add in the order given, 2½ per cent. iron liquor, 3½ per cent. sulphuric acid (D.O.V.), and 2½ lbs. of aniline oil and 2½ lbs. of hydrochloric acid, previously mixed together in a bucket with a little water in order to keep the fumes down. The bath is then stirred up and the dyed, well rinsed cotton is entered into the cold bath, worked

½ hour cold; the temperature is then raised in ½ hour to 140° F. The cotton is lifted out and finally rinsed.

The Thiophor Dyestuffs of Carl Jäger, Düsseldorf-Derendorf.

Thiophor Dark Blue B and R.—The following proportions should be used for dyeing 50 lbs. of cotton yarn :—

	First bath.	Standing bath.
Water	220 gallons	
Dyestuff	4—10 lbs.	3—6 lbs.
Sodium sulphide crystals . .	4—10 lbs.	3—6 lbs.
Caustic soda lye, 76° Tw. . .	0·5— 2 lbs.	0·1—0·2 lbs.
Glauber's salt, or common salt .	3—15 lbs.	0·5—5 lbs.

When dyeing in the jigger, the following additions are made :—

	First bath. Per gallon of liquor. Ozs.	Second bath. Per cent.
Dyestuff	1·2—4·8	5 —14
Sodium sulphide crystals . .	1·2—4·8	5 —14
Caustic soda lye, 76° Tw. . .	0·5—1·0	0·2—0·5
Glauber's salt or common salt .	1·2—4·8	0 —10

The material should be steamed after dyeing and before rinsing.

Thiophor Navy Blue B and R.—For dyeing 50 lbs. of yarn.

	First Bath.	Standing Bath.
Water	220 gallons	
Dyestuff	2·5—8 lbs.	2—5 lbs.
Sodium sulphide crystals . .	2·5—8 lbs.	2—5 lbs.
Soda ash	1—2 lbs.	0·25—0·5 lbs.
Common salt, or calcined Glauber's salt	2·5—10 lbs.	0—5 lbs.

After dyeing, wring and rinse immediately.

Thiophor Black Brown NG extra, and *NR extra*, require equal weights, whilst *Thiophor Black TS extra* requires twice its weight of sodium sulphide for dissolving. They are dyed with the addition of soda ash and Glauber's salt or common salt.

The Thion Dyestuffs of Kalle & Company.

The *Thion dyestuffs* are best dyed for ¾ to 1 hour near the boil, providing the material is entirely immersed in the dye-liquor. If it is, however, partly exposed to the air during dyeing, it is better to conduct the operation at a temperature of 140° F. The usual additions are made to the dye-bath.

The Pyrol Dyestuffs of Farbwerk Mülheim, vorm. A. Leonhardt.

The *Pyrol dyestuffs* are dissolved with the addition of sodium sulphide. 1 part of dyestuff requires :—

	Sodium Sulphide conc. Parts.
Yellows	½
Blue GT, R conc., RR conc., Direct Blue, Navy Blue	¾
All the other dyestuffs	1

The temperature of the dye-bath may vary from 122° to 203° F. A fresh bath ought to register 9° Tw., an old bath 12° Tw., at 60° F. About ½ per cent., or more, of sodium sulphide should be added to the first rinsing bath.

Additions to the dye-bath :—

	First Bath. Per cent.	Second Bath. Per cent.	Third and Fourth Bath. Per cent.
Dyestuff . . .	10—15	8—12	5·5—9
Sodium sulphide conc. .	7·5—15	6—12	4·5—9
Glauber's salt (calcined),	50	20	5
or common salt . .	40	16	4
Soda ash . . .	5	3	2

The dyed material may be after-treated for about ½ hour, at 122° to 194° F., in a bath containing :—1½ to 2½ per cent. of copper sulphate, ½ to 3 per cent. of bichrome, and 2 to 3 per cent. of acetic acid.

Finishing of the goods by giving them a passage through a solution of 20 parts of Turkey-red oil, or 5 parts of Monopole soap in 1,000 parts of water, or by treating them with 1 part of cocoa-nut oil, 1 part of soap, and 1 part of starch, boiled up with water, to which a sufficient quantity of cold water is added so as to make it up to 1,000 parts, is also recommended.

The Thionol Dyestuffs of Levinstein Limited.

The *Thionol dyestuffs* are best dissolved by mixing the dyestuff with concentrated sodium sulphide and 3 to 5 per cent. of soda ash, and then stirring with boiling water. The following proportions should be used when dyeing heavy shades :—

	Dyestuff. Per cent.	Sodium Sulphide conc. Per cent.
Thionol Brown G conc.	10	6
Thionol Brown R, 2R	12	6
Thionol Brilliant Corinth	15	10
Thionol Brilliant Green 3GX, 4GX	12	6
Thionol Brilliant Green GX	12	8
Thionol Khaki	3	2¼
Thionol Brown O.	12	6

Equal parts of dyestuff and of sodium sulphide conc. should be used for all the other Thionol dyestuffs.

The following instructions for dyeing 100 lbs. of cotton yarn with *Thionol Black OO* are given :—

	First Bath.	Standing Bath.
Dyestuff	6 lbs.	4—5 lbs.
Sodium sulphide conc.	8 lbs.	5—6 lbs.
Soda ash	5 lbs.	3 lbs.
Glauber's salt	25—50 lbs.	10—15 lbs.
Dye-liquor	200 gallons.	

The yarn is dyed for about 1 hour just below the boil. After dyeing squeeze, then wash thoroughly and dry as soon as possible.

The *Thionol Blues* should be dyed either cold or at a temperature not exceeding 120° F. When dyeing heavy shades, the cotton yarn should be worked for about 1 hour in the dye-bath, squeezed, evenly wrung, well shaken and washed three times in cold water. 2 to 3 lbs. of sodium sulphide should be added to the first wash-water.

Heavy indigo shades on cotton yarn (100 lbs.) may be obtained, by dyeing cold, with *Thionol Blue 2B*.

	First bath.	Standing bath.
Dyestuff	12—15 lbs.	6—10 lbs.
Sodium sulphide conc.	12—15 lbs.	6—10 lbs.
Soda ash	5— 8 lbs.	3— 5 lbs.
Common salt	60—100 lbs.	5—10 lbs.

Light or medium shades on warps should be dyed in a two-box machine, the first box containing the dyestuff solution, the second, water. For dyeing heavy shades it is preferable to use a four-box machine, the first two boxes containing the dye-liquor; in the third box, which is left empty, the colour is exposed to the air, in order to oxidise it, the fourth box being used for rinsing. Heavy shades are either dyed cold or at a temperature not exceeding 120° F.

The dye-bath should be prepared, per 10 gallons of liquor, with :—Dyestuff, 1 to 2 lbs.; sodium sulphide conc., 1 to 2 lbs.; soda ash, 3 to 4 ozs.; common salt, 1 to 2½ lbs.

For every 100 lbs. of warps passed through the machine add :—Dyestuff, 6 to 10 lbs.; sodium sulphide conc., 6 to 10 lbs.; soda ash, 3 to 5 lbs.; common salt, 5 to 10 lbs.

The other Thionol dyestuffs are dyed in the usual manner with the addition of sodium sulphide, soda ash, and common salt or Glauber's salt.

Dyeing of Cotton Piecegoods in the Jigger.

The pieces (100 lbs.) should be given four ends at the boil; the dyestuff solution and the additions should be added in equal portions during the first two ends. After dyeing, wash off immediately in a separate jigger, first three times in cold, and finally once in warm water.

	First Bath.	Standing Bath.
Dyestuff.	6 lbs.	4½ lbs.
Sodium sulphide conc. . .	8 lbs.	5 lbs.
Soda ash	4—5 lbs.	3 lbs.
Glauber's salt	15 lbs.	5—10 lbs.
Sufficient water to make up to .	16—18 gallons	

Thionol Black OO extra conc., is similar in shade but much stronger than the *OO*. It requires ¾ of its weight of sodium sulphide conc. for dissolving, and a deep black in a standing bath may be obtained with 3½ per cent. of dyestuff.

Dyeing of Thionol Dyestuffs on Cotton Piecegoods with Worsted Selvedges.

The method of treating goods with formaldehyde in order to prevent the wool fibre from being attacked by alkalies or by sodium sulphide, was patented by Levinstein Limited.

In a further patent (No. 8111/07) a method is described for dyeing the cotton in *union goods* black, leaving the wool practically undyed. The following bath is prepared for dyeing 100 lbs. of union goods: 30 lbs. *Thionol Black O paste*, 3 to 6 lbs. sodium sulphide conc., 5 to 15 lbs. hydrosulphite NF conc., 5 to 15 lbs. glue, ½ to 2 lbs. caustic soda lye (70° Tw.), and the necessary quantity of water. Dye at 18° to 25° C., and rinse well after dyeing. The addition of half the quantity of dyestuff, etc., will be required for dyeing subsequent lots of material.

The Thiogene Dyestuffs of the Farbwerke vorm. Meister Lucius and Brüning.

When dyeing light shades with the *Thiogene dyestuffs*, the amount of sodium sulphide should be increased, and either no salt, or a small quantity only, should be added. For heavy shades, sufficient soda and common salt has to be added in order to produce a liquor of 9° Tw. in strength.

Glauber's salt is to be used in preference to common salt, in cop dyeing. The proportion of cotton to dye-liquor should be: Dyeing of yarn in the ordinary dye-beck and loose cotton in an open vessel, 1 : 20; dyeing of piecegoods in the jigger, 1 : 5; dyeing of cops, cheeses, etc., in special machines, 1 : 4 to 1 : 20. The following table will approximately give the composition of the dye-bath when dyeing with the *Thiogene Blacks concentrated.*

I. For dyeing in a fresh bath.
II. For dyeing the second lot of material in the same bath.
III. For dyeing the third lot of material in the same bath.

Proportion of cotton to dye-liquor.	Dyestuff. Per cent.			Sodium Sulphide Crystals. Per cent.			Soda Ash. Per cent.			Glauber's Salt. Per cent.		
	I.	II.	III.	I.	II.	III.	I.	II.	III.	I.	II.	III.
1 : 4	12	9·5	7	36	18	14	2·5	0·5	0·5	—	- -	—
1 : 8	12	9·5	7	36	18	14	4	1·0	0·75	15	- -	- -
1 : 12	12	9·5	7	36	18	14	5	1·5	1·0	25	5	—
1 : 20	12	9·5	7	36	18	14	6	2·0	1·5	50	10	5

Although satisfactory results may be obtained by dyeing at a low temperature, it is preferable to dye near the boil. Thorough squeezing, hydroextracting, or wringing after dyeing is essential. The goods are then well rinsed and, if necessary, they may be finally treated at 122° to 176° F. with 1 per cent. of lard and 1 per cent. of starch; or with 3 per cent. of soft soap; or with 3 per cent. of Marseilles soap.

Thiogene Blacks may be topped with logwood. The material, after having been rinsed, is treated for 20 minutes in a hot bath containing 1 to 2 per cent. logwood extract, and 1 per cent. copper sulphate.

Useful medium grey shades are obtained by dyeing cotton in the first water used for rinsing Thiogene Black dyeings. Shades obtained in this manner may be used with advantage as a bottom for Aniline black and indigo blue.

Thiogene New Blue does not require steaming after dyeing.

One of the following after-treatments may be applied in special cases:—

(1) A passage through an alkaline bath is necessary if the dyed material has been treated with acid, as, for instance, in the case of cotton warps in union goods in which the wool has been dyed with acid colours, or if the shades have been after-treated with metallic salts.

(2) The shades are after-treated with copper and chromium salts in order to improve their fastness.

(3) *Thiogene Blues* have to be developed by steaming with a mixture of steam and air.

(4) *Thiogene Blue B* has to be developed by ageing (smothering) in a warm moist atmosphere.

The Thioxine Dyestuffs of Chemische Fabrik Griesheim-Elektron, Werk Oehler.

The *Thioxine dyestuffs* are dyed with the addition of 8 per cent. soda ash and 35 to 50 per cent. calcined Glauber's salt. One part of dyestuff requires:—

	Sodium sulphide.
Yellow G, Indigo B, Dark blue B. . . .	1 part.
Orange R, Browns, Black Go, A, RNo, RTo. .	1½ parts.
Black 3Bo, Olive Boo, Goo.	¼ part.
Black 4B.	¾ part.

The proportion of cotton to dye-bath should be about 1 : 15. Less salt, about one-third or one-fifth of the quantities given above, should be used in dyeing cops or cheeses or other material in special apparatus.

Deeper shades are obtained if the cotton is exposed to the air for some time before rinsing.

The Sulphur Dyestuffs of the Société des Matières Colorantes de Saint-Denis.

Vidal Black and *Saint-Denis Black* require to be developed after dyeing, whilst this is unnecessary with *Autogène Black EEB*; the latter should be dissolved with twice its weight of sodium sulphide concentrated, when dyeing in a fresh bath, whilst the same weight should be used when dyeing subsequent lots in the same bath. The strength of the colour solution should be about 2 per cent. Preparation of the dye-bath for 10 lbs. of cotton:—

	First bath.	Second bath.
Autogène Black EEB conc. . . .	8 %	6 %
or Autogène Black EEB double . .	6 %	4½ %
Soda ash	1 lb.	1 lb.
Common salt	10—15 lbs.	5 lbs.

Sufficient common salt should be added in order to give a specific gravity of 10·5° to 12° Tw. at 60° F.; 2½ parts of Glauber's salt may be used in place of 1 part of common salt. Dye at the boil for 1 hour, squeeze or wring, rinse thoroughly, and soap.

When dyeing loose cotton, 1 part of Turkey-red oil per 1,000 parts of dye-bath should be added, and the cotton may be finally treated at 140° to 160° F. in a bath containing either starch and oil, or starch and Turkey-red oil.

Cachou de Laval, Cachou R, and Thiocatéchine.—Prepare the dye-bath with 10 per cent. of soda ash and 5 to 200 per cent. of common salt, calculated on the weight of cotton to be dyed. Enter the goods into the warm dye-bath, heat to the boil, and work at the boil for ¾ hour. Wring or squeeze, rinse thoroughly and fix ½ hour at 140° to 160° F. in one of the following solutions: 5 per cent. of sodium bichromate, with or without the addition of 1 to 5 per cent. of sulphuric acid; or 5 per cent. copper sulphate and 5 per cent. common salt; or 5 per cent. sulphuric acid, cold.

Rinse until free from acid. The cotton may be finally treated in a boiling bath containing 3 per cent. potato starch and 3 per cent. cocoa-nut oil.

The Thional Dyestuffs of Chemical Works formerly Sandoz.

The *Thional dyestuffs* are dissolved and applied in the usual manner, with the addition of sodium sulphide, soda ash and Glauber's salt. The *Greens* should be exposed to the air after squeezing and before rinsing. *Thional Blue R* and *RR* may be brightened by an after-treatment with either hydrogen peroxide, bleaching powder solution, or oil of turpentine.

The Auronal Dyestuffs of Chemische Fabriken vorm. Weiler-ter Meer.

All the *Auronal dyestuffs* should be dyed for about 1 hour at 195° F., with the exception of *Auronal Blue R conc.*, which is best dyed at 120° F. When dyeing in a standing bath, one part of the dyestuff requires the addition of the following quantities of sodium sulphide for dissolving :—

	Sodium sulphide. Parts.
Green T, G extra, Corinth R, Blacks in paste . .	$\frac{2}{3}$
Olive B, Brown BG, V, Deep Brown B. . . .	1
Blues, Green 2B extra, Brown 2G, RB, RV, Black Brown VI conc., Black 4B, 2B extra .	$1\frac{1}{2}$
Yellows, Orange, Dark Green B, Olive G, Black N. extra, 4G. extra	2

$1\frac{1}{2}$ times the quantities of sodium sulphide given above should be used for the first bath.

The following proportions are to be used, in addition to the sulphide given above, when dyeing deep shades with the Auronal dyestuffs :—

	First bath.		Standing bath.
Dyestuff . . .	8—14 %		6—10 %
Soda ash . . .	$6\frac{1}{2}$—8 ozs.	per 10 gallons of liquor.	2—3 %
Turkey-red oil . .	$3\frac{1}{4}$—5 ozs.		1—2 %
Common salt . .	2—3 lbs.		5 –10 %

The dye-bath should register 9° to 15° Tw., at 60° F.

In order to improve the fastness of the Auronal dyestuffs, the dyed material may be after-treated for 20 minutes at 175° F. with 1 to 3 per cent. of copper sulphate and 2 to 3 per cent. of acetic acid; or with 1 to 3 per cent. of bichrome. Or 1 to 2 per cent. of copper sulphate may be added to the last rinsing bath.

A harder feel may be obtained by treating the cotton after dyeing in a bath containing, per 10 gallons, 3¼ ozs. of soap, 1¾ ozs. of size, and 5 ozs. of acetic acid, whilst a softer feel is produced by treating the material for ¼ hour, at 140° F., with the following emulsion: 3¼ ozs. of Marseilles soap are dissolved in water and mixed with 1¾ ozs. of olive oil, or castor oil, well boiled together, and made up to 10 gallons with water.

PART XI

ACID AND RESORCINE DYESTUFFS

Alkali Blues (Ba., Cl., H.).
Alkaline Blue RRR to 6B (Ca.).
Aniline Grey (Ca.).
Azoflavine (Ba.).
Biebrich Scarlets (Ka.).
Blackley Blues (Lev.).
Bleu de Lille (Oe.).
Brilliant Croceïnes (ML., Ca., J., Da., Ka.).
Brilliant Induline (Ka.).
Brilliant Orange G (ML.).
Coccine 2B (Be.).
Cocceine Scarlet (Poir.).
Cotton Blues (Da., G., ML., Oe., Poir.).
Cotton Light Blue (ML.).
Cotton Scarlet (Ba., J., Ka.).
Croceïne Orange (Ka.).
Croceïne Reds (Da.).
Croceïne Scarlets (Cl., Ka.).
Eosines (Ba., Be., Ca., CI., Cl., Da., H., J., Ka., ML., Poir., W.).
Eosine Scarlet (Ca., W.).
Erythrine P, X, RR (Ba.).
Erythrosines (Ba., Be., Ca., Da., J., Ka., ML., Poir., W.).
Fast Pinks (Da.)
Fast Scarlets (Ba.).
Fluoresceïne (Poir.).
Jute Blue (Oe.).
Light Blue for Silk (Be.).
Metanil Yellow extra (Ba., Be.)
Methyl Blues (Be., Ca., ML.).
Methyl Blue for Cotton (Ka., Oe.).
Methyl Cotton Blues (Da.).
Methyl Eosine (Be., Poir.).
Methyl Soluble Blue (Ba.).
Naphthol Yellow S (Ba.).
Nigrosine, soluble in water (Ba., Ca., Cl., J., Ka.).
Orange II. (Ba., Be., By., Ca., CI.).
Paper Red PSNR (CI.).
Phloxines (Ba., Be., Ca., Da., J., ML., W.).
Pink B, M (H.).
Ponceau (Be., CI.).
Pure Blue (Ka., ML., Oe.).
Quinoline Yellow (Ba., Be.).
Rose Bengal (Ba., Be., Ca., Da., ML., W.).
Scarlets (Ba., Be., Ca., H.).
Silver Grey (Ca.).
Solid Blue (Ca.).
Soluble Blues (Ba., Ka., Cl., H., Oe., Sa.).
Water Blues (Be., Ca.).

Dyeing with the Acid and Resorcine Dyestuffs.

The vegetable fibres exhibit but little affinity for these dyestuffs; the process of dyeing, therefore, merely consists in impregnating the fibres with a strong solution of the dyestuff. The term "painting" has, therefore, been justly applied to the dyeing of cotton piecegoods with the acid dyestuffs. The shades obtained are, without exception, not fast to washing, but with

some of the acid dyestuffs shades may be obtained which are, comparatively speaking, very fast to light.

The *Eosines* and the *Rhodamines* may be applied on a Turkey-red oil, or a Turkey-red oil aluminium mordant. This process has been described under the dyeing of the basic cotton dyestuffs.

Eosines, Erythrosines, Rose Bengal, Phloxine, Fast Pinks. Dye for ½ to 1 hour in a lukewarm concentrated (short) bath, containing 30 to 60 lbs. of common salt per 100 gallons of liquor, or steep the cotton for some time, wring thoroughly and dry at a low temperature or in the open air.

The fastness of the shades to water may be improved by an after-treatment with *Solidogen A* (Meister, Lucius and Brüning). The dyed material is entered into and worked for ½ hour, at 167° F., in a bath containing 2 per cent. of hydrochloric acid, 2 to 6 per cent. Solidogen A pat., and 50 to 70 lbs. of common salt per 100 gallons of liquor. Rinse well and dry. 5 to 10 lbs. of ammonium sulphocyanide must be first added to every 100 gallons of water if copper dye-vessels are used.

Cotton Scarlet, Cotton Scarlet extra, Erythrosine, Orange X (Ba.). Work the cotton, for ½ hour, cold, in a solution of stannate of soda (3° Tw.), steep for a few hours, wring evenly, then steep for 1 hour in a bath containing 2 lbs. alum per 100 gallons of water, wring evenly and dye in a concentrated bath for ¾ hour at 140° F. Wring without rinsing and dry, if convenient, cold. For dyeing further lots the stannate bath has to be kept at 3° Tw., but a fresh alum bath is required each time. The dye-bath may be kept and strengthened by adding half the amount of dyestuff.

Another method consists in impregnating the cotton with stannate of soda as given above and then treating it for 1 hour in a bath containing 20 lbs. alum, and 3 lbs. of soda ash, per 100 gallons. After this wring evenly, enter into the concentrated dye-bath at 130° F. (60° C.), work for ¾ hour, whilst the bath is cooling, wring and dry.

Azoflavine, Orange II, Scarlet RA, R, RR, RRR, (Ba.), *Cotton Scarlet* (Ba.), *Erythrine P, X, RP, Fast Scarlets* (Ba.), *Ponceau G, R, 4R, 6RB, 4GB, BO extra* (Be.), *Scarlet GR,* (Be.), *Quinoline Yellow, Metanil Yellow* may be dyed in the following manner: Enter the cotton into the lukewarm dye-bath, which should

contain 2 to 10 lbs. of dyestuff per 100 lbs. of cotton, and to which 10 to 20 lbs. of common salt, and ½ to 2 lbs. of alum have been added per 100 gallons. Work the cotton for half an hour, wring evenly and dry at ordinary temperature.

Alkali Blue (H.), *Soluble Blues*, *Orange IV* (H.), *Orange G* (H.), *Croceïne Scarlets*, *Scarlet O to 5O and R to 3R* (H.), *Eosines*, *Pink B*, *M(H.)*.

The pieces are given two ends in the padding machine at 140° F., and dried. 100 gallons of padding liquor are prepared by adding :—Dyestuff according to depth of shade required, 8 to 10 ozs. Glauber's salt, 8 to 10 ozs. alum and ¾ to 1 lb. dextrine.

Naphthol Yellow S, *Metanil Yellow*, *Quinoline Yellow*.

The cotton is worked in a very concentrated lukewarm dye-bath with the addition of 10 to 20 lbs. of common salt per 100 gallons of liquor, wrung and dried in the air.

Brilliant Orange G, *Brilliant Croceïne R*, *B*, *5B* (ML.).

Dye in a concentrated bath, at 104° to 122° F., with the addition of 10 per cent. alum and 40 per cent. common salt, wring and dry.

Brilliant Croceïne M, *R*, *B to 9B*. (Ca.), *Ponceau FR*, *FRR*, *FRRR* (Ca.), *Croceïne AZ* (Ca.), *Paper Red PSNR* (CI.), *Orange II*.

Dye in a concentrated bath with the addition of 3 lbs. alum, 20 lbs. Glauber's salt, per 100 gallons of liquor. Enter at about 120° F., work for half an hour at this temperature, and then allow to cool. Wring evenly and dry at a low temperature.

Brilliant Croceïnes, *Croceïne Reds*, *Methyl Blue for cotton*, *Cotton Blues*, *Bleu de Lille*, *Blackley Blues*. Dye in a concentrated bath at 180° F., with the addition of 5 per cent. of alum which has been neutralised with 1 per cent. of soda crystals. Work the cotton for one hour, wring or hydroextract, and dry without rinsing.

Soluble Blues. Dye in a concentrated bath at 180° F., with 2 to 4 per cent. of dyestuff with the addition of 2 lbs. of stannate of soda and 1 lb. of sulphuric acid, per 100 gallons liquor. Wring well or hydroextract and dry.

Another method: Enter the cotton into the dye-bath (120° F.)

containing the necessary amount of dyestuff, 2 to 8 lbs. tannic acid, and $\frac{1}{4}$ to $\frac{1}{2}$ pint sulphuric acid per 100 gallons; work the cotton whilst the bath is allowed to cool, wring or hydroextract and dry.

For other methods of dyeing Soluble Blues, Cotton Blues, etc., see under "Basic Dyestuffs."

PART XII

INSOLUBLE AZO-COLOURS, PRODUCED ON THE FIBRE

INSOLUBLE azo-colours (the so-called "vacancine" colours) were first produced on the fibre by Robert Holliday in 1880. The Hoechster Farbwerke published a method of producing these colours in 1889.

In order to produce insoluble azo-colours, the fibre has to be first impregnated with a *phenol* dissolved in caustic soda or caustic potash. *Beta-naphthol* gives the most satisfactory results, and is, therefore, chiefly used in practice. The colour is developed by passing the impregnated cotton through the solution of a *diazotised amine of the aromatic series* (diazo-compound).

Paranitraniline and *alpha-naphthylamine* are chiefly used in cotton dyeing, whilst *chloroanisidine*, *dianisidine*, etc., are less frequently employed.

The *beta-naphthol colours* are fast to alkalies and to washing; they do not "bleed." With the exception of Dianisidine Blue, they are also fast to acids. Their fastness to light is satisfactory, and in most cases superior to that of the substantive dyestuffs. The dyeings always rub more or less, especially if the necessary care has not been taken in dyeing. When heated to high temperatures, the colours volatilise slowly. The naphthol itself shows this property, and drying of the cotton which has been prepared with the naphthol solution at too high a temperature, or allowing the material to be in contact with the surface of the drying cylinders for too long a time, may already cause some of the naphthol to volatilise.

The fastness of the insoluble azo-colours may be improved by an after-treatment with metallic salts, especially copper salts, but the lake formed is not very stable; it is decomposed by the action of acids or alkalies. The shade of the colour is considerably changed by this after-treatment. Paranitraniline red after-treated with copper sulphate gives a brown. In the case of Dianisidine Blue, an after-treatment with copper salts is

necessary in order to convert the unstable reddish-blue into a useful blue which is fast to washing and to light, but not fast to acids. A copper salt may, in some cases, be added to the developing bath, or to the naphthol solution.

The Dyeing of Paranitraniline Red on Cotton Yarn.

Preparing.—The yarn is boiled as usual with caustic soda, rinsed and dried. It is not advisable to use the moist yarn on account of the water which would be introduced into the preparing bath.

The preparing consists in impregnating the yarn with a solution of beta-naphthol in caustic soda lye. For this purpose the yarn is either treated by hand in a "bowl," as shown in Fig. 66 (a wringing peg should be provided immediately above the bowl) or it is worked in a *tramping machine*, as described under "Turkey-red" (Fig. 68, p. 314).

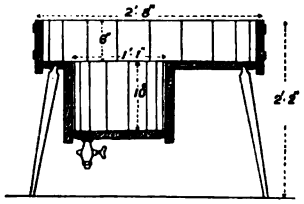

Fig. 66.—"Bowl" for impregnating yarn with beta-naphthol solution.

In some cases the raw unboiled yarn is treated in the preparing bath, but great care has to be taken to ensure even penetration of the preparing liquor.

Yellowish-red shades are produced when ordinary beta-naphthol is used, whilst more bluish shades may be obtained with *Beta-naphthol R* (ML.) or *Beta-naphthol RC* (Ca.).

When using either beta-naphthol RC or beta-naphthol, the preparing liquor required for 100 lbs. of cotton yarn, is made up as follows: Mix 2 lbs. 3¼ ozs. beta-naphthol with 2 lbs. 3¼ ozs. caustic soda lye, 75° Tw.; add 2¼ gallons boiling water and stir until dissolved. Dissolve separately 5½ lbs. Turkey-red oil or 5½ lbs. castor-oil soap in 2¼ gallons boiling water. Somewhat bluer and brighter shades are obtained by using castor-oil soap. (See under "Soap," p. 53.) Mix the two solutions and dilute with water to 13¼ gallons.

An addition of tartar emetic to the beta-naphthol solution is sometimes made in order to prevent the impregnated yarn from turning a brownish shade during drying. A brighter red is

thus produced. If a precipitate of antimony oxide is formed, sufficient caustic soda must be added to dissolve it.

The bowl or trough is charged with 3½ gallons of the preparing liquor, which should have a temperature of about 105° F., or even higher than this. 2 lbs. of yarn are worked at a time. The yarn is turned a few times, well wrung, or hydroextracted, and dried, or after the 100 lbs. of yarn have been passed through, it is passed once more through the same bath (in 2-lb. lots), wrung, wrapped up in light calico and hydroextracted for 15 to 20 minutes. The yarn is now hung loosely on square sticks, dried sharply (best overnight), and finally developed. 1$\frac{9}{16}$ pints of the naphthol solution should be added to the liquor after each 2-lb. lot of yarn has been impregnated.

Developing.—When using *Paranitraniline C* (Cassella), the developing bath for 100 lbs. of cotton yarn is prepared as follows:—

A.—1 lb. 14 ozs. Paranitraniline C are well mixed with 5¼ pints boiling condensed water and dissolved by adding 3½ pints hydrochloric acid, 32° Tw. The acid solution is run in a thin stream, while constantly stirring, into 4½ gallons of very cold water. As soon as the solution has cooled to a temperature below 57° F., a solution of 1 lb. 1½ ozs. nitrite of soda in about 4 pints of cold water is poured into it, whilst stirring. After about 10 minutes the clear solution is diluted with cold water to 9¼ gallons.

B.—2½ pints caustic soda lye, 36° Tw., are diluted with cold water to 4 gallons.

Or if a more blueish red is required:—

B I.—2$\frac{3}{16}$ pints caustic soda lye, 36° Tw., are diluted with cold water to 1 gallon 5 pints and mixed with a solution of 2 lbs. 3½ ozs. of acetate of soda dissolved in 1 gallon 5 pints of cold water. The whole is diluted to 4 gallons.

Or for producing still more bluish shades of red:—

B II.—4 lbs. 7 ozs. acetate of soda are dissolved in 4 gallons of cold water.

The use of very cold water is essential. If the temperature in the dyehouse is above 68° F., small pieces of ice should be thrown into the bowl in which the yarn is developed.

A more stable diazo-solution is obtained, at a low cost, if caustic soda lye alone is used for neutralising, but the shade of

the red will be very yellowish. The bluest shades of red are obtained by using sodium acetate.

The developing bath (for 100 lbs. of yarn) may be prepared with *Nitrazol C pat.*, in place of paranitraniline.

A.—12 lbs. 2 ozs. Nitrazol C are dissolved by stirring with 6½ gallons cold water. Allow to stand for 30 to 40 minutes, pass the solution through a hair-sieve and dilute with cold water to 9¼ gallons.

B.—1 gallon, ⅜ pints caustic soda lye, 36° Tw., are diluted with cold water to 4 gallons.

Or, if more bluish shades are required :—

B I.—7½ pints caustic soda lye, 36° Tw., are diluted with cold water to 1 gallon 5 pints, and mixed with a solution of 2 lbs. 10½ ozs. sodium acetate in 1 gallon 5 pints cold water. The whole is diluted with water to 4 gallons.

A bowl, similar to the one used for preparing the yarn, but somewhat larger (capacity about 6½ gallons) is used for developing the red. The bowl is charged with 2 gallons 5 pints of very cold water (if necessary with the addition of small lumps of ice), 2¼ gallons of liquor *A*, and 7½ pints of liquor *B*, *B I.*, or *B II.*

A 2-lb. lot of yarn is passed through, wrung, passed through once more and wrung. For each following 2-lb. lot 1⅛ pint of liquor *A* and ½ pint of liquor *B*, or *B I.*, or *B II.*, must be added. When all the yarn has been developed, rinse thoroughly and soap at the boil.

It may be found useful, in some instances, to rinse after the first soaping and then to soap a second time.

When using *Azophor-Red* (ML.) in place of paranitraniline, two solutions, A and B, have to be prepared :—

Solution A.—4,500 to 5,600 grms. Azophor-red are mixed with 30 litres cold water. For this purpose a barrel, with a tap immediately above the bottom, should be provided. The whole will be dissolved in ¼ to ½ hour. Allow to stand for 1 to 2 hours. Any insoluble matter will rise to the surface of the liquor. The clear solution is filtered through calico, and the residue on the filter and in the barrel is rinsed with 10 litres cold water. In this manner 40 litres of solution *A* are obtained.

Solution B.—2 to 2½ litres caustic soda lye (22° Bé.), 7½ to 8 litres water. Make the whole up to 10 litres.

For developing, slowly mix 40 litres of *A*, whilst stirring, with 10 litres of *B*. Stir until practically clear.

A developing bath containing 56 grms. of Azophor-red and 14 grms. of paranitraniline per litre has been found to give very good results on the large scale.

The developing is carried out as described above.

Nitrosamine-red paste (Badische Anilin und Soda Fabrik) may be used as developer in place of paranitraniline.

For dark shades on cotton yarn 8 lbs. 2 ozs. Nitrosamine-red paste are stirred up with 3½ gallons cold water; then add slowly 3 lbs. 1 oz. hydrochloric acid, 32° Tw.; let the mixture stand for ½ hour, make up to 7½ gallons with cold water, and before using add 3 lbs. 12 ozs. sodium acetate crystals.

In the following two methods of preparing the developing bath with *Paranitraniline extra* (ML.) ice has to be employed.

1*st Method.*—280 grms. paranitraniline extra are made into a paste with 200 c.c. cold water. The mixture is cooled. Then add 520 c.c. sodium nitrite solution (290 grms. per litre). This is poured gradually, whilst stirring, into a mixture of 440 c.c. hydrochloric acid (22° Bé.), and 4,000 c.c. ice-water and ice. Stir, filter, and before using add 600 grms. sodium acetate, and dilute with cold water to 10 litres.

2*nd Method.*—280 grms. paranitraniline extra are dissolved in 1,200 c.c. boiling water and 440 c.c. hydrochloric acid, 22° Bé. The whole is thoroughly stirred whilst cooling in order to precipitate the paranitraniline in a very finely-divided state. Now add 1,000 c.c. cold water and 1,000 grms. ice. The temperature of the mixture should be 0° to 2° C. Then add 520 c.c. sodium nitrite solution (290 grms. per litre). Stir frequently, filter and add, before using, 600 grms. sodium acetate. Finally dilute with water to 10 litres.

Paranitraniline Red on Cotton Piecegoods.

Paranitraniline red is very largely dyed on cotton piecegoods. The bleached dried pieces should be padded once, twice, or even three times with the beta-naphthol solution, according to the thickness of the material, and well squeezed in order to prevent an excess of the naphthol solution being dried on the surface of

the goods, as this causes rubbing of the shade. Sharp drying by means of a passage through the *hot flue* is best, although drying cylinders may be used for the purpose. In the latter case it is essential to wrap the first three or four cylinders with cotton cloth.

The Beta-naphthol Solution.—Dissolve 3 lbs. 5 ozs. beta-naphthol (Ba.) in 3 lbs. 5 ozs. caustic soda lye (77° Tw.) and 4½ gallons hot water, add 11 lbs. Turkey-red oil F (50 per cent.), stir and make up to 22 gallons; or 250 grms. beta-naphthol (ML.) are dissolved in 400 c.c. caustic soda lye (22° Bé.) with the addition of 250 grms. *Para-soap PN* (ML.), and made up to 10 litres; or 4½ lbs. beta-naphthol and 6½ ozs. *Red developer C* (Ca.) or

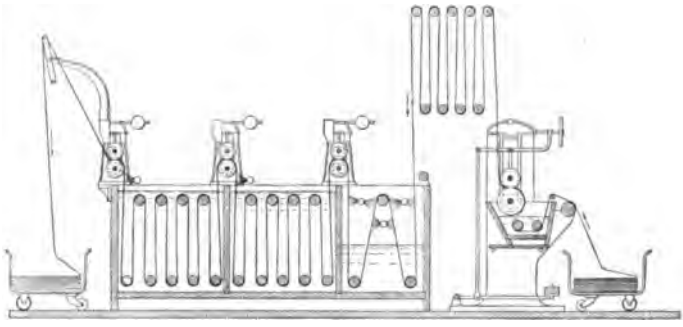

FIG. 67.—Machine for Developing Para-Red on Piecegoods.

4 lbs. 14 ozs. *Naphthol RC* (Ca.) are stirred with 5 lbs. caustic soda lye (75° Tw.); 7½ lbs. boiling water and subsequently 6½ lbs. cold water are added, then 10 lbs. castor-oil soap (see under "Soap," p. 53), dissolved in 5 gallons hot water, are added, and the whole is diluted with cold water to 20 gallons.

If a more yellowish shade of red is desired, the addition of Red developer should be omitted.

Developing.—The machine in use for developing Para-red on piecegoods, illustrated in Fig. 67 (taken from *Die Baumwollfärberei*, L. Cassella & Co.), consists of a padding machine with wood or iron trough for the diazo-solution.

After padding, the pieces travel over guiding rollers in order to expose them for a short time to the air. They pass ultimately into an open-width washing machine of the "open-soaper" type.

One or two compartments are provided with spirt-pipes, whilst running water is employed in the other compartments. The pieces are finally soaped at the boil, rinsed and dried. The temperature of the developing bath, which has to be continuously strengthened with fresh diazo-solution, should not be above 60° F.

Developing Solution Prepared with Nitrosamine Red Paste (Badische Anilin und Soda Fabrik).

A.—Stir carefully together 17 lbs. 10 ozs. Nitrosamine-red paste with 4½ gallons cold water, add, while stirring well, 8 lbs. 2½ ozs. hydrochloric acid, 32° Tw., and allow to stand for 20 to 30 minutes, stirring occasionally.

B.—8 lbs. 13 ozs. sodium acetate crystals are dissolved in 4½ gallons cold water. Shortly before using pour *B* into *A*, and make up with cold water to 22 gallons.

Developing Solution Prepared with Paranitraniline (ML.).

140 grms. paranitraniline are dissolved in 1,200 c.c. boiling water and 220 cc. hydrochloric acid, 22° Bé. Stir continuously during cooling, and then add 1,000 grms. ice, and when the temperature has been reduced to 0° to 2° C. add 260 c.c. sodium nitrite solution (290 grms. per litre). Stir frequently, filter, and before using add 200 grms. sodium acetate, and make up with cold water to 10 litres.

Developing Solution Prepared with Paranitraniline C (L. Cassella & Co.).

A.—2 lbs. 13 oz. Paranitraniline C are mixed with 2 gallons boiling water and dissolved by the addition of 4½ pints hydrochloric acid, 36° Tw. This solution is stirred into about 5 gallons cold water and cooled to 100° to 142° F. by the addition of 10 lbs. of ice. 1 gallon 4½ pints of a solution of sodium nitrite (1 : 10) are then added. After a few minutes the solution will have become clear, when it is diluted with cold water to 15 gallons.

B.—6 lbs. sodium acetate are dissolved in 4 gallons water and diluted with water to 5 gallons.

The developing bath is composed of 3 parts of *A* and 1 part of *B*.

Developing Solution Prepared with Nitrazol C (Cassella).

A.—17½ lbs. Nitrazol C are dissolved at ordinary temperature in 5½ gallons water and reduced with water to 16½ gallons.

B.—1 quart caustic soda lye, 77° Tw., is diluted with 2½ gallons water; this solution is mixed with 6½ lbs. sodium acetate, dissolved in 2½ gallons water, and made up with water to 5½ gallons.

The developing bath is composed of 3 parts of *A* and 1 part of *B*.

Alpha-Naphthylamine Claret.

A bluish red, which is fast to washing, acids and alkalies, but only moderately fast to light, is produced with alpha-naphthylamine and beta-naphthol. The method of working is the same as that given for Paranitraniline red, but the addition of Turkey-red oil, etc., is not required. Alpha-naphthylamine claret is chiefly used on piecegoods. Meister, Lucius and Brüning give the following instructions for dyeing claret.

Beta-naphthol Solution:—250 grms. beta-naphthol, 500 c.c. caustic soda lye (22° Bé.), 750 grms. tragacanth-thickening (60 : 1,000), made up to 10 litres.

Developing Bath Prepared with Alpha-Naphthylamine Base.

143 grms. alpha-naphthylamine base are dissolved in 3,000 c.c. water and 100 c.c. hydrochloric acid, 22° Bé., and cooled. Then add 200 c.c. hydrochloric acid, 22° Bé., and 2,000 grms. ice. Allow to cool to about 0° C., and add, whilst stirring, 260 c.c. of a solution of sodium nitrite (290 grms. per litre). Immediately before using add 300 grms. sodium acetate, and dilute with cold water to 10 litres.

Developing Bath Prepared with Alpha-Naphthylamine Hydrochloride Paste, 36 per cent.

500 grms. of the paste are mixed with 500 c.c. cold water. Add 2,000 grms. ice. When the temperature is about 0° C., add slowly 200 c.c. hydrochloric acid, 22° Bé. After 10 to 15 minutes filter, and immediately before using add 300 grms. sodium acetate. Then dilute with cold water to 10 litres.

Developing Bath Prepared with Alpha-Naphthylamine Salt S Powder.

The diazo-solutions prepared with alpha-naphthylamine salt S powder are more stable than those prepared with ordinary alpha-naphthylamine.

192 grms. alpha-naphthylamine salt S powder are made into a paste with 2 litres cold water and 100 grms. sulphuric acid, 66° Bé. Then add 2 kilos. ice. When the temperature of the mixture is about 0° C., slowly run into it, whilst stirring, 260 c.c. of a solution of sodium nitrite (290 grms. per litre), allow to stand for 15 minutes, filter and add 1,000 grms. tragacanth-thickening. Immediately before using add 300 grms. sodium acetate and dilute with water to 10 litres.

Scarlet with Chloroanisidine P (Ba.).

Diazotised chloroanisidine on beta-naphthol prepared piece-goods produces a very brilliant scarlet, fairly fast to washing, light and bleaching.

The naphthol solution is prepared as given on p. 279.

Preparation of the Developing Bath.—Dissolve 4 lbs. 5 ozs. chloroanisidine P in 11 gallons of water, and 3 lbs. 5 ozs. hydrochloric acid, 32° Tw. Warm until dissolved, then cool with ice to 40° to 50° F.; add slowly, while stirring, a solution of 1 lb. 8½ ozs. to 1 lb. 9 ozs. sodium nitrite in 2 gallons water, and stir for 10 to 15 minutes. Shortly before using add a solution of 4½ lbs. sodium acetate in 2 gallons water, and make up with cold water to 22 gallons.

A brilliant orange, on cotton piecegoods which have been prepared with beta-naphthol, may be obtained by using *Metanitraniline R* (Ba.). The method of working is the same as that given for Paranitraniline red.

Dianisidine Blue, Azophor Blue D (Naphthol Blue) (ML.)

is produced by coupling *Azophor Blue D* (diazotised dianisidine) with beta-naphthol.

The *naphthol solution* is prepared as follows:—250 grms. beta-naphthol; 500 c.c. caustic soda lye, 22° Be.; 1,000 grms.

ammonia Turkey-red oil; 150 grms. sodium acetate crystals; made up with water to 10 litres.

Developing Bath.—Dissolve 250 grms. Azophor Blue D in 8,000 c.c. water. Filter and thicken with 750 grms. flour-thickening, then add 300 c.c. cupric chloride solution, 40° Bé., and 10 grms. chromic acid dissolved in water. Dilute the whole with water to 10 litres.

Other colours which are, however, of minor importance, may be produced on the fibre with beta-naphthol and the following bases:—

Red	with	Beta-naphthylamine.
Orange	,,	Azophor Orange (ML.).
Reddish-orange	,,	Nitro-*p*-Toluidine.
Pink	,,	Azophor Pink A (ML.).
Red	,,	Azophor Pink BB (ML.).
Red	,,	Aminoazobenzene.
Yellow Orange	,,	*p*-Toluidine.
Maroon	,,	Benzidine.
Maroon	,,	Tolidine.
Claret	,,	Aminoazotoluene.
Orange Yellow	,,	Aniline.
Brilliant Scarlets and Pinks	,,	Nitrosamine Pink Bx (Ba.)
Yellowish-orange	,,	Tuscaline Orange Base G (Ba.).
Pink	,,	Azo Pink (ML.).

PART XIII

THE VAT DYESTUFFS

Yellows and Oranges.

Algole Yellows (By.).
Algole Orange (By.).
Anthraflavone G paste (Ba.).
Cibanone Orange R (CI.).
Cibanone Yellow R (CI.).
Helindone Yellow (ML.).
Helindone Oranges (ML.).
Indanthrene Gold Orange (Ba.).
Indanthrene Orange (Ba.).
Indanthrene Yellows (Ba.).
Thio Indigo Orange (Ka.).
Thio Indigo Yellow (Ka.).

Reds.

Algole Bordeaux (By.).
Algole Pink (By.).
Algole Reds (By.).
Algole Scarlet (By.).
Ciba Bordeaux B (CI.).
Ciba Red G (CI.).
Ciba Scarlet G (CI.).
Helindone Fast Scarlets (ML.).
Helindone Pinks (ML.).
Helindone Reds (ML.).
Helindone Scarlets (ML.).
Indanthrene Claret (Ba.).
Indanthrene Copper (Ba.).
Indanthrene Maroon (Ba.).
Indanthrene Red (Ba.).
Indanthrene Scarlet G (Ba.).
Thio Indigo Reds (Ka.).
Thio Indigo Scarlets (Ka.).
Vat Red B (Ba.).

Blues and Violets.

Algole Blues (By.).
Algole Brilliant Violet (By.).
Algole Corinth (By.).
Algole Violet (By.).
Alizarine Indigo (By.).
Brilliant Indigo (Ba.).
Brome Indigo (By.).
Ciba Blue (CI.).
Ciba Heliotrope (CI.).
Ciba Violets (CI.).
Helindone Blues (ML.).
Helindone Violets (ML.).
Hydron Blue pat. R, G (Ca.).
Indanthrene Blues (Ba.).
Indanthrene Dark Blue (Ba.).
Indanthrene Violets (Ba.).
Indigo (Ba., Ka., ML.).
Indophenol (DH.).

Greens.

Algole Green (By.).
Algole Olive G (By.).
Ciba Green (CI.).
Helindone Green (ML.).
Indanthrene Green B (Ba.).
Indanthrene Olive (Ba.).
Leucole Dark Green (By.).

Browns.

Cibanone Brown (CI.).
Helindone Browns (ML.).
Indanthrene Brown (Ba.).
Leucole Brown (By.).
Thio Indigo Brown (Ka.).

Greys and Blacks.

Algole Grey B, 2B (By.).
Helindone Grey (ML.).
Indanthrene Black (Ba.).
Indanthrene Grey (Ba.).

Within the last few years a considerable number of *vat dyestuffs* have been introduced, which enable the dyer to produce a great variety of shades of extraordinary fastness. It should, however, be noted that, comparatively speaking, the vat dyestuffs, especially when used in dyeing heavy shades, are expensive.

W. F. A. Ermen[1] points out that the fastness of shades produced with these dyestuffs varies very considerably, and it is, therefore, advisable to carefully ascertain the resistance towards certain agents of any one of these dyestuffs before using it for a special purpose. This applies particularly to shades dyed on yarns, for instance, which are woven into goods, and which have to pass through the bleaching process.

Artificial Indigo.

Artificial indigo takes the most important position among the vat dyestuffs. Within the last few years it is replacing the natural product more and more, and unless the price of natural indigo can be reduced the time may not be so very far distant when natural indigo, like madder, will be little used.

The artificial product is identical with natural indigo, and, at least, as far as cotton dyeing is concerned, no difference can be detected between the behaviour of the two products in the vat.

The varying composition of natural indigo is one of its serious disadvantages as compared with artificial indigo.

In the following part, general information will be given as regards the working of the different types of *indigo vats*, whilst the additions required will be given in special tables.

The Copperas Vat.

The copperas vat always contains a considerable amount of sediment, and it is, therefore, chiefly used in the dyeing of hanks. In favour of this type of vat are the facts that it is both easily set and kept in condition. A certain amount of indigo is always lost in the copperas vat, due to over-reduction.

The reaction proceeds in accordance with the following equations :—

$$FeSO_4 + Ca(OH)_2 = Fe(OH)_2 + CaSO_4.$$

$$\underset{\text{(Indigo).}}{C_{16}H_{10}N_2O_2} + 2\,Fe(OH)_2 + 2\,H_2O = \underset{\text{(Indigo-white).}}{C_{16}H_{12}N_2O_2} + Fe_2(OH)_6$$

[1] *Journ. Soc. Dyers and Colourists*, Vol. XXVI., p. 263, 1910.

The excess of lime present in the vat dissolves the indigo white.

The temperature in the dyehouse should not be too low in winter time. The indigo should be well ground with water, or if *Indigo paste* (Ba. or ML.) is used, this should be mixed with water. The lime is made into a thin uniform paste with

The Copperas Vat.

	Indigo (natural) 60 % Lbs.	Indigo pure B. A. S. F. 20 % Lbs.	Indigo ML.B 20 % paste. Lbs.	Quicklime. Lbs.	Ferrous sulphate. Lbs.	Remarks.
—	20	—	—	80	80	400 gallons.
Hummel	20	—	—	25-50	30-40	—
Manual of Dyeing, Knecht, Rawson & Loewenthal.	20	—	—	70	70	400 gallons.
Persoz.	20	—	—	20	15-19	400 gallons.
Badische, Anilin & Soda Fabrik.	—	30	—	36	24	60 gallons. Strong stock vat.
Badische, Anilin & Soda Fabrik.	—	16	—	20	16	40 gallons. Medium strength stock vat.
Badische, Anilin & Soda Fabrik.	—	8	—	12	10	20 gallons. Weak stock vat.
Meister, Lucius & Brüning.	—	—	25 lbs. or 5 lbs. powder	20	20	50 gallons. Stock vat.

water, a little warm water is added, and the indigo stirred into it. The copperas is dissolved in water, and the solution added slowly and with continuous stirring to the indigo paste. The whole is poured into a cask, filled up with warm water, covered with a lid, and allowed to stand until it is cooled. During the cooling, which should occupy from 5 to 6 hours, the liquor is occasionally stirred.

The stock vat will be ready as soon as it assumes a clear yellow shade.

The dye-vats have in the meantime been partly filled with water, to which the stock vat is now added. After the liquor has been well stirred for some time, it is allowed to settle.

After 4 to 5 bundles of yarn have been dyed, the vat is stirred up and again allowed to settle. In this manner from 3 to 4 lots may be dyed per day, until the vat is exhausted. If the vats are used in series of, say, 5 vats of different strengths, they may be freshened up from time to time with lime and copperas, until exhausted.

The boiled yarn should be hydroextracted or well wrung, and then roughly shaken before entering it into the vat.

The yarn is soured after dyeing in a 1 to 2 per cent. solution of sulphuric or hydrochloric acid; it is finally well rinsed.

Before pouring the stock vat (Ba. or ML.) into the dye-vat, 1 lb. of ferrous sulphate and 1½ to 2 lbs. of quicklime should be added per 100 gallons of liquor.

The Zinc-Lime Vat.

In the zinc-lime vat the hydrogen required to reduce the indigo blue to indigo white is produced according to the following equation:—

$$Zn + Ca(OH)_2 = ZnO_2Ca + 2\,H.$$

The indigo white dissolves in the excess of lime present in the vat.

As compared with the copperas vat, the zinc-lime vat contains much less sediment, and it may, therefore, be used in all the different kinds of vats.

The indigo should first be ground dry and afterwards with water. The indigo pastes of the B.A.S.F., and of M.L.B., do not require grinding, but are simply well mixed with water. The Badische Company recommend the setting of a stock vat containing 2 to 2½ per cent. of pure dyestuff. The reduction should be conducted at 105° to 120° F., and it should be completed in 4 to 6 hours.

Fresh solutions should be made as required, because long standing is detrimental.

The vat used in dyeing ought to contain from 2 to 3 parts of indigo per 1,000 parts of dye-liquor.

For the purpose of "sharpening" the vat, about 3 lbs. zinc dust and about 9 lbs. lime per 450 gallons should be added to the water, before adding the stock solution. The quantities of indigo, etc., used are given in the table. To the finely-ground indigo add the zinc-dust and about 2 gallons of water, 110° to 115° F.

The quicklime is made into a uniform paste with water, and when cooled to about 115° F. is added to the indigo paste, the whole poured into a cask, filled up with water to 10 gallons, and stirred from time to time during the next 4 to 5 hours.

A vat containing 100 gallons of liquor has to be sharpened occasionally with ½ to 1 lb. lime and ¼ to ½ lb. zinc dust.

There being so much less sediment, the vats need not be as deep as those employed in the copperas process.

The dyed material has to be soured in the usual manner.

The Zinc-lime Vat.

—	Indigo (natural) 67%. Lbs.	Indigo paste 20%. S.B. B.A.S.F. Lbs.	Indigo. M.L.B 20% paste. Lbs.	Zinc dust. Lbs.	Quicklime. Lbs.	Remarks.
Hummel	2	—	—	1	1	Per 100 gals.
Manual of Dyeing	4	—	—	2	5	Per 100 gals.
do.	2	—	—	1½	3¾	Per 100 gals.
do.	1	—	—	1	2½	Per 100 gals.
do.	½	—	—	½	1¼	Per 100 gals.
Badische Anilin und Soda Fabrik	—	10, or 2 lbs. indigo powder	—	1¼	4—5	Per 100 gals.
Meister, Lucius and Brüning	—	—	12½, or 2½ lbs. indigo powder	1½	5—6	Add 1 lb. quicklime and 5 ozs. zinc dust per 100 gallons liquor.

The Hydrosulphite Vat.

The use of sodium hydrosulphite for the purpose of reducing indigo was first recommended by Schützenberger and Lalande.

The hydrosulphite used in this type of vat is capable, in the presence of an alkali, of reducing indigo blue to indigo white, in accordance with the following equation:—

$$C_{16}H_{10}N_2O_2 + Na_2S_2O_4 + 2\ NaOH = C_{16}H_{12}N_2O_2 + 2\ Na_2SO_3.$$

If in place of hydrosulphite, either zinc, bisulphite and lime, or zinc, bisulphite and soda is used in the preparation of the vat, then the hydrosulphite is actually formed in the vat:—

$$4\ NaHSO_3 + Zn = Na_2S_2O_4 + Zn\ SO_3 + Na_2SO_3 + 2\ H_2O.$$

No sediment is formed in the hydrosulphite vat, and it is, therefore, especially suited for dyeing piecegoods in continuous machines and for the dyeing of cops, cheeses, etc. Excess of hydrosulphite does not destroy the indigo.

Hydrosulphite Solution, as used in recipe No. 6 in the table (*Manual of Dyeing*), may be prepared in the following manner: 10 gallons of bisulphite of soda (52° Tw.) are mixed with 15 gallons cold water and 8 lbs. of zinc powder (made into a paste with a gallon of water) are slowly added with cautious stirring. After about an hour 2 gallons of milk of lime (containing 10 lbs. of quicklime) are added to the mixture and the whole stirred for some time, and then allowed to stand for 2 to 4 hours. It is finally filtered, preferably by means of a filter press.

In preparing a vat for dyeing, the hydrosulphite solution, in a proportion of 1 gallon to 500 gallons of water, is added in the first place, and then, after standing at least an hour, the required amount of prepared indigo solution according to the depth of shade to be dyed.

It is best to prepare the hydrosulphite as required, because it decomposes when stored for more than a few days. The addition of about 1 per cent. of strong caustic soda lye to the hydrosulphite solution will make it somewhat more stable.

Hydrosulphites have been introduced which are more stable than the ordinary solution, and which are, therefore, more convenient to use.

Of these may be mentioned *Hydrosulphite O Hoechst*,

Hydrosulphite MLB paste and *Hydrosulphite MLB powder.* The paste is 4 times, and the powder quality 6 to 7 times, as strong as the O brand. The Badische Company recommend the use of their *Hydrosulphite conc. B.A.S.F. powder.*

The Hydrosulphite-Soda Vat.

In order to prepare a vat of 200 gallons, add 2 ozs. hydrosulphite conc. B.A.S.F. powder or 2 lbs. of hydrosulphite O Hoechst; stir well, allow to stand for a few hours, when the vat should be ready for dyeing. The vat exhausts very slowly if an excess of either hydrosulphite or caustic soda is present. In preparing the stock vat, mix the indigo, after it has been finely ground with water, with the caustic soda lye; then heat to about 122° F., and add the hydrosulphite. If the solution has not become yellow after about 1 hour's standing, add a small quantity of hydrosulphite.

The Bisulphite-Zinc Soda Vat and the Bisulphite-Zinc Lime Vat.

The stock vat is prepared by slowly mixing the zinc dust into the bisulphite, and allowing the mixture to stand for a short time. The indigo, finely ground with water, or the paste brands of the B.A.S.F. and of M.L.B., are mixed with the requisite amount of caustic soda or with the corresponding amount of slaked lime, and this paste is then mixed with the bisulphite. The whole is heated to about 120° F.; reduction should be complete after about 1 hour.

The dye-vat is prepared with about 1 gallon of bisulphite, 57° Tw., mixed with 1 lb. of zinc dust per 100 gallons, and stirred up. After this the necessary quantity of the stock vat, prepared as above, is added.

This type of vat is more easily worked and is also cheaper than the ordinary hydrosulphite vat. It is, however, not entirely free from sediment.

Beautiful bright shades are produced by dyeing in the bisulphite-zinc lime vat. Being free from caustic soda, it can be used in dyeing yarn.

Dyeing in the hydrosulphite vat is considerably simplified if reduced indigo, *Indigo MLB Vat II.* (Meister, Lucius and Brüning), is used in place of indigo powder or paste. The recipe No. 9 in the table is for a vat of about 800 gallons

The Hydrosulphite Vat.

	Indigo.	Zinc dust.	Sodium-bisulphite.	Quick-lime.	Caustic soda lye.	Hydrosulphite, see p. 289.	Hydrosulphite conc. powder B. A. S. F.	Hydrosulphite O MLB.	
1. *Manual of Dyeing.*	40 lbs. (60 %).	14 lbs.	14 gals. (52° Tw.)	48 lbs.	—	—	—	—	Per 100 gals. concentrated vat.
2. Badische A. & S. F.	100 lbs. (20 % paste).	8 lbs.	8 gals. (57° Tw.)	30 lbs.	—	—	—	—	Per 100 gals.
3. Badische A. & S. F.	100 lbs. (20 % paste).	8 lbs.	8 gals. (57° Tw.)	—	6 gals. (76° Tw.)	—	—	—	Per 60 gals.
4. Meister, Lucius & Brüning.	5 lbs. powder or 25 lbs. 20 % paste.	2½ lbs.	1¼ gals. (74° Tw.)	8 lbs.	—	—	—	—	Per 15 gals.
5. Meister, Lucius & Brüning.	5 lbs. powder or 25 lbs. 20 % paste.	2½ lbs.	1¼ gals. (74° Tw.)	—	1¼ gals. (76° Tw.)	—	—	—	Per 15 gals.
6. *Manual of Dyeing.*	40 lbs. (60 %).	—	—	—	14 gals. (42° Tw.)	36 gals.	—	—	Per 100 gals. concentrated vat.
7. Badische A. & S. F.	100 lbs. (20 %) or 20 lbs. powder.	—	—	—	6 gals. (76° Tw.)	—	17 lbs.	—	—
8. Meister, Lucius & Brüning.	5 lbs. powder or 25 lbs. (20 %) paste.	—	—	—	1½ gals. (76° Tw.)	—	—	3 gals.	—
9. Meister, Lucius & Brüning.	120 lbs. Indigo MLB Vat II, 20 %.	—	—	—	6 gals. (66·5° Tw.)	—	—	7½ gals.	For a vat of 800 gals. The indigo and the caustic soda are mixed with 15 gals. water at 158° F.

capacity. In addition to the quantities given, the vat is sharpened by adding 1 gallon of Hydrosulphite O. The vat should be stirred for a few minutes, and it ought to show a yellowish-olive shade in transparent light.

A special vat recommended by the Hoechster Farbwerke is the *Hoechster Hydrosulphite-Soda Vat.* The vat contains only a small quantity of caustic soda, but in addition to this, soda ash is used. It is stated that by using this vat, heavier dyeings are obtained than with the other types of vats, that less trouble is experienced in wringing or hydroextracting and that the shades produced "rub" less.

The vat may be used for piece dyeing, but is particularly suited for the dyeing of loose cotton, yarn and cops, etc.

Loose cotton is entered into the vat without previous wetting out. It is worked for about 20 minutes, pressed out, and allowed to oxidise. If necessary, the cotton can be dyed to pattern by one or more immersions of shorter duration. The material is finally rinsed, hydroextracted, and dried. To a vat of 500 gallons add ½ gallon Hydrosulphite O Hoechst, ⅕ gallon Turkey-red oil (50 per cent.), and the following stock vat: 50 lbs. *Indigo MLB* 20 *per cent. Vat II,* 20 lbs. soda ash, 3 gallons Hydrosulphite O Hoechst.

A vat of 500 gallons capacity for dyeing *cotton yarn* should be prepared with ½ gallon Hydrosulphite O Hoechst. The following stock vat is then added: 25 lbs. *Indigo MLB Vat II* 20 *per cent.,* ¼ gallon caustic soda lye, 76° Tw., 10 lbs. soda ash, 1½ gallons Hydrosulphite O. Hoechst.

When dyeing *cops* or *cheeses* in apparatus, the vat-liquor should contain 10 lbs. of *Indigo MLB Vat II* 20 *per cent.,* per 100 gallons. If the liquor shows a higher specific gravity than 7° to 9° Tw., a smaller quantity of soda should be added.

Stock vat: 25 lbs. *Indigo MLB Vat II* 20 *per cent.,* 2 pints, caustic soda lye, 76° Tw., 9 lbs. soda ash, 1 pint Hydrosulphite O Hoechst.

Indigo Solution, B.A.S.F., 20 *per cent.* is used in a similar manner to *Indigo MLB* 20 *per cent. Vat.*

The Hydrosulphite Ammonia Vat.

The Badische Anilin und Soda Fabrik specially recommend this type of vat for dyeing cotton yarn in the hank. It has

no injurious action on the hands of the workmen; it forms no sediment, and the yarn does not require souring after dyeing. The yarn may be dyed in ordinary dye-becks.

Preparation of the Vat for 100 *lbs. of Cotton Yarn,* to be dyed a deep medium blue in 2 dips: Dye-liquor 180 to 220 gallons. The cold dye-liquor is previously "sprung" with 4 ozs. Hydrosulphite conc. B.A.S.F. powder, $\frac{1}{5}$ pint caustic soda, 42° Tw., with the addition of 1 gallon Turkey-red oil F, and 9 lbs. common salt.

One of the following stock vats is prepared and added:—

(*a*) 24 lbs. *Indigo solution B.A.S.F.* 20 *per cent.*, 7 gallons boiling water, 2 pints caustic soda, 42° Tw., 2 lbs. 10 ozs. hydrosulphite conc. B.A.S.F. powder, 2 pints ammonia, sp. gr. 0·936 (about 17 per cent.).

(*b*) $5\frac{1}{4}$ lbs. *Indigo pure B.A.S.F. powder L,* 9 gallons boiling water, $1\frac{1}{2}$ gallons caustic soda, 42° Tw., $5\frac{1}{4}$ ozs. Hydrosulphite conc. B.A.S.F. powder, 2 pints ammonia sp. gr. 0·936 (about 17 per cent).

The mixtures are allowed to stand for about $\frac{1}{2}$ hour. Dyeing may be commenced as soon as the stock vat has been stirred into the dye-vat. The boiled yarn is entered, turned several times under the surface of the liquor (on bent rods), worked for 20 to 30 minutes, and then taken out. Each hank is wrung separately, allowed to oxidise, and is finally rinsed, but not soured.

The vat should be of a yellow or greenish-yellow colour. If the colour is dark green or blue, it should be "sprung" with $\frac{1}{2}$ lb. of hydrosulphite and $\frac{1}{2}$ lb. of caustic soda, 42° Tw., per 200 gallons. The liquor should always smell slightly of ammonia. An addition of 1 to 2 pints of ammonia per day will be found sufficient if the vat is worked regularly. When strengthening the vat, $\frac{1}{2}$ lb. of common salt should be added along with each gallon of stock vat. If the dye-liquor reaches a specific gravity of 9° Tw., no more salt should be added. The common salt added to the vat makes the indigo go more quickly on to the fibres; thus only half the number of dips which have to be given when dyeing in other vats are required. Large quantities of yarn can be dyed at a time. The vat is also suitable for dyeing loose cotton. The hydrosulphite-ammonia vat gives duller blues when dyed in light shades, and less "coppery" blues in heavy shades, than the other vats.

The Fermentation Vat.

The fermentation vat finds only limited employment in the dyeing of cotton goods. It is more difficult to manage than the other types of vats, but the shades obtained are very level. In some European countries and in the East the fermentation vat is still extensively used.

The author has had experience with this type of vat in Sweden, where it is employed both for dyeing blues and also for topping blues dyed in the ordinary copperas vat. In the latter instance the vat is set with a very small amount of indigo.

Shades which have been first dyed in the copperas vat and topped in the fermentation vat are somewhat duller, but they are very level; they are faster to washing and rub less than those dyed in the copperas vat alone.

The fermentation vat also imparts to cotton the peculiar "indigo smell" on which the buyer in some of these countries insists.

A number of substances which contain sugar and starch, and which readily ferment in alkaline solution, such as flour, bran, syrup, raisins, dates, etc., are used in setting the vat. The vat is usually made of copper, in the shape of a cone; width, 1·4 to 1·5 metres; depth, 1·8 to 1·9 metres.

The dyeing is generally conducted at 120° to 140° F., but in some cases the vats are not heated.

For the purpose of comparison nine different methods of setting the vat are given in the table.

Method (1).—The vat is filled with water, which is heated to about 140° F. The woad is crushed and thrown into the vat. Allow to stand for about 1½ hours, then add the madder, the bran and the lime, and finally the finely-ground indigo and the potassium carbonate. The vat is now well stirred and allowed to rest for 24 to 36 hours.

Method (5).—The vat is set with indigo, bran, soda and madder. After fermentation has commenced, slaked lime is added. The dyeing is conducted at 120° F.

Method (7).—The working of the fermentation vat may be considerably simplified if reduced indigo, *i.e. Indigo MLB Vat II*, 20 *per cent.* (Meister, Lucius and Brüning) is used in place of ordinary indigo. Such a vat requires much smaller quantities of reducing agents, and considerably less sediment is formed. It is, therefore,

possible to dye a much larger quantity of cotton in a shorter time, in this type of vat. The vat is prepared in the following manner :—Heat the water in the vat to 122° F., add the bran, the flour and the soda. Fermentation will have commenced in about 8 to 10 hours. Now add the reduced indigo, sharpen with lime or soda, allow to rest for 1 to 1½ hours, and begin with the dyeing.

Indigo may be added twice per day. About half the quantities of reducing agents required to dissolve the indigo which has been oxidised during dyeing in an ordinary vat, is required in this type of vat.

The working of the fermentation vat may be still further simplified if *Indigo MLB/W* is used in place of indigo. It may be added to any vat during fermentation, and dyeing may be commenced after 1 to 2 hours, or as soon as the vat has settled.

Indigo MLB/W is best made into a paste with old vat liquor or with water. The paste is added to the vat, stirred and sharpened with 10 per cent. (of the weight of indigo used) of lime ; 200 to 300 grms. of treacle are added in the evening to the vat. When setting a new vat, some of the sediment from an old vat, and treacle, bran, bread, lime, etc., are first added to the water. As soon as the vat begins to ferment the indigo is added, and the liquor sharpened with the necessary quantity of lime.

The following special indigo derivatives have been introduced by the Hoechster Farbwerke: *Indigo MLB/R, MLB/RR, MLB/T.* Clearer, brighter and redder shades of blue are obtained with MLB/R and MLB/RR as compared with *Indigo MLB.* The three brands are less suited for dyeing in the copperas vat than in the hydrosulphite and zinc-lime vat. They may, however, be used in the fermentation vat.

MLB/T gives greener shades than MLB, and it is particularly suited for dyeing vegetable fibres. The shades are faster to chlorine and to washing than similar shades obtained by dyeing with ordinary indigo.

The method of application is the same as that given for Indigo MLB.

The Badische Anilin und Soda Fabrik have introduced various brands of Indigo which differ from *Indigo pure.*

Indigo G gives greener shades which are particularly fast to chlorine. *Indigo RBN* is specially recommended for bright

The Fermentation Vat.

—	Indigo. 60 % Lbs.	Indigo powder B.A.S.F. 20 % paste. Lbs.	Indigo MLB pure 20 % paste. Lbs.	Indigo MLB Vat II, 20 % Lbs.	Bran. Lbs.	Soda. Lbs.	Madder. Lbs.	Slaked lime. Lbs.	Woad. Lbs.	Treacle. Lbs.	Potassium carbonate. Lbs.	Flour. Lbs.
1. —	7	—	—	—	10	—	5	$\frac{3}{4}$	6	—	14	—
2. Hummel	10	—	—	—	60	20	—	5	—	—	—	—
					100							
3. Hummel	10	—	—	—	—	20	—	5	—	10—15	—	—
4. Hummel	10	—	—	—	2—5	—	2—5	—	—	—	10—15	—
5. B. A. & S. F.	7	20	—	—	10	10	7	—	—	—	—	—
6. M. L. & B.	—	—	25	—	12	12	8	—	—	—	—	—
7. M. L. & B.	—	—	—	8	8	2	—	—	—	—	—	2
8. Delmart	$10\frac{1}{2}$	—	—	—	45	60	27	6	168	24	—	—
9. Hummel	10	—	—	—	7	—	$1\frac{1}{4}$—10	8	200	—	—	—

reddish-blue shades, which are purer and faster to washing, light, etc., than ordinary indigo.

The *Indigo S* brands (with the exception of *Indigo SB paste*) are particularly useful for dyeing in the fermentation vat.

The fastness of indigo may be improved by an after-treatment with a solution of copper sulphate and acetic acid, and it has already been stated that glue may be used for the same purpose.

Mercerised cotton shows a greater affinity for indigo than ordinary cotton. In order to save indigo, G. Tagliani has suggested the printing of thickened caustic soda lye of 52° to 64° Tw., on one side of the cloth. The mercerised side dyes a much darker shade in the indigo vat than the other side. A similar effect can be produced by stretching two pieces back to back on the dipping frame and by dyeing them in the dipping vat.

A number of the direct dyeing cotton dyestuffs and of the sulphur dyestuffs may be employed as a *bottom* for indigo.

Indigo blue dyed cotton is also sometimes *topped*, especially with the basic cotton dyestuffs. For this purpose the goods, after having been dyed in the vat, are mordanted with tannin, which

is fixed with an antimony salt. They are finally dyed with the basic dyestuff in the ordinary manner.

Very reddish shades, which, however, are not fast to washing, may be obtained by steaming, after dyeing with indigo.

In order to produce dull shades of blue, the Hoechster Farbwerke recommend passing the goods, before dyeing in the vat, through a solution containing 1 to 1½ lbs. of starch per 100 gallons of water.

Very heavy indigo blue shades are obtained by dyeing the cotton first with a very weak Aniline black. The following is a method which has been largely used in practice :—

For 100 *lbs. of Cotton Yarn.* The boiled yarn is worked for 1 hour at 100° F., in a bath containing 3 lbs. 8½ ozs. aniline salt, 3 lbs. 8½ozs. sodium bichromate, and 7 lbs. hydrochloric acid.

The yarn is well wrung and treated in a fresh bath for ½ hour, at 100° F., with 1 lb. 4 ozs. soda ash. Then rinse twice, wring well, or hydroextract. The yarn is now ready for dyeing in the indigo vat. Very heavy "coppery" blues are obtained by this method with a comparatively small amount of indigo.

In place of Aniline black, a light shade of manganese bronze may also be used as a bottom for indigo.

Indophenol (DH), can be reduced like indigo and dyed from a vat. The Author has had experience with copperas vats in which ten parts of indigo were used along with one part of Indophenol. It was found that the shades, when leaving the vat, were superior to those obtained with indigo alone, but the loss in depth and richness during the subsequent process of souring was much greater.

Further, the indigo-indophenol vats could not be as readily exhausted as pure indigo vats.

The Indanthrene Dyestuffs.

The *Indanthrene Dyestuffs* of the Badische Anilin und Soda Fabrik are dyed on cotton yarn in the following manner. The yarn is boiled out with soda ash, with or without the addition of Turkey-red oil. For dyeing 100lbs. of yarn fill the dye-vessel with about 225 gallons of water, then add 4½ gallons of caustic soda lye 53° Tw., heat to 140° F (when dyeing *Indanthrene Blue GC, GCD, RC,* heat to 122° F.), skim

off any precipitate which may have formed, add the necessary quantity of hydrosulphite (either in powder form or previously dissolved in about ten times its weight of cold water) and finally add through a sieve the dyestuff which has been made into a thin paste with 5 to 10 times its weight of hot water. Allow the vat to rest until the dyestuff has been completely dissolved. Pale shades should be dyed at 104° F. In order to obtain level shades it is advisable to use bent sticks similar to those used in dyeing the sulphur dyestuffs, but in place of the iron gas piping usually employed, sockets of iron into which an ordinary wooden dye stick is fitted are recommended. The thoroughly wetted out yarn is entered into the vat, quickly turned 4 times, the dye-bath is then heated during 15 minutes to 140° F. or 122° F. respectively. During this time the yarn should be turned constantly. Finish by working for 15 minutes at this temperature.

Dark shades are dyed by entering the yarn into the hot vat (140° or 122° F.) and turning for ¾ to 1 hour as usual. The yarn is then lifted out, allowed to drain, rinsed in a bath containing 2 ozs. of hydrosulphite conc. B.A.S.F. powder, per 100 gallons, rinsed twice, given 3 or 4 turns in a bath containing 1 to 1½ pints of sulphuric acid per 100 gallons of water, rinsed and finally soaped warm or at the boil.

When preparing a fresh vat, 2 gallons of caustic soda lye, 53° Tw., should be added per 100 gallons of liquor, and the amount of hydrosulphite should be ¼th of that of the dyestuff used. In no case must it be less than 1 lb. nor more than 4 lbs., per 100 gallons of liquor.

A hydrosulphite solution which will keep for some time may be prepared by slowly adding 10 lbs. of hydrosulphite conc. B.A.S.F. powder into 7½ gallons of cold water. As soon as dissolved add 3¾ pints caustic soda lye 53° Tw.

From ½ to 50 per cent. of the ordinary paste colours, calculated on the weight of cotton to be dyed, is used, whilst when employing the powder brands from 10 to 12½ per cent. will be sufficient for heavy shades.

The dye-bath is usually not exhausted when dyeing heavy shades. It may be used repeatedly, but ⅙ to ⅕ of the caustic soda originally used should be added first, and afterwards the necessary quantity of hydrosulphite and dyestuff.

Dissolving of the powder brands :—Stir up 1 part of dyestuff

with $\frac{2}{3}$ parts of caustic soda lye 53° Tw., and with the necessary quantity of hydrosulphite. Allow to stand for 15 minutes, dilute with 20 times the amount of water at 140° F. (or 120° F.). The remainder of the caustic soda and of the hydrosulphite is added to the dye-bath, and the stock vat is ultimately introduced through a sieve.

Shades dyed with some of the Indanthrene dyestuffs are brightened by soaping at 140° F., with 3 to 5 lbs. of soap per 100 gallons of water.

The fastness to chlorine of *Indanthrene Blue RS* is considerably improved by steaming the yarn after soaping, and before rinsing, for 2 to 3 hours at a pressure of 15 lbs.

Cotton piecegoods may be dyed in an *under-water jigger*, see Fig. 63. For dyeing 65 lbs. of cloth, 90 gallons of water and $1\frac{3}{4}$ to $2\frac{1}{4}$ gallons of caustic soda lye 53° Tw., are required. The goods are dyed for 1 to $1\frac{1}{2}$ hours at 122° to 140° F., with the addition of the necessary amount of hydrosulphite. After dyeing rinse in a bath containing $2\frac{1}{2}$ ozs. of hydrosulphite powder per 100 gallons of liquor, wash free from soda, sour with 1 to 2 pints of sulphuric acid, per 100 gallons of water, rinse, and soap at the boil.

The fastness of shades dyed with *Indanthrene Yellow* can be considerably improved by soaping at the boil for $\frac{1}{2}$ hour or by steaming.

In order to oxidise the dyestuff more rapidly after dyeing, 5 to 8 ozs. of potassium bichromate should be added per 100 gallons of souring liquor. This aids in producing more level shades, and it also increases the fastness of the shades to soap.

Piecegoods may also be dyed by padding with the paste colours. The powder brands cannot be used for this purpose. The pieces are dried or batched after padding.

Preparation of the padding liquor:—1 to 20 lbs. of the dyestuff paste are carefully mixed with $12\frac{1}{2}$ to 15 lbs. of gum-thickening (1 : 1) and made up with water to 10 gallons. Filter through a cotton cloth, pad and develop for $\frac{1}{2}$ to $\frac{3}{4}$ hour in an ordinary jigger, nearly filled with water, containing $2\frac{1}{2}$ gallons caustic soda lye 53° Tw., and $1\frac{1}{4}$ to $1\frac{1}{2}$ lbs. hydrosulphite powder per 100 gallons of water. The goods are finally given two ends in water containing 3 ozs. hydrosulphite powder per 100 gallons, rinsed, soured with 1 to 2 pints of sulphuric acid,

168° Tw., per 100 gallons, thoroughly rinsed and soaped at the boil.

The Indanthrene dyestuffs may also be dyed in the *dipping vat.* For this purpose the goods are well boiled, dried, stretched on the dipping frame and immersed into the well stirred vat at 160° to 180° F. for 10 to 20 minutes. The frame is then raised and placed into water without delay. After the goods have been slightly rinsed, they are removed from the frame and soured with ½ gallon sulphuric acid per 100 gallons of water, rinsed and soaped at the boil. Deep shades may be produced by giving several dips.

The stock vat is prepared in the following manner:—Mix 10 lbs. *Indanthrene Blue RS paste* with 2 gallons caustic soda lye 53° Tw., and then add, whilst stirring well, solutions of 5 lbs. 10 ozs. copperas in 1½ gallons water, and 1¼ lbs. tin crystals in 2 pints of water. Stir up well and allow to stand for ½ hour. Heat the dye-bath to 160° to 180° F., add the caustic soda lye and the required quantity of stock vat. The following quantities are used.

Indanthrene Blue RS, per 10 gallons	½ lb.	1 lb.	1½ lbs.
Water	92½ gallons	91 gallons	89½ gallons
Caustic soda 53° Tw.	5 gallons	4 gallons	3 gallons
Stock vat	2½ gallons	5 gallons	7½ gallons

Some of the Indanthrene dyestuffs and *Anthraflavone G paste,* may be dyed with the addition of caustic soda, hydrosulphite, and Glauber's salt.

The goods are dyed for ½ to 1 hour at 104° to 122° F., rinsed in a bath containing 1½ to 2 ozs. Hydrosulphite conc. B.A.S.F. powder per 100 gallons of water, soured with 1 pint sulphuric acid per 100 gallons water, rinsed and soaped at the boil.

For 100 lbs. of cotton yarn:—330 gallons water, 13 pints caustic soda lye, 53° Tw., 20 to 50 lbs. Glauber's salt, 3¾ to 7½ lbs. Hydrosulphite powder. Then make 5 to 30 lbs. of the dyestuff into a paste with about 10 times its weight of hot or cold water, and add it through a fine sieve to the vat.

The Algole Dyestuffs.

Algole Blue CF paste, 3G paste, Algole Green B paste, Leucole Dark Green B paste of the Bayer Company, are dyed at 100° to

140° F., with the addition of hydrosulphite and caustic soda, the quantities of which are calculated both on the volume of liquor and the quantity of dyestuff used.

Per 100 gallons of liquor:—

	1 to 10 per cent. shades.	11 to 20 per cent. shades and heavier.
Caustic soda 53° Tw. .	1½ gallons	2 gallons
Hydrosulphite 27° Tw.	2 gallons	3—4 gallons

Heat the dye-liquor to 100° to 120° F., add the caustic soda and then the hydrosulphite solution. After this, the dyestuff which has been stirred up with a little water is added through a sieve. The liquor is then well stirred until the dyestuff has been completely dissolved.

The thoroughly wetted out yarn is entered and worked for 10 minutes at 120° F. The temperature of the dye-bath is raised to 140° F., in about 10 to 15 minutes and the yarn is worked at this temperature for ½ to ¾ hour.

Algole Blue 3G paste should be dyed at a temperature of 100° to 120° F.

After dyeing, the yarn is squeezed and immediately rinsed in a bath containing 1½ to 3¼ gills of hydrosulphite solution, 27° Tw.

The yarn has finally to be soured, thoroughly rinsed and soaped either warm or at the boil.

In order to obtain clear shades the souring bath should be prepared in the following manner:—For *Algole Blue 3G paste* use 1 gallon, for all the other *Algole* and *Leucole Dyestuffs*, 1½ gills of sulphuric acid 169° Tw. per 100 gallons of water.

Algole Blue CF paste, *Leucole Dark Green B paste* and *Leucole Brown B paste* may also be dyed with the addition of caustic soda, and dextrine or glucose.

For the dyeing of *Alizarine Indigo paste* or *powder*, the following method is recommended: In order to dissolve the dyestuff, mix 2 lbs. *Alizarine Indigo powder*, or 10 lbs. *Alizarine Indigo paste*, into a paste with 2⅖ to 4 pints glue solution (1 : 5), until the dyestuff is thoroughly wetted out. Whilst stirring well add 3⅕ pints caustic soda lye 52° Tw., and 5 gallons of water at 120° to 140° F., and finally sprinkle in little by little, 3 lbs. Hydrosulphite B.A.S.F. conc. powder. After about 20 minutes stirring the dyestuff will be dissolved and the dye-bath should then be of a yellowish colour.

The dye-vat is prepared in the following manner:—Add 4 ozs. Hydrosulphite conc. B.A.S.F. powder and $\frac{1}{10}$ pint caustic soda lye 52° Tw., to 200 gallons of water at 160° F. After this the dyestuff solution is added, and if a slight residue is left stir up with glue solution and rinse out with dye-liquor.

Enter the material at 160° F., and work, immersed in the liquor, without steam, for $\frac{3}{4}$ to 1 hour. After dyeing wring or squeeze, in the case of yarn shake well on the wringing post, expose to the air for $\frac{1}{4}$ hour, rinse and soap in a strong soap bath at the boil.

The other Algole dyestuffs are applied in the following manner.

Dissolving of the Dyestuff.—Mix the dyestuff with warm water, add the quantities of caustic soda and hydrosulphite required for the preparation of the vat, stir and allow to stand for a short time until the solution becomes clear. *Algole Grey* should be stirred up with cold water.

Two or more dyestuffs, if used in combination, should be dissolved together.

Preparation of the Vat.—It may be advisable, for light shades especially, to add per 100 gallons of liquor $\frac{1}{4}$ gill to $\frac{9}{10}$ gill caustic soda 52° Tw., and 2 ozs. Hydrosulphite conc. powder.

The Glauber's salt should be previously dissolved in the liquor and the dyestuff solution should be added through a sieve. The quantities of dyestuff (per cent.), and of caustic soda, hydrosulphite and Glauber's salt required to prepare 100 gallons of dye-liquor are given in the table on p. 303.

The proportion of dye-liquor to cotton should be 20 : 1. Yarn is dyed for $\frac{3}{4}$ to 1 hour at the usual temperature, either on straight or bent sticks. After dyeing wring, expose to the air for $\frac{1}{4}$ to $\frac{1}{2}$ hour, rinse, sour with $1\frac{1}{2}$ to $3\frac{1}{4}$ gills sulphuric acid 168° Tw., per 100 gallons of liquor, rinse and soap.

The clearest shades with *Algole Scarlet G* and *Algole Pink R* are produced if the yarn, after having been levelled on the post, is immediately rinsed and the soda neutralised with acid, rinsed and ultimately soaped at 120° F. All the other Algole dyestuffs are soaped at the boil. *Algole Red R extra* should be soaped very strongly in order to obtain a clear shade.

Brome Indigo FB paste.—Dissolving of the dyestuff:—Stir up 1 lb. of dyestuff paste with 1 gallon hot water. To this add 10 ozs.

Dyestuff paste. Per cent.		Caustic soda 52° Tw. Gallons.	Hydrosulphite conc. powder. Lbs.	Glauber's salt. Lbs.
Algole Yellow 3 G. R	2	0·2	3	20
	5	0·2	3	40
	10	0·28	3·6	60
Algole Orange R	2	0·4	3	20
	6	0·4	3	40
	12	0·5	4	60
Algole Red 5 G and Algole Scarlet G	3	0·45	3	30
	9	0·58	3·6	60
	20	0·7	4	120
Algole Pink R	0·5	0·2	3	30
	2	0·25	3	60
	8	0·33	3·6	120
Algole Red B	2	0·55	3	20
	6	0·58	3·6	40
	12	0·69	4·8	60
Algole Red R extra	1·5	0·25	3	20
	4	0·28	3	40
	10	0·4	4	80
Algole Bordeaux 3 B	5	0·35	3	30
	12·5	0·48	3·6	80
	25	0·64	4·8	120
Algole Grey B	5	0·25	3	40
	10	0·38	3·6	60
	20	0·59	4·8	100

caustic soda lye 52° Tw., and then $7\frac{9}{10}$ ozs. hydrosulphite, 27° Tw. Stir slowly until the solution is a clear golden yellow.

The dye-vat :—In order to keep the dye-vat in a good condition, especially when dyeing light shades, the addition of $3\frac{1}{4}$ gills of hydrosulphite and $1\frac{1}{2}$ gills of caustic soda 52° Tw., may be found necessary. During dyeing the liquor in the vat must always be of a clear golden-yellowish shade. If the shade flattens, hydrosulphite and a small quantity of caustic soda should be added.

Cotton yarn should be dyed at 120° to 140° F., on bent sticks, for $\frac{1}{2}$ to 1 hour. When dyeing light shades enter the yarn at a lower temperature and raise gradually to 120° to 140° F. Immediately after dyeing squeeze, level and allow to oxidise by exposure to air.

According to another method the yarn is only slightly rinsed after dyeing, then exposed to the air for $\frac{1}{2}$ hour, soured in a hot bath containing $1\frac{1}{2}$ gills of sulphuric acid per 100 gallons of liquor, subsequently thoroughly rinsed and soaped near the boil.

The Thio Indigo Dyestuffs.

The *Thio Indigo Dyestuffs* of Kalle & Co., are dyed according to the methods used for dyeing indigo. For the purpose of transforming these dyestuffs into their leuco-derivatives the hydrosulphite vat is best suited. A stock vat is prepared by mixing the dyestuff with water, caustic soda lye, hydrosulphite, and, if necessary, some *Monopole-brilliant-oil* or *Puropol.* Some of the dyestuffs are reduced at ordinary temperature, whilst others require heating to about 70° C.

The stock dye-vat is prepared in the following manner:—Mix 50 kilos. *Thio Indigo Red B paste* with 200 litres water. Then add 250 litres hydrosulphite, 25° Tw., heat to 95° to 104° F., and after stirring for ½ hour add 10 litres caustic soda lye 76·6° Tw., or 15 kilos. soda ash, dissolved in 100 litres water. Stir until the dyestuff is completely reduced, when the solution will be of a yellow colour, and make up with water to 1,000 litres.

A dye-vat of 1,000 litres is prepared in the following manner:—To 800 litres of water of 68° to 75° F., add 3 to 5 litres hydrosulphite, 25° Tw., stir and add 200 litres of the stock vat. Stir gently, allow to stand for about ½ hour, when the vat should be in condition for dyeing. During continuous dyeing, the necessary quantity of stock vat and hydrosulphite must be added from time to time.

Preparation of the Hydrosulphite.—Dilute 100 litres, or 135 kilos., of bisulphite 71·4° Tw., with 60 litres water; slowly stir into this 13·5 kilos. zinc dust which has been previously made into a paste with 15 litres water. The temperature should be kept below 86° F. Allow to stand for 2 hours. Mix into the clear solution 50 litres milk of lime, 20 per cent., allow to stand for 6 to 12 hours and decant the clear liquor, which should be 25° to 26° Tw.

Thio Indigo Red B may also be dyed in the copperas vat.

Preparation of the Stock Vat.—Stir 50 kilos. dyestuff with 200 litres water, add 50 kilos. copperas dissolved in 200 litres water and 300 kilos. milk of lime, 20 per cent., and 200 litres water, make up to 1,000 litres. Stir until solution is complete. A dye-vat of 1,000 litres is prepared by mixing 200 litres of the stirred-up stock vat with 800 litres of water, 68° to 75·2° F.

Thio Indigo Red may also be used according to the methods employed for dyeing the sulphur dyestuffs.

Useful shades may be obtained by using Thio Indigo Red B together with indigo. Stock vats are prepared by mixing 50 kilos. *Thio Indigo Red B* or 50 kilos. *Indigo paste* 20 *per cent.*, with 100 litres water. To this are added 12·5 litres caustic soda lye 40° Bé., and gradually 10 kilos. hydrosulphite powder. The whole is heated to 50° to 60° C., until solution has taken place and made up with water to 1,000 litres.

A dye-vat of 1,000 litres is prepared in the following manner :—960 litres water, 20° to 25° C., 20 kilos. common salt, 100 to 150 grms. hydrosulphite powder, 50 to 75 c.c. caustic soda lye 40°Bé. Stir and add after ½ to 1 hour 20 litres of the stock vats in the proportion required.

Thio Indigo Scarlet R in paste is dyed according to the method given for Thio Indigo Red.

The following directions are given for dyeing *Thio Indigo Scarlet 2G paste* and *Thio Indigo Red B paste* on cotton yarn :—10 lbs. of the dyestuff are mixed with 2 pints of caustic soda lye 76·6° Tw., and 28 pints of cold water; 2 lbs. hydrosulphite powder are gradually added. During the first hour the liquor is stirred several times, then allowed to stand for 4 to 5 hours or overnight, and made up with water to 1,000 litres. The reduction is completed more quickly if the liquor is heated to 122° F.

Preparation of a dye-vat of 100 *gallons.*—Add 1¾ to 2½ ozs. hydrosulphite and ⅛ to ¼ gill caustic soda lye 76·6° Tw., to about 90 gallons of cold water. Stir up, and after ½ to 1 hour add the necessary quantity of stock vat which has previously been well stirred up. Stir gently but thoroughly, allow to stand for a short time, and commence the dyeing operation. The dyestuff exhausts more rapidly if an addition of 20 to 40 lbs. of common salt, or Glauber's salt is made to 100 gallons of dye-liquor. After dyeing squeeze or wring and expose to the air, finally rinse and soap at the boil.

When small quantities of yarn have to be dyed, the preparation of a stock vat can be dispensed with, and the dyestuff may be reduced in the dye-vat itself. If weak vats are used which contain less than 5 lbs. of dyestuff per 100 gallons, the quantity of hydrosulphite and of caustic soda lye added should not be less than that used for a vat containing 5 lbs. of dyestuff per

100 gallons. Heat the water in the vat to 122° F., then add the necessary quantities of caustic soda lye and of hydrosulphite, stir gently and add the dyestuff which has been previously well mixed with water. Stir up and allow to stand until reduction is complete. The vat must be clear and of a deep violet colour. However small the quantity of dyestuff used, 100 gallons of the dye liquor must contain not less than $4\frac{1}{6}$ gills caustic soda lye and 1 lb. hydrosulphite.

Dyestuffs in powder form may be used in place of the pastes. The powder should be moistened with alcohol or with Turkey-red oil, and then carefully made into a paste with 5 times its weight of water.

The Ciba and Cibanone Dyestuffs.

The Society of Chemical Industry (Basle) gives the following instructions as regards the application of the *Ciba and Cibanone Dyestuffs.*

The *Ciba Dyestuffs* belong to the *Indigo* and *Thio-Indigo*, the *Cibanone Dyestuffs* to the *Anthraquinone series.* The two classes of dyestuffs may be used in combination, but the stock vats should be prepared separately. Special care must be exercised in order to obtain level dyeings, because the affinity of the different dyestuffs for the cotton fibre is not the same. For the purpose of dissolving the Ciba dyestuffs, 1 lb. of the dyestuff is made into a paste with $1\frac{3}{4}$ lbs. of caustic soda lye 66° Tw., and a small quantity of hot water. $1\frac{3}{4}$ lbs. of caustic soda lye 66° Tw. is mixed with $1\frac{1}{2}$ gallons of cold water, and to this is slowly added, with constant stirring, $3\frac{1}{2}$ lbs. hydrosulphite powder (80 to 85 per cent.). This solution is added to the dyestuff paste along with about 4 gallons of hot water, per pound of dyestuff, and the temperature is then slowly raised to boiling point. *Ciba Red G* should be reduced at 140° to 160° F., *Ciba Scarlet G* at 100° to 120° F. They should then be boiled. The addition of $\frac{1}{2}$ lb. of alkaline Turkey-red oil or Monopole soap per 100 gallons of liquor is recommended in order to obtain better penetration. The material should be well squeezed or wrung after dyeing, and allowed to oxidise in the air for 15 to 30 minutes, rinsed thoroughly and developed by soaping at the boil for $\frac{1}{2}$ hour with 2 to 4 lbs. of soap, and 1 to 2 lbs. of soda ash per 100 gallons of liquor.

Ciba Red and *Ciba Scarlet* may be developed in a cold solution of bleaching powder of 0·7 to 1·4° Tw. The material is then rinsed and passed through a weak solution of sodium bisulphite. Cops, cheeses, etc., which have been dyed in special apparatus should be treated for ½ hour at 175° F. in a bath containing ½ to 3 per cent. of bichrome and ½ to 2 per cent. of acetic acid (calculated on the weight of material) and afterwards thoroughly rinsed.

Additions which have to be made to the dye-bath for dyeing heavy shades with the Ciba Dyestuffs.

(For 1 Part of Dyestuff.)

Ciba Dyestuff.	Sodium hydrosulphite powder.	Caustic soda lye, 66° Tw.	Per 100 gallons of liquor.	Temperature, °F.
Blue 2 B, Green G, Violet B, R	2	2	½ lb. alkaline Turkey-red oil or Monopole soap	140—160
Bordeaux B, Heliotrope B	2	2	½ lb. alkaline Turkey-red oil or Monopole soap.	100—120
Red G	2	2	½ lb. alkaline Turkey-red oil or Monopole soap, and 40 lbs. each of glucose and common salt	100—120
Scarlet G	2	2	½ lb. Turkey-red oil and 30 lbs. common salt	100—120

The stock vat for *Ciba Bordeaux* must be boiled, that for *Ciba Red* heated to 140° to 160° F., and for *Ciba Scarlet* to 100° to 120° F.

The following method is recommended for dyeing 100 lbs. of cotton yarn with the *Cibanone Dyestuffs in powder*:—Dye-liquor, 200 gallons. 2 lbs. of the powder are made into a paste with 22 lbs. of caustic soda lye, 66° Tw., and 5½ gallons of hot water, and then mixed with 2 lbs. sodium hydrosulphite powder (80 to 85 per cent.). The mixture is slowly heated to 140° F., and allowed to stand for 15 to 30 minutes. (For dyestuffs in paste form only one-tenth of the quantity of hydrosulphite given above will be required.) Heat the dye-bath to 140° F., add 22 lbs. caustic soda lye, 66° Tw., 2 lbs. hydrosulphite

and 20 lbs. common salt. The solution of the dyestuff is then slowly added through a sieve. The goods should be immersed in the dye-vat at 140° F. for 45 minutes, wrung, exposed to the air for ½ hour, rinsed and soaped.

Cibanone Yellow and *Orange* may be developed with bleaching powder solution like *Ciba Red.*

The Helindone Dyestuffs.

The following instructions are given for dyeing the *Helindone Dyestuffs* of Meister, Lucius and Brüning:—Hard water should be corrected by adding 3 to 5 ozs. of Solvay soda and 3 ozs. of hydrosulphite conc. powder, to every 100 gallons of water. Allow to settle and use the clear water. The stock vats are prepared by making the dyestuff (1 part) into a paste with warm or cold water (20 to 50 parts), then adding caustic soda lye, 76° Tw. (2 to 10 parts), and *Turkone oil N* (½ to 2 parts). The hydrosulphite conc. powder (1 to 4 parts) is then added gradually, while stirring constantly. The vat is best prepared at a temperature of 100° to 140° F., and it should be ready for use in from 15 to 30 minutes.

In the following table the quantities (parts) required to reduce 10 parts of the paste dyestuff are given:—

Helindone Dyestuff. (paste).	Water.	Caustic soda 76° Tw.	Soda ash.	Turkone oil N.	Hydrosulphite conc. powder.	Temperature for reduction. ° F.	Temperature of dye-vat. ° F.
Yellow 3 G, N	40	7	—	—	4	60–100	60–80
Orange R	20	1⅓	1	—	1	140	90–110
Orange GRN	60–80	5–6	—	—	3	ordinary	ordinary
Scarlet S	20	2⅓	—	½	1·2	120–140	60–80
Fast Scarlet R	30	2¾	—	1	1½	140–160	140
Red B, 3 B	50	5½	—	2	2½	140	140
Pink B	50	8–11	—	6–8	4	120–140	110
Pink AN, BN	120	5⅓	—	3	2	140–160	105–120
Brown G	40	2⅔	—	1	1¼	120	110
Brown 3 G, N	40	7	—	—	4	80–100	60–80
Brown RR, 5 R.	50	2¾	—	1	1½	104	104–140
Brown AN	50	8	—	—	2	140	140
Green G	50	4	—	—	2	133–140	120–140
Blue 3 G, N	50	2¾	—	—	1½	120	—
Violet B, R	200	5½	—	3	4	120–140	100–120
Violet BB, B	100	4	—	6	3	131–167	104

Green G requires the addition of 10 parts of a solution of glue (1 : 10).

When dyeing with different dyestuffs in the same vat, the stock vats should be prepared separately and mixed in the dye-vat. The solution of the dyestuff is added through a fine sieve to the water in the vat, which should have a temperature of 60° to 140° F. Bent sticks are recommended for dyeing, and the yarn should be turned 3 to 4 times during ½ hour. After dyeing wring over the vat, allow to oxidise, and soap at the boil for ¼ to ½ hour in a solution of 2 parts of soap or 2 parts of soap and 1 part of soda per 1,000 parts of water; rinse and dry.

Helindone Yellow and *Helindone Brown* are dyed with the addition of common salt or Glauber's salt.

The Hydron Dyestuffs.

The *Hydron Blues* of Leopold Cassella & Co. are dyed on cotton yarn in the following manner:—

	Starting bath. Per cent.	Additions for subsequent lots. Per cent.
Dyestuff in paste (20 per cent.) .	2—30	2—24
Hydrosulphite conc. powder .	2—15	1—12
Caustic soda lye, 75° Tw. .	2—15	1— 8

Proportion of yarn to liquor, 1 : 20.

Heat the bath to about 120° to 140° F., add the caustic soda lye and the dyestuff, gradually stir in the hydrosulphite either in powder form or, better, dissolved in cold water, stir well until the dyestuff has been completely reduced. Dye for ½ hour at 120° to 140° F., preferably on bent sticks, squeeze or wring, expose to the air, and rinse. The yarn should finally be soured with sulphuric acid, thoroughly rinsed and soaped.

Piecegoods may be dyed in the jigger which should be provided with squeezing rollers. Dye for ½ to ¾ hours at about 140° F., squeeze, give an air passage in order to oxidise the dyestuff, and rinse, first in acidulated water and finally in pure water.

PART XIV

MORDANT DYESTUFFS

(1) Dyed on aluminium mordant.
(2) Dyed on iron mordant.
(3) Dyed on chromium mordant.

Yellows and Oranges.

(1, 2, 3) Alizarine Orange (Ba., ML., Sa.).
(3) Alizarine Yellows (By., Cl., ML., Sa.).
(1, 3) Anthracene Yellow paste C (By., Ca.).
(3) Azo-Alizarine Yellow RFS powder, 6G powder (DH.).
(3) Chrome Yellows (By.).
(3) Diamond Flavine G (By.).
(3) Diamond Orange paste (By.).
(3) Diamond Yellow G paste (By.).
(3) Galloflavine paste (Ba.).
(3) Mordant Yellow (Ba.).

Reds.

(2) Alizarine 1B extra in paste (By.).
(3) Alizarine Bordeaux G, GG (By.).
(1, 3) Alizarine Garnet (ML.).
(1) Alizarine Maroon (Ba.).
(1, 3) Alizarine Purpurine (By.).
(1, 3) Alizarine Reds (Ba., By., ML., BAC.).
(3) Brilliant Alizarine Bordeaux R paste (By.).
(3) Chrome Rhodine J powder, B powder (DH.).
(1) Purpurine (Ba.).

Blues and Violets.

(3) Alizarine Blues (Ba., By., ML.).
(2) Alizarine Blue S extra paste (By.).
(3) Alizarine Bordeaux B paste (By.).
(1, 3) Alizarine Cyanine GG, R, R extra paste, 3R double paste (By.).
(1) Alizarine Cyclamine R paste (By.).
(1, 3) Alizarine Heliotrope R paste (By.).
(3) Alizarine Indigo Blue S (Ba.).
(2) Alizarine paste, VI new, V2a blueish (Ba.).
(1, 3) Alizarine Sapphirole SE (By.).
(1, 3) Anthracene Blue (Ba.).
(3) Brilliant Alizarine Blue G, R, SD (By.).
(1, 3) Celestine Blue (By.).
(1, 2) Chromacetine Blue S powder (DH.).
(3) Chromazurine G, E powder (DH.).
(3) Chrome Violet paste (By.).
(3) Chromoglaucine (ML.).
(1, 2, 3) Coreine ARN, RR65 powder (DH.).
(3) Delphine Blue (By., Sa.).
(1, 3) Gallamine Blue paste (By.).
(3) Galleine (Ba., By., ML.).
(1, 3) Gallocyanine paste (Ba., By., CI., DH., Sa.).
(3) Indochromine (Sa.).
(1, 2, 3) Leman Blue powder (DH.).
(1, 2) Modern Blue CVI powder (DH.).
(1, 2, 3) Modern Violet paste and powder (DH.).
(3) Phenocyanine TV powder, R, B, and VS paste (DH.).

(3) Philochromine (ML.).
(3) Printing Violet R (Ba.).
(1, 3) Prune Pure (CI., Sa.).
(3) Rhine Blue paste and powder (DH.).
(3) Ultra Cyanine (Sa.).
(3) Ultra Violets (Sa.).
(1, 2, 3) Violet PDH powder (DH.).

GREENS.

(3) Alizarine Green (Ba., ML.).
(3) Alizarine Viridine DG, FF (By.).
(3) Brilliant Alizarine Viridine F paste (By.).
(3) Chrome Green CGN powder (DH.).
(3) Coeruleine (ML.).
(1, 3) Coeruleine S paste (Ba., By.).
(3) Green TCR powder (DH.).
(2) Solid Green (ML.).

BROWNS.

(1, 2, 3) Alizarine Browns (ML., Poir.).
(3) Alizarine Oranges (Ba., By.).
(1, 3) Anthracene Browns (Ba., By.).
(2) Anthracene Brown R paste (By.).
(3) Brown TCR powder (DH.).
(3) Diamond Brown paste (By.).

BLACKS.

(3) Alizarine Black S (Ba.).
(3) Alizarine Blue Blacks (Ba., By.).
(1, 3) Alizarine Cyanine Black G paste (By.).
(3) Alizarine Fast Grey SP, T (By.).
(3) Naphthomelan (Ba.).

THE *Mordant Dyestuffs*, the chief representatives of which are the *Alizarines*, are fixed on the fibre with the aid of metallic mordants. The colour lakes, when formed on the fibre, of most of these dyestuffs, are very fast to light, washing, soap, acids and alkalies. The mordant dyestuffs are used very extensively in yarn and piece dyeing, but only rarely in dyeing cops and cheeses.

APPLICATION OF THE MORDANT DYESTUFFS.

On cotton the mordant dyestuffs are chiefly dyed on an aluminium mordant. Chromium and iron mordants are less extensively used. The principal application of the *Alizarines* is in the dyeing of *Turkey-red* (*Adrianople Red*), for which purpose in former times *madder* was extensively employed.

The fastest shades of Turkey-red are produced by the *old process* of dyeing, although this entails a larger number of operations than the *new process*.

In the latter process Turkey-red oil is used, whilst in the former the material is oiled with an emulsion of *rancid olive oil* (*tournante oil*) in water, with the addition of a small quantity of potash.

Turkey-Red (Old Process).

The following method is recommended by Farbwerke vorm. Meister, Lucius and Brüning, for dyeing with *Alizarine paste*, 20 *per cent.*, and *Alizarine Red No.* 1.

Yarn Dyeing.

(1) *Boiling.*—Boil under pressure with 3 per cent. soda ash, rinse, and hydroextract.

(2) *First Oiling (Green Liquor).*—The moist yarn is oiled with an emulsion of 100 parts of rancid olive oil per 1,000 parts of liquor, to which potash is added until it shows a specific gravity of 9° Tw., afterwards allowed to lie in heaps for 24 hours, and dried within 12 hours at 149° F.

(3) *Second Oiling.*—Oil a second time with 40 parts rancid olive oil and 80 parts Turkey-red oil per 1,000 parts of liquor which is made up with potash to 6° Tw. Allow to hang in the air for 4 hours and dry within 12 hours at 149° F.

(4) *Third Oiling.*—Dilute the liquor from the third operation with water and a solution of potash to 5° Tw. Impregnate the yarn with this liquor, hang in the air for 4 hours, and dry at 149° F.

(5) *First Soaking.*—Soak the yarn for 3 hours in a solution of potash, 1° Tw. at 86° F., hydroextract, and dry at 149° F.

(6) *Steeping.*—Steep the yarn in water at 86° F., for 3 hours, rinse, and hydroextract.

(7) *Sumaching.*—Prepare a decoction of sumach leaves, 3 to 4 ozs. per 1 lb. of yarn, steep the yarn in this at 104° F., for 6 hours, hydroextract.

(8) *Mordanting and Aluming.*—Pass the yarn through the following mordanting bath, which should have a specific gravity of 7·2° Tw. :—Dissolve 4,000 parts of aluminium sulphate (free from iron) in 16,000 parts of hot water; when cold, add a solution of 400 parts of soda ash in 4,000 parts water. Allow the yarn to lie for 24 hours, and rinse thoroughly.

(9) *Dyeing.*—Dye with about 9 per cent. *Alizarine paste*, 20 *per cent.*, or for reds which have to be perfectly fast to bleaching with *Alizarine Red No.* 1. Work the yarn ¼ hour in the

cold dye-bath, heat within 1½ hours to the boil, and work boiling for ½ hour.

(10) *Clearing.*—To obtain yellowish reds, boil the yarn for 4 hours at a pressure of 15 lbs. per square inch, with 1 lb. soda ash, 1 lb. soap, and 3 to 4 ozs. tin salt, and finally rinse and dry at a low temperature. Blueish reds are obtained by boiling with soap and soda only.

The boiling operation has to be repeated if the red is required to be fast to rubbing and to bleaching.

The method of dyeing *Old Pink* differs from the *Old Red* process in that the strength of the mordanting bath is reduced to 4° Tw., and further in that the pink is cleared twice, first with soda and finally with soda and soap.

The following is a typical method of dyeing *Turkey Red*, taken from *The Dyeing of Textile Fabrics*, by J. J. Hummel.

1*st Operation. Boiling.*—Boil the yarn 6 to 8 hours with a solution of sodium carbonate, 1° Tw., wash well with water, squeeze, dry in a stove at 55° to 60° C.

2*nd Operation. First Green Liquor.*—Emulsify 75 kilos. of olive oil and 8 kilos. of sheep dung with about 1,000 litres of water, and add a sufficient quantity of a concentrated solution of sodium carbonate to make the whole to 2° Tw. Work the hanks separately in this emulsion at 30° to 40° C. till thoroughly saturated, and wring out as evenly as possible. This operation is usually called *tramping.* A machine which is used for this purpose is illustrated in Fig. 68. (C. G. Haubold, jun., G.m.b.H.).

The *Tramping Machine* consists of the framework *a*, which carries besides all the necessary gearing two troughs *b* containing the impregnating liquor, which can be heated by means of the heating channel *c*. The revolving spools *d* are fixed and provided with squeezing rollers *e*, by means of which the excess of liquor can be removed from the hanks. The spools *f* perform the wringing, and the hanks are pressed into the liquor by means of the L-shaped arms *g*. The machine is driven from the shaft *h*. The yarn is placed on the rollers *d* and *f* when the arm *g* is in a horizontal position. The arm *g* falls and presses the yarn into the liquor, and at the same time the rollers revolve for a short time, during which the roller *e* presses the liquor into the yarn.

The arm *g* now again takes the horizontal position, the squeezing roller *e* is lifted, the roller *d* ceases to revolve, the spools *f* are moved to the right in order to gently stretch the hank, and now the spools *f*, by means of the arm *i* and the bevel wheels *k*, twist and then untwist the hank. The hank may now be removed, or its position may be altered and the operation repeated once or twice.

1,500 lbs. of yarn may be impregnated per day on one of these machines. Power required, 1 h.p.

The prepared hanks are allowed to remain piled together overnight (12 to 20 hours). They are then placed into a stove in

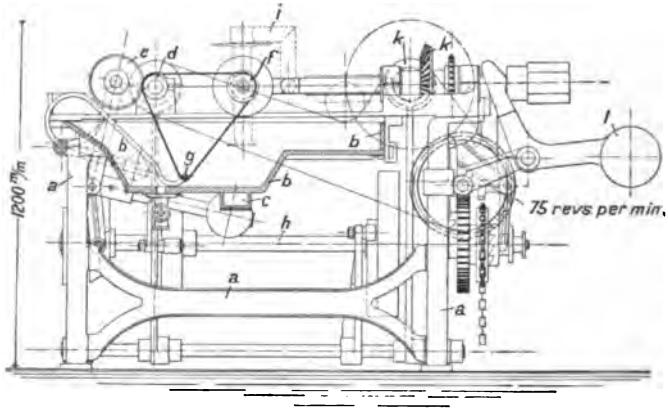

FIG. 68.—Tramping Machine.

which the temperature is gradually raised to 55° to 60° C., at which it is maintained for two hours. Care must be taken to allow the escape of the steam which is given off during the first stages of drying, otherwise the yarn is apt to be tendered.

3rd and 4th Operations. 2nd and 3rd Green Liquors.—The liquors are the same as the one used in the 2nd operation, the yarn is, however, not piled together overnight after impregnation, but is exposed to the open air for 2 to 4 hours previous to stoving.

5th, 6th, 7th, and 8th Operations. 1st, 2nd, 3rd, and 4th White Liquors.—The yarn is "tramped" in a solution of sodium carbonate 2° Tw., wrung out, exposed in the open air, and dried in the stove as in the previous operations.

9th Operation. Steeping.—Steep the yarn during 20 to 24 hours in water heated to 55° C., wash well, and dry in the stove at about 60° C. If the yarn contains much unmodified oil, a solution of sodium carbonate at ½° Tw. may be used; in this case a second steeping for two hours in tepid water is requisite before washing, etc.

10th Operation. Sumaching.—A decoction of sumach is prepared by boiling 60 kilos. of best leaf sumach for about ½ hour with sufficient water to make the cold filtered solution to stand at 1½° Tw. The stoved yarn, whilst still warm, is steeped in large vats in this decoction, as hot as it can be borne by the boys, who usually tramp it with bare feet beneath the surface of the solution. After steeping about 4 hours, the solution is drained off, and the yarn is hydroextracted.

11th Operation. Mordanting or Aluming.—The sumached yarn while still damp is tramped into a solution of basic alum of 8° Tw., at a temperature of 40° to 50° C., which is made by dissolving 4 parts of alum in hot water, and when nearly cold adding gradually a cold solution of 1 part of soda crystals.

Sometimes an addition is made of 150 to 200 c.c. "red liquor" 16° Tw., and 5 to 7 grms. tin crystals per kilo. of alum. Steep the yarn in this solution for 24 hours, wash and hydroextract.

12th Operation. Dyeing.—Dye with 150 to 180 grms. of *Alizarine* (10 per cent.), 30 grms. ground sumach, and about 300 grms. of *bullock's blood* per kilo. of cotton yarn. If the water contains little or no lime, add 1 per cent. of ground chalk, of the weight of Alizarine used. The yarn is introduced into the cold dye liquor, the temperature is gradually raised to the boil in the course of 1 hour, and the boiling is continued from ½ to 1 hour. After dyeing, the yarn is usually washed.

13th Operation. First Clearing.—Boil the yarn for 4 hours at 3 to 4 lbs. pressure, with about 30 grms. of sodium carbonate crystals and 30 grms. of palm-oil soap per kilo. of yarn, and wash. The *clearing boiler* is similar in construction to an ordinary low-pressure kier. It is, however, made of copper.

14th Operation. Second Clearing.—Boil the yarn for 1 to 2 hours at 3 to 4 lbs. pressure, with a solution containing 25 grms. of palm-oil soap and 1½ grms. tin crystals per kilo. of yarn. Wash well and dry in an open-air shed.

The oil employed in the preparation of the "green liquors" is rancid olive oil (*tournante oil*), which is obtained by a second pressing of the olives, after they have somewhat fermented and been steeped in boiling water.

The New Turkey-Red Process.

Brilliant Turkey-red may be obtained by this process. The shades are, however, not as fast to rubbing and to bleaching as those obtained by the *Old Process*.

The following process is recommended by Meister, Lucius and Brüning:—

1. *Boiling.*—Boil with 3 per cent. soda ash or silicate of soda, (76·8° Tw.), for 4 hours at a pressure of 30 lbs. per square inch, rinse thoroughly, hydroextract.

2. *Oiling.*—Pass the moist yarn through a bath containing 12 to 15 gallons of Turkey-red oil (50 per cent.) per 100 gallons of liquor. Dry during 12 hours at 149° F. This operation is repeated. If the yarn is dried after boiling and washing, one impregnation is sufficient.

3. *Mordanting.*—Forty parts aluminium sulphate (free from iron) are dissolved in 160 parts hot water; after cooling, 4½ parts soda ash dissolved in 40 parts water and 1 part chalk, which has been made into a paste with water, are added. When the reaction has ceased, an addition of 3 parts acetic acid (50 per cent.) is made and the mordant diluted to 12° Tw. Heat the mordant to 86° F., pass the dry yarn through it, steep for 3 hours, hydroextract and dry below 104° F.

4. *Fixing.*—The yarn is worked for ½ hour at 122° F. in a bath containing per 1,000 parts of liquor 5 parts of chalk and 5 parts of sodium phosphate, and then thoroughly rinsed.

5. *Dyeing.*—Eight per cent. *Alizarine*, 20 *per cent.*, is generally used. The different shades of Turkey-red can be produced by combining *Alizarine No.* 1 (*blue shade*) and *Alizarine* 5 *F* (*yellow shade*); 10 per cent. acetate of lime, 28·5° Tw. and 1 per cent. tannic acid (both calculated on the amount of dyestuff used) should be added to water which shows a hardness of 7½ degrees.

The yarn is worked in the cold dye-bath for ¼ hour. The temperature of the bath is then raised during 1 hour to 194° F.,

and the yarn is worked at this temperature for ½ hour. After dyeing rinse immediately, hydroextract and dry.

More brilliant shades are obtained by the addition of 2 per cent. Turkey-red oil (50 per cent.) (calculated on the weight of cotton) to the dye-bath.

6. *Steaming.*—Steam 2 hours at a pressure of 22½ lbs. per square inch.

The steaming operation is carried out in a *High-Pressure*

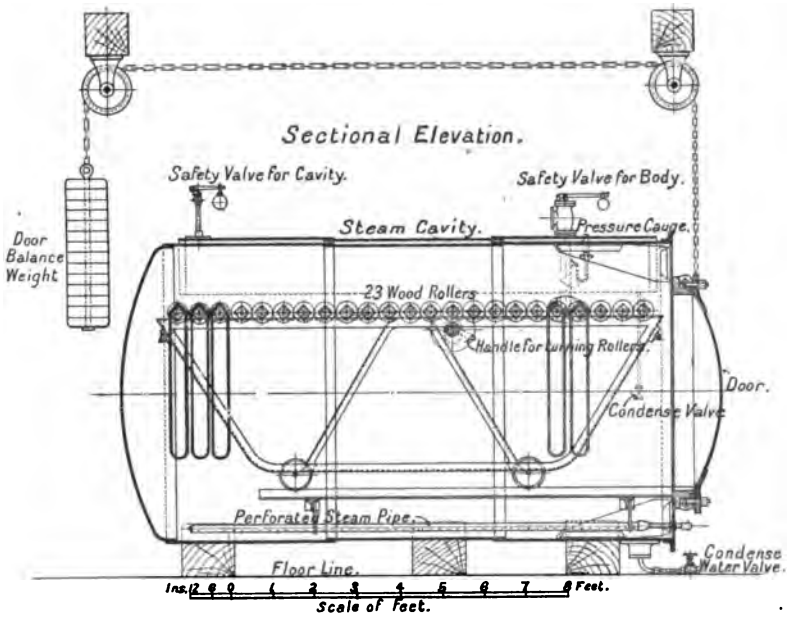

FIG. 69.—High-Pressure Steaming Cottage.

Steaming Cottage, illustrated in Fig. 69 (Messrs. Mather & Platt). The steaming cottage is circular in shape, 7 feet to 8 feet in diameter, according to the width of cloth treated, and varies in length from 6 feet to 12 feet. It is constructed to work at pressures varying from 5 lbs. to 40 lbs., and the upper portion of the cottage is provided with a cavity roof, which is fed with high-pressure steam (about 60 lbs.) in order to prevent condensation of the steam in the cottage and drops of water falling on the cloth. The front of the cottage is provided with a door

which is either hinged or which moves up and down a balance weight. It is fastened by bolts. The cloth is carried by square wooden rollers, which are supported on a waggon running on rails, inside the chamber. Each of these rollers is provided with a spur wheel, which gears into the one adjoining it, and a small stud wheel gears into one of the wheels on the rollers, which is operated by a handle from the outside of the cottage. By means of this arrangement the position of the cloth can be changed as required. The steam enters through a perforated pipe at the bottom of the chamber, and a coil pipe may also be employed if additional heating is required.

7. *Soaping.*—In order to obtain a pure red the yarn is boiled for 1 hour in a closed vessel, with 2 parts of soap per 1,000 parts water, finally washed and dried at a low temperature.

Reds of greater brilliancy and fastness are obtained by boiling the yarn for 2 hours under a pressure of 30 lbs. per square inch, with 2 parts soap, 0·3 parts soda ash, and 0·1 part tin salt, per 1,000 parts water.

New Pink.

The method of dyeing *New Pink* is similar to the method given for *New Red.* Much weaker baths are, however, employed and no tannic acid is added to the dye-bath.

In place of the mordant given under (3), aluminium acetate 7·2° Tw, which is prepared in the following manner, may be employed: 90 parts aluminium sulphate (free from iron) are dissolved in 643·5 parts water (free from iron); 28·5 parts sulphuric acid, 168·5° Tw., and 174 parts acetic acid, 40 per cent., are added; the mixture is well stirred and 89 parts basic aluminium carbonate are slowly added (temperature 95° to 104° F.). The solution is allowed to stand for a short time, decanted, and made up with water to 1,000 parts. A very stable solution of aluminium acetate of 23·2° Tw. is thus obtained.

Other Alizarines, such as *Alizarine Claret R*, etc., may be used in place of *Alizarine Red*, according to the New Red method.

Alizarine Red on Piecegoods.

The following method is recommended for dyeing the *Alizarine Dyestuffs* of The Bayer Company, on cotton piece-

goods :—Slop-pad twice in 1 part Turkey-red oil (neutralised with ammonia) and 4 parts water (free from lime), dry, steam ¼ hour at 7 to 14 lbs. pressure, or put on the racks for 1 to 2 days in a warm damp room at 100° to 120° F. Slop-pad either once or twice with sulpho-acetate of alumina 8° to 9° Tw., allow to remain for 2 hours, dry or put on racks as above. Treat in the jigger for at least ½ hour with 6 lbs. of chalk and 2 lbs. sodium phosphate per 100 gallons of liquor, at 105° F. Wash carefully, dye with the necessary amount of dyestuff with the addition of 1·5 per cent. acetate of lime, 29° Tw., and 0·1 per cent. to 0·2 per cent. tannic acid, calculated on the weight of dyestuff used. Work in the cold bath for ¼ hour, heat to 160° F., within 1 hour, and dye at this temperature for ½ to ¾ hour. Wash in water, which should be as free from lime as possible, oil with a solution of 1 part Turkey-red oil, 50 per cent., and 9 parts water (free from lime). Slop-pad once or twice, dry thoroughly and steam 1½ to 2 hours at 14 to 22 lbs. pressure. After this steaming treat with a solution containing per 100 gallons of water, 2 to 5 lbs. olive oil soap, 0·4 lbs. soda, 0·15 lbs. tin crystals for ½ to 1 hour at 185° F., or boil for 1 hour under a pressure of 7 to 14 lbs. Finally wash and dry in the air.

The previously oiled and steamed material may also be slop-padded in a solution of alum which has been partly neutralised with soda. Allow the pieces to remain rolled up for 1 hour, dry on the racks, wash on the winch, dye with *Alizarine Red* (with the addition of small quantities of stannic oxide paste and acetate of lime), wash, steam for 1 hour, soap slightly, wash and dry.

Simplified Turkey-Red Processes.

Patent 18742/99, Badische Company. The process is chiefly used for dyeing yarn. The red is faster to rubbing and to washing than that produced by the *New Red* process.

Boil out the yarn as usual, rinse, hydroextract, and oil at 105° to 120° F. in a bath prepared by dissolving 10 lbs. of solid caustic soda, 20 lbs. sodium stannate, 12 lbs. sodium aluminate (containing about 45 per cent. Al_2O_3), and 8 lbs. sodium phosphate in 12½ gallons boiling water; 80 lbs. castor oil (first runnings) are then added, and the whole is boiled until the solution becomes clear; then make up with condensed water to

45 gallons. To this is finally added an emulsion of 6¼ lbs. Gallipoli oil and 1 lb. soda ash in 2 gallons warm condensed water.

Two gallons of the cold liquor, at 17° Tw. are then diluted with 4 gallons condensed water. This liquor is used for oiling the yarn. The yarn is oiled a second time in the same liquor and placed in a heap overnight. During this time it should be turned once. In the morning the yarn is hydroextracted and dried at 140° F. until next day. For the next process, that of mordanting, lead-lined vessels should be employed. The cold mordanting bath should stand at 17° Tw., but it is used at 120° to 140° F. The mordant is prepared by dissolving 100 lbs. aluminium sulphate (containing about 18 per cent. Al_2O_3), 9 lbs. ammonium chloride and 13 lbs. magnesium sulphate in 90 gallons of hot condensed water. Allow to settle overnight and syphon off the clear liquor.

In oiling, 1 pint of the stock liquor should be added for every two hanks. When mordanting on a machine, 2¼ pints of mordanting liquor should be added for every 2 lbs. of yarn, whilst when the operation is carried out by hand the addition of 1½ pints will be sufficient.

The yarn is hydroextracted after mordanting and washed until blue litmus paper is no longer reddened by the water.

It is then entered into the cold dye-bath containing 9 lbs. *Alizarine* 20 *per cent.*, and according to the hardness of the water from 1 to 2 gallons calcium acetate 15° Tw., and worked for ¼ hour. The bath is then brought to the boil within 1 hour, and the yarn worked at this temperature for ½ to 1 hour. The yarn is washed and hydroextracted after dyeing.

In order to obtain fast, fiery reds, which rub very little, 2 lbs. of glue and 3½ lbs. sumach extract (or a decoction of 5 lbs. sumach leaves) should be added to the dye-bath. The red is finally cleared by boiling for 2 hours at a pressure of 22 lbs. per square inch, in soft water, to which has been added 1 to 4 lbs. soda ash, 9 lbs. Marseilles soap, ½ lb. tin crystals and 10 gallons of the old oiling liquor. After clearing, the yarn is hydroextracted and dried.

The following three processes have been patented by Meister, Lucius and Brüning:—

Method I.—The yarn is boiled in the usual manner, hydro-

extracted and oiled with 9 kilos. ammonia-Turkey-red oil or 9 kilos. soda-Turkey-red oil, with the addition of 4 litres sodium aluminate 20° Bé. (for 100 lbs. of cotton). The impregnation is performed in a machine, and the yarn is afterwards dried at about 60° C.

The dried yarn is now mordanted with about twenty-five times its weight of mordanting liquor, which contains 18 litres aluminium acetate 7° Bé., and 1·8 litres acetic acid per 1,000 parts of liquor. Turn once, heat the bath within ½ hour to 45° C., and work for ½ hour at this temperature. Wash until neutral, dye, steam, etc., as given under *New Red.*

Method II.—The second and the third methods only differ from the first as regards the composition of the mordanting bath, which contains 3·1 kilos. aluminium sulphate, 9·73 litres calcium acetate 18° Bé., 1·8 litres acetic acid (50 per cent.), per 1,000 litres of water.

Method III.—The mordanting liquor employed in the third method contains per 1,000 litres of water 3·1 litres aluminium sulphate, and 1·6 kilos. sodium metasulphite.

Steiner's Process for Turkey-Red on Cotton Piecegoods.

This process is carried out in the following manner :—[1]

1. *Bleaching.*—The goods are well washed, boiled for 2 to 3 hours with water only, then boiled for 10 to 12 hours in a solution of caustic soda (2 lbs. per 100 lbs. of cotton), and washed; finally, boiled a second time for 10 hours with caustic soda solution (1·5 lbs. per 100 lbs. cotton) and washed. They are then steeped for 2 hours in a solution of sulphuric acid (2° Tw.), washed, padded in a solution of sodium carbonate (4° Tw.), and dried.

2. *Oiling.*—Pad in open width in a clear solution of olive oil, at 110° C., in a special oil-padding machine, and dry in a drying chamber at 70° C. for 2 hours.

3 to 9. *Liquoring.*—The oil absorbed by the fibre is fixed in these operations by saponification. For this purpose the pieces are padded seven times in a solution of sodium carbonate

[1] *A Manual of Dyeing*, Knecht, Rawson and Loewenthal, 2nd edition, p. 586.

(4° Tw.), and hung, after each padding operation, for 2 hours in a stove at 75° to 77° C. In winter time the padding liquors are heated to 35° or 40° C. The number of *liquoring* operations varies with the depth of the ultimate shade which it is desired to produce. The drying rooms must be well ventilated, otherwise the fibre is liable to be weakened.

10. *Steeping.*—The object of this operation is to free the fibres from all adhering oil which has not been fixed thoroughly. The pieces are run through a vat, which is divided into several compartments, fitted with rollers above and below. The first compartments are filled with sodium carbonate (½° Tw.) at 40° C., the last with water only; after being well washed the pieces are dried.

11. *Mordanting.*

12. *Dyeing.*

13 and 14. *Clearing.*

These operations are the same as in the *Old Process.*

Bayer's Patented Process for Dyeing Turkey-Red.

The process, which has been patented quite recently by the Bayer Company, seems to be of considerable interest, because full bright fast reds can be obtained without the tedious and costly processes of mordanting, fixing, etc. The fibres and the fabrics are well penetrated. In order to work the process, it is, however, necessary to obtain a licence from the patentees.

On cotton yarn.

The thoroughly scoured cotton yarn is oiled twice or three times in the usual manner, with a good quality of Turkey-red oil, made slightly alkaline by the addition of ammonia, wrung, dried and stoved as usual.

When fully oxidised, the yarn is steeped in tepid water, squeezed and entered directly into the dye-bath, prepared as follows:—10 per cent *Alizarine Red* 20 *per cent paste* (2*B* or *IP blue shade*), 5 per cent. aluminium sulphate, 2½ per cent. formic acid (90 per cent.), 4 per cent. soda crystals (dissolved separately and mixed with the formic acid before adding it to the bath) ¾ per cent. chalk, 60 per cent. common salt.

Work the yarn cold for ¼ hour or 20 minutes, bring slowly to the boil in 1¼ hours, work at the boil for ½ hour, rinse thoroughly, and finally clear, as usual, during 1 to 2 hours under medium pressure by boiling with soap, with the addition of a small quantity of soda.

On piecegoods.

Scour the cloth thoroughly, pad in the mangle in the usual manner with a 7½ to 10 per cent. solution of a good quality of Turkey-red oil. No soda or potash must be added to the oil. The cloth (100 lbs.) is now ready for entering into the dye-bath, which should be prepared as follows:—

200 gallons water, 60 lbs. common salt, 8 to 10 lbs. *Alizarine Red* 20 *per cent. paste*, 5 lbs. aluminium sulphate., 2½ lbs. formic acid (90 per cent.), 4 lbs. soda crystals, 0·8 lbs. chalk.

The formic acid should be added slowly to the solution of the soda crystals in order to allow the carbon dioxide formed to escape and to prevent frothing over the side of the vessel.

Enter the cloth, run ½ hour cold, raise the temperature to boiling point within 1¼ to 1½ hours, and continue dyeing at the boil for ½ to 1 hour. The pieces are finally soaped at the boil and dried.

Erban-Specht's Method of Dyeing with the Alizarines.

This method differs from the other methods described, in that the cotton is first impregnated with the dyestuff dissolved in ammonia or *Dissolving-ether MLB*, or in mixtures of the two, and in that the mordant is applied afterwards. The method is especially suitable for dyeing light pinks and mode-shades both on yarn and on piecegoods, whilst it is less suited for dyeing reds and heavy shades. The Alizarine dyestuffs are dissolved in water, free from lime, with the addition of ammonia or Dissolving-ether, and neutral Turkey-red oil is added to the dye-bath. The cotton is impregnated, evenly wrung or squeezed and dried at 122° to 140° F. The material is then passed through the mordanting bath, wrung or squeezed, and steamed, or it may be steamed after it has been dried. One to two hours steaming without pressure is sufficient. Piecegoods are impregnated in the padding machine and dried in the hot-flue. The cotton is finally soaped or cleared.

Dyestuffs suitable for this method:—*Alizarine Yellows, Mordant Yellow O, Alizarine Orange, Alizarine Reds, Alizarine Claret, Alizarine Browns, Solid Green O 50 per cent., Ceruleine Paste A, Alizarine Green, Philochromine,* and *Chromoglaucine.*

Recipe for a Medium Pink.

Dyestuff Solution.—One part *Alizarine paste* 20 *per cent.*, 13 parts water, free from lime; 2 parts ammonia, 25 per cent.

1*st Bath.*—83 parts water, free from lime; 12 parts neutral Turkey-red oil (80 per cent.), diluted 1 : 4; 5 parts of the dyestuff solution.

2*nd Bath.*—10,000 parts water, 25 parts acetic acid, 12° Tw., 54 parts aluminium acetate, 19° Tw., 9·5 parts calcium acetate, 28° Tw.

3*rd Bath.*—10,000 parts water, 5 parts soda, 1 part tin salt, 5 parts soap.

The aluminium acetate solution is prepared in the following manner:—Dissolve separately 1,908 parts of alum in 2,000 parts hot water, and 1,590 parts sugar of lead in 1,600 parts hot water. Mix, allow to cool, and add 150 parts soda crystals. Allow to settle for 24 hours, draw off the clear solution and dilute to 19° Tw.

The method is also applicable to the dyeing of mode-shades on different mordants. The method of working is the same as that described for *Pink.*

For light shades the colour solution should consist of 5 parts dyestuffs in paste, stirred up with 45 parts water, and 875 parts water, free from lime, 25 parts ammonia, 25 per cent. (1 : 10), 50 parts Turkey-red oil, 80 per cent. (1 : 4).

For dark shades, Dissolving-ether is used in addition to the above ingredients.

Mordants Used for Dyeing Light Shades.

Aluminium acetate, 15° Tw.	175 parts	—	—
Acetate of chrome, 32·4° Tw.	—	87 parts	—
Acetate of iron, 15° Tw.	—	—	250 parts
Acetic acid, 12° Tw. (1:10)	250 parts	250 parts	250 parts
Acetate of lime, 28·4° Tw.	50 parts	25 parts	25 parts
Water	9,525 parts	9,638 parts	9,475 parts

DYEING OF THE ALIZARINE DYESTUFFS ON CHROMIUM MORDANT.

Blues, brown, greens, olives, etc., may be obtained by dyeing the *Alizarines* on chromium mordants. The shades are remarkable as regards fastness to bleaching and to boiling.

Alizarine Blue paste (ML.) may be dyed on cotton yarn by the following method:—

For 100 *lbs. of Yarn.*—Boil the yarn with 3 lbs. of soda ash, rinse, hydroextract, work for ½ hour, in a cold solution of *Chromium-mordant G.A.I.* (ML.), 18° Tw., steep in the mordant for 12 hours, and hydroextract. Fix ¾ hour at 122° F., with a 2 per cent. solution of soda ash, wash.

The dye-bath is prepared with 15 kilos. dyestuff in paste, dissolved in 6·5 litres ammonia (25 per cent.), 50 litres water, and 150 grms. tannic acid. Turn the yarn ¼ hour in the cold bath, add 15 litres acetic acid, 12° Tw., turn ¼ hour, heat within 1 hour to the boil, and dye ½ hour boiling.

When dyeing with *Alizarine Blue* it is absolutely essential to use water which is free from lime salts.

The dye-bath should be prepared with 50 kilos. *Alizarine Blue paste*, 28·5 litres acetic acid, 12° Tw., 17 litres ammonia (25 per cent). After dyeing rinse and soap at the boil with 5 to 10 lbs. soap, for ½ hour.

Another method consists in treating the boiled, hydroextracted yarn with 15 times its weight of water, to which 5 lbs. of tannic acid, or 25 lbs. of sumach extract (20 per cent.), per 100 gallons, have been added. Work the yarn at 176° F. for ½ hour, steep for 12 hours, hydroextract, work ½ hour in a cold bath of *Chromium mordant G.A.I.*, 18·2° Tw., steep 12 hours and hydroextract. Work ¾ hour in a bath at 140° F., containing 20 lbs. soda per 100 gallons of liquor, and wash. Dye, soap, etc., as in the other method.

Basic dyestuffs may be used together with the Alizarines, or the shades may be topped with these dyestuffs.

Other chromium mordants which may be used are *chromium chloride* and *chromium bisulphite.*

For very heavy dark blue shades the yarn is boiled, oiled and dried in the usual manner, and then worked for ¾ hours in a solution of tannic acid (5 lbs. per 100 gallons of water) at 176° F. It is then steeped in this solution for 12 hours, and hydro-

extracted. The proportion of cotton to liquor should be 1 : 15. The yarn is now worked for 1 hour in a cold solution of chromium chloride, 18·2° Tw., and steeped for 12 hours. Hydroextract and wash immediately in running water. The water used in dyeing should be practically free from lime salts. Dye ¼ hour cold, heat within 1 hour to the boil, and work ¾ hour at the boil, then wash and hydroextract. Steam 2 hours at a pressure of 15 to 23 lbs. and soap boiling, either with or without pressure. For 100 kilos. of yarn the dye-bath is prepared with 15 kilos. *Alizarine Blue F Paste* (ML.), 28·5 litres acetic acid, 12° Tw., 17 litres ammonia (25 per cent.), 150 grms. tannic acid; or with 5 kilos. *Alizarine Blue CB powder*, 5 kilos. acetic acid, 12° Tw., 150 grms. tannic acid.

The method may be varied. Thus the Badische Company recommend for ordinary shades, boiling and rinsing the cotton in the usual manner and steeping in a solution of chromium chloride 32° Tw., for 12 hours, washing in running hard water, and then oiling in a bath prepared with 1 part *Turkey-red oil F* (50 per cent.) and 9 parts water. Then wring and dry at 140° F. In place of chromium chloride, chromium bisulphite, 7° to 15° Tw., is also recommended. Steep the cotton for 12 hours, wring well and treat for 10 or 15 minutes, at 140° F., in a bath containing 5 to 10 lbs. soda ash per 100 gallons water. Rinse thoroughly, hydroextract and oil.

Useful shades may be obtained by using a combination of chromium chloride and aluminium acetate (9° Tw.).

The Bayer Company suggest a process in which oiling is not necessary. Immerse the scoured yarn into a solution of chromium chloride, 15° to 32° Tw., wring, rinse and treat with tannic acid (5 lbs. of tannic acid or 25 lbs. sumach extract, 25 per cent., per 100 gallons of water). Chromium bisulphite 15° to 32° Tw., or chromium chromate 18° Tw., may be used in place of chromium chloride. Dye for ½ hour cold, raise the temperature of the dye-bath slowly, and dye for 1 hour at 140° to 195° F. A small quantity of acetic acid, acetate of ammonia, or tannic acid may be added to the dye-bath. After dyeing rinse, dry, steam, soap for 20 minutes at 120° F., rinse and dry. The colour may be fixed by boiling for 1 to 1½ hours in place of steaming.

The following method is of interest for dyeing cotton piece-goods. Pad the pieces with the following solution:—96 parts acetate of chrome, 32° Tw., 257 parts soda lye, 67° Tw., 4 parts glycerine, 48° Tw., 643 parts water; allow to remain rolled up for 5 to 8 hours, wash and dye.

Or cloth may be slop-padded with the following solution:—6 gallons chromium bisulphite, 32° Tw., 1 gallon tragacanth (65 : 1000), 82 gallons water. After padding dry the goods in the hot-flue, if necessary steam in the Mather-Platt, or pass the goods through a bath at 140° F., containing either 3 lbs. of soda ash or silicate of soda, per 100 gallons. Rinse and dye.

The dyeing is conducted in the usual manner with the addition of about 2 per cent. of acetic acid. The goods are afterwards soaped, rinsed, dried, and, if necessary, after-treated with chlorine.

Dyeing of the Alizarine Dyestuffs on Iron Mordant.

Violet and Bordeaux shades are produced by dyeing some of the Alizarine dyestuffs on iron mordant.

For this purpose the material is boiled and oiled in the manner described for *Old Red*, or for shades which do not require to be very fast, according to that given for *New Red*.

The yarn is then worked in pyrolignite of iron of about 3° Tw. for 1 hour, rinsed and dyed as usual.

Or the material is treated with 3 to 4 lbs. tannic acid per 100 gallons water, then passed through pyrolignite of iron of about 3° Tw., rinsed and dyed.

Or the boiled and oiled cotton is dried, and then mordanted with pyrolignite of iron, 3° to 12° Tw., squeezed, thoroughly dried and exposed to the air for at least 48 hours. The material is then worked for ½ hour at 120° F., in a bath containing 5 lbs. chalk per 100 gallons water, thoroughly rinsed and dyed. Violet shades are produced by dyeing with *Alizarine paste* 20 *per cent V*1 *new*, or *V*2*a bluish* (Ba.).

Suitable shades may also be obtained by dyeing with the Alizarine dyestuffs on a combined aluminium and iron mordant.

For this purpose the yarn is first treated with sumach extract, then with basic aluminium sulphate, and finally with pyrolignite of iron.

Dyeing of Alizarine One-Bath Colours.

Light shades, especially, may be dyed with the Alizarines in one bath. For this purpose the boiled or bleached pieces are padded with the dyestuff solution, dried in the hot-flue, steamed for ½ to 1 hour, and finally washed and soaped.

Solid Green (ML.) may be applied by this method. Wool dyestuffs, which are fixed by means of chromium, may be used in the same bath.

The padding liquor is prepared in the following manner:—10 parts *Alizarine Claret R* (ML.), or 5 parts *Alizarine Claret* and ½ part *Fast Acid Violet R* or *B*, (ML.) or *Fast Acid Blue B* (ML.), 895 parts water, 60 parts ammonia (1 : 10), 20 parts sodium acetate (1 : 10), 25 parts *alkaline chromium mordant.*

Preparation of the alkaline chromium mordant:—200 parts ammonia, 267 parts water, 133 parts glycerine, 400 parts acetate of chrome, 32·4° Tw.

Dyeing of Cops and Cheeses with the Alizarines.

Of the different processes which have been suggested for dyeing reds on cops with Alizarine, none, so far, seems to have been used to any large extent.

F. Kornfeld patented the application of calcium saccharate. The cops are first treated in a bath containing the dyestuff, soda ash, tannic acid and calcium saccharate, and they are then steamed.

According to another process the cops are dyed with a solution of Alizarine in sodium carbonate, afterwards treated with acetic acid and steamed.

PART XV

COLOURS PRODUCED ON THE FIBRE BY OXIDATION

THE chief representative of this group of colouring matters is the *Aniline Black*. It is produced by the oxidation of aniline in acid solution. The process is not a simple one. During oxidation of the aniline, a green compound, *Emeraldine*, is first produced, and this is ultimately converted into Aniline black. By the action of oxidising agents, such as bichromate of potash, bleaching powder, etc., the black is converted into an *ungreenable* Aniline black, whilst reducing agents, *e.g.*, sulphurous acid, are capable of turning the shade of Aniline black more greenish. This action, called the *greening* of Aniline black, often presents very serious difficulties. It is supposed to be due to the formation of emeraldine.

In order to make Aniline black *ungreenable*, an after-treatment with bichromate, with the addition of a small quantity of mineral acid and aniline salt, or aniline oil, is recommended.

The greatest care has to be taken in order to avoid tendering of the fibres during the processes of dyeing and ageing.

Cotton dyed with Aniline black is weighted considerably, up to 10 per cent.

The following three methods of dyeing Aniline black are employed commercially :—

1. *One-bath black* (*dyed black*).
2. *Aged black.*
3. *Steam black.*

DYEING OF ONE-BATH BLACK.

This method of dyeing Aniline black consists in treating the material in a bath containing a mixture of aniline, bichrome and mineral acid. The method is simple, and the black produced *rubs* badly, but the strength of the fibre is not affected.

The cotton may be softened and the fastness to rubbing somewhat improved by oiling or soaping after dyeing. One-bath black is frequently dyed on a bottom dyed with a substantive or a sulphur black.

100 *lbs. of Cotton Yarn.*

Method 1.—The yarn is well boiled and then worked for about 15 minutes in a bath containing 1 lb. of sulphuric acid, 168° Tw.

For dyeing, the following bath is prepared:—8 lbs. of aniline salt and 9 lbs. of sulphuric acid, 168° Tw.;—or 6 lbs. of aniline oil, 5 lbs. of hydrochloric acid, 36° Tw., and 4 lbs. of sulphuric acid, 168° Tw.;—with the addition of 9 lbs. of bichrome, 2 lbs. of copper sulphate and 2 lbs. of nitrate of iron, 100° Tw.

The yarn is worked in the cold bath for 1 hour. The bath is then slowly heated to the boil. The yarn is now taken out, exposed to the air for some time, thoroughly rinsed, soaped and dried.

Method 2.—The dye-bath is prepared with:—10 per cent. aniline salt (Meister, Lucius, and Brüning), 14 per cent. hydrochloric acid, 36° Tw., 3·5 per cent. sulphuric acid, 168° Tw., 13 per cent. sodium bichromate. Enter the material work ½ hour cold, heat to the boil, during 30 minutes, and work ¼ hour. Rinse thoroughly, soap at the boil. 1 per cent. of logwood extract may be added to the soap bath.

Method 3.—Dissolve 10 lbs. potassium or sodium bichromate, 2 lbs. sulphuric acid, 168° Tw., and 3 lbs. hydrochloric acid, 32° Tw., in 75 gallons water, stir well and add 5 lbs. aniline salt O (Badische Anilin und Soda Fabrik) previously dissolved; or in place of the aniline salt, 3 lbs. 9 ozs. aniline oil O, dissolved in 4 lbs. 10 ozs. hydrochloric acid, 32° Tw. may be used. Work the yarn in the cold liquor for 1½ hours, heat to 120° F.; after 1 hour raise the temperature to 175° F. Rinse well and soap for about 1 hour at 130° to 175° F., with 5½ lbs. soap and 1½ ozs. olive oil. Wring without rinsing, and dry.

Method 4.—Noelting and Lehne, *Anilinschwarz*, p. 54, give the following particulars for dyeing Boboeuf's one-bath black, which is largely dyed in France:—

Solution (a).—6 lbs. aniline are dissolved in 9 lbs. hydrochloric acid, 12 lbs. sulphuric acid, 20 gallons water.

Solution (b).—12 lbs. sodium bichromate are dissolved in 20 gallons water.

Equal parts of (a) and (b) are mixed in an earthenware basin. 2 lbs. of cotton are worked quickly in this bath. A bronzy black is developed within 1 to 2 minutes. When all the yarn has been impregnated in this manner, it is well wrung and steamed for 20 minutes at 3½ pounds pressure. The yarn is finally rinsed and soaped. The jet-black obtained in this manner is practically ungreenable.

Method 5.—K. Oehler's method of dyeing a one-bath black on cotton yarn. 200 gallons of dye-liquor should be prepared for 100 lbs. of yarn, with 13 lbs. aniline salt, 20 lbs. hydrochloric acid, 34·2° Tw., 14 lbs. bichrome, previously dissolved in hot water. Work the yarn cold for one hour, raise the temperature of the dye-bath slowly to 158° to 176° F., turn for ½ hour. Rinse, soap (1 lb. soft soap per 10 gallons of water) ½ hour at 140° F. If necessary, the yarn may be softened with 2 per cent. Turkey-red oil, hydroextracted and dried.

Method 6.—*Cold Process.*—For 100 lbs. of cotton yarn, prepare the following solutions, each separately:—*A*. 8 lbs. aniline oil, 16 lbs. hydrochloric acid, 32° Tw., 4 gallons water; *B*. 20 lbs. sulphuric acid, 168° Tw., 4 gallons water. Allow to cool; *C*. 14 lbs. potassium bichromate, 4 gallons boiling water; *D*. 10 lbs. ferrous sulphate, 4 gallons water.

Charge the dye-beck with 300 gallons of cold soft water, and add one-half of the solutions *A*, *B*, *C*, *D* in the order given. Enter the boiled cotton, which should have been well wrung or hydroextracted, and work cold for one hour. Lift the cotton out, add the remainder of the solutions, re-enter and work for 1½ hours. Rinse the yarn two or three times, soap (240 gallons water, 12 lbs. soap, 6 lbs. soda ash) at the boil, wring and dry without rinsing.

Method 7.—The Société Anonyme des Matières Colorantes et Produits Chimiques de Saint Denis give the following recipe for a one-bath Aniline black:—For 100 kilos. of cotton mix 5 litres of aniline oil (pure) with 10 kilos. of hydrochloric acid, 22° Bé.; allow to crystallise. Dissolve the crystals in warm water and add the solution to the cold dye-bath of about 1,000 litres. To this add 6 kilos. of potassium or sodium bichromate dissolved in water,

600 c.c. of a solution of ferric chloride, 40° Bé., and 600 c.c. sulphuric acid. Stir the bath, enter the cotton, work quickly until the colour develops uniformly and work for 1 hour cold. Heat gradually to the boil, add 2 kilos. potassium bichromate, work well and allow the yarn to remain in the bath for about ½ hour at 80° C., rinse well, soap boiling, and finally rinse.

Aged Black.

Aged black is produced by padding the material with a solution of aniline salt and a metallic salt (copper, iron, etc.), which acts as an oxygen carrier. The impregnation is followed by the process of *ageing*. The goods are finally chromed and washed.

Aged black is chiefly dyed on piecegoods. When dyed on cotton hanks it is sold under the name of *Diamond Black*.

Dyeing of Aged Black on Loose Cotton.

Meister, Lucius and Brüning recommend the following method for dyeing Aniline black on *loose cotton* and *cotton yarn*.

The following solutions are mixed together :—120 parts aniline salt, 40 parts sodium chlorate, 5 parts ammonium chloride, 3 parts copper sulphate, then add 120 parts aluminium acetate, 21·6° Tw., and dilute the whole to a density of 12° Tw.

Impregnate the thoroughly wetted-out cotton with this solution, hydroextract (the liquor coming from the hydroextractor is kept), place on hurdles, and dry at 95° to 104° F.

The cotton must be well shaken before it is placed into the stove as well as during ageing. When the cotton is perfectly dry, steam is allowed to pass into the ager for the purpose of completing the ageing.

Ageing should be completed in from 18 to 24 hours.

Develop in a bath, at 104° to 122° F., containing 6 per cent. sodium bichromate, 0·5 per cent. aniline salt, 2 per cent. sulphuric acid, 168° Tw., rinse thoroughly and treat with an emulsion of oil.

Dyeing of Aged Black on Cotton Yarn.

Method 1.—The cotton yarn is boiled with soda in the usual manner, rinsed in water and well wrung or hydroextracted.

The solutions, as given below for piecegoods, recommended

by K. Oehler, are mixed together in a vat of about 100 gallons capacity. 50 lbs. of yarn should be impregnated at a time in 100 gallons of the liquor, at 12° Tw. Turn the yarn for ½ hour, lay up, wring lightly and hydroextract. The extracted liquor should be poured back into the vessel. The yarn ought to retain about its own weight of liquor.

The yarn is now well shaken and placed on sticks which have been previously wiped over with the aniline liquor and dried.

An ageing machine, such as described on p. 349, may be conveniently used.

The ageing chamber should be large enough to hold a whole day's production; it should be provided with a ventilator in the ceiling and with a fresh air inlet underneath the floor. The air which enters is conducted into a channel in which it has to pass over steam radiators. The saturated air is ultimately removed by means of the ventilator. The height of the chamber should be at least 15 feet, because there ought to be sufficient free space above the yarn in which the vapours are allowed to collect before they are removed by the ventilator.

The room required for ageing may be calculated on the basis of 280 to 350 cubic feet per 100 lbs. of yarn. Uniformity of temperature in every part of the ager is very essential for the production of a satisfactory black. For this reason the amount of air removed by the ventilator must be carefully adjusted, in order to prevent any undue draught being created. The impregnated yarn should be evenly, but not too closely, distributed in the ager. When the ventilator is set in motion the temperature should be raised to 94·5° F.

Wooden laths, about 1¼ inches square, with rounded-off corners, and about 10 feet in length, may be used in place of ordinary sticks. About 4½ lbs. of yarn should be placed on each lath. During the process of drying the laths are turned by hand in such a manner that within 8 to 10 minutes the position of the yarn on the laths is reversed.

Two hours after turning the yarn for the first time, it is given half a turn. This operation is repeated in intervals of 2 hours. The first operation, *i.e.*, the drying of the yarn, should be completed in from 4 to 6 hours. For the ageing proper, which follows the drying, moist heat is required. For this purpose steam is allowed to pass into the ager until the dry-bulb thermometer

registers 94·5° F., the wet-bulb, 86° F. During the process of ageing, which occupies from 6 to 8 hours, the laths should be turned from time to time.

When the yarn has obtained a blackish-green colour it is removed from the ager and entered into a bath at 166° to 176° F., containing, for 100 lbs. of yarn:—200 gallons of water, 6 lbs. bichrome, 4¾ gills sulphuric acid. Turn quickly for 10 to 15 minutes, thoroughly rinse and soap at 176° F., with 3 lbs. olive-oil soap and 1 lb. soda ash per 100 gallons of water, rinse and dry.

The impregnating bath has been given for 50 lbs. of yarn. In case 200 lbs. of yarn have to be impregnated, the three following 50-lb. lots should be impregnated in rapid succession.

When starting, a mark indicating the height of liquor in the vessel should be made. The amount of liquor removed by the yarn can thus be readily ascertained. Some of the water contained in the yarn will also have passed into the impregnating bath which will, therefore, have become weaker. Before entering a fresh lot of yarn, solutions of aniline, bluestone, etc., in the proportions given above are added to the old bath, in order to bring the liquor up to the original volume and strength.

If the bath is found to be too strong, water should be added to bring its strength to 12° Tw.

The intensity of the black depends upon the amount of liquor absorbed, thus high counts require more of the impregnating solution than low counts.

Method 2.—Steep the dry yarn in a cold bath containing per 100 gallons:—108 to 110 lbs. *aniline salt O* (Badische Anilin und Soda Fabrik), 36 to 40 lbs. potassium or sodium chlorate, 13 to 15 lbs. copper sulphate, 25 to 30 lbs. aluminium acetate, 15° Tw., and 5 lbs. wheat starch.

The liquor should have a density of 7½° Tw., at which it must be kept during dyeing, by adding a sufficient quantity of the above stock solution.

After steeping, the yarn has to be well and evenly wrung and aged for about 12 hours in a warm damp atmosphere at a temperature of about 85° F. The ageing is completed when the yarn has assumed a very dark green colour. It should now be worked for ½ hour, at 160° F. in a solution containing 2½ lbs. potassium bichromate per 100 gallons. Finally rinse well, soap, brighten with soda, and treat with soap and oil.

Dyeing of Aged Black on Piecegoods.

Meister, Lucius and Brüning give the following instructions for dyeing piecegoods:—120 lbs. aniline salt, 10 lbs. aniline oil, 35 lbs. sodium chlorate, ½ lb. copper sulphate, per 100 gallons liquor.

The goods are impregnated with this solution, aged and chromed.

The following is another method of dyeing an "ungreenable" aged black. Two solutions are prepared:—*A*.—55 gallons of water, 45 lbs. aniline salt, 13½ lbs. toluidine, 7 lbs. acetic acid, 18½ lbs. sodium chlorate.

B. 18½ lbs. nitrate of iron, 76·6° Tw., 6 gallons water, 27 lbs. of a solution of copper sulphate (2 : 10).

Mix 8 gallons of *A* with 1 gallon of *B*, and pad with this mixture. Age and develop as usual.

The following process is recommended by Chemische Fabrik Griesheim-Elektron, Werk Oehler:—The pieces are padded with the following solutions, which are prepared separately, mixed when cold, and made up with water to 100 gallons. The padding liquor should stand at 12° Tw. 120 lbs. aniline salt are dissolved in 26 gallons 3½ pints water; 5½ lbs. copper sulphate are dissolved in 10 gallons water; 37 lbs. 9½ ozs. sodium chlorate are dissolved in 7 gallons 3½ pints water; 4 lbs. ammonium chloride are dissolved in 2 gallons 3½ pints water; to this are added 4 gallons 6½ pints aluminium acetate, 15° Tw.

The cloth should be impregnated in such a manner that it retains about its own weight of padding liquor.

After impregnation, the cloth should be dried as rapidly as possible at a low temperature, after which it is aged for 1 to 2 hours at a temperature of 92° to 96° F.

The ageing is followed by chroming and soaping.

Vanadium Black.

It has been found that very minute quantities of salts of vanadium act as very powerful oxygen carriers. For this purpose a solution of *vanadium chloride*, prepared from *ammonium vanadate*, is employed.

Vanadium Black is chiefly used in calico printing.

A. G. Green (Eng. Patent No. 16,189, 1907)[1] suggests the addition of a *paradiamine* or of a *para-amidophenol* to the padding liquor. No oxidising agents are added.

It is claimed for this black that the fibres are not tendered, and that it is cheaper than ordinary aged black.

The material is padded, or printed with the following solution, aged or steamed as usual, rinsed and dried, or the ageing may be followed by an after-treatment with bichrome, etc.:—

Padding Liquor:—A solution of 48 parts cupric chloride, 140 parts ammonium chloride, and 14 parts sodium metabisulphite in 500 parts of cold water is added to a solution of 50 parts aniline, 2 parts paraphenylenediamine, 15 parts hydrochloric acid (30 per cent.) and 15 parts formic acid (90 per cent.) in 1,500 parts cold water.

Fig. 70, illustrates a complete plant for the production of *Aged Aniline Black* on cotton piecegoods, as supplied by Messrs. Sir James Farmer & Sons. The cloth passes over the entering rails into the padding machine in which it is impregnated with the aniline solution. It is then squeezed and dried on a vertical drying machine with six cylinders. From here it enters the ageing chamber, and from this it passes to the chroming, washing and drying range.

The ageing chamber contains 130 wood lagged winces over which the cloth is threaded. Steam pipes are arranged below, on the top, and between the winces, and a steam chest is provided in order to prevent the formation of drops at the end at which the cloth enters the chamber. Partitions, to ensure the systematic evacuation of the vapours formed, are arranged between the three top rows of winces. The vapours are removed by means of an electrically driven exhaust fan. The cloth ultimately leaves the chamber near the top. It is advisable to allow a certain length of the cloth to run down, before passing it into the chroming range.

This consists of six tanks which are provided with the necessary guide rollers, steam pipes, overflows, outlet valves, draw rollers and squeezers. The top rollers are pentagonal in shape in order to rapidly vibrate the cloth. A heavy three bowl squeezing mangle is placed at the end of the range. Before entering the

[1] *Journ. Soc. Dyers and Colourists*, XXIV., p. 231, 1908.

UNIV. OF
CALIFORNIA

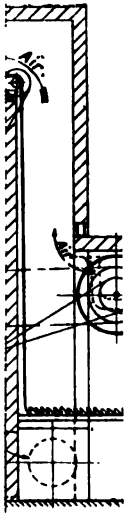

aust Fan.
Overall.

of Aged An

UNIV. OF
CALIFORNIA

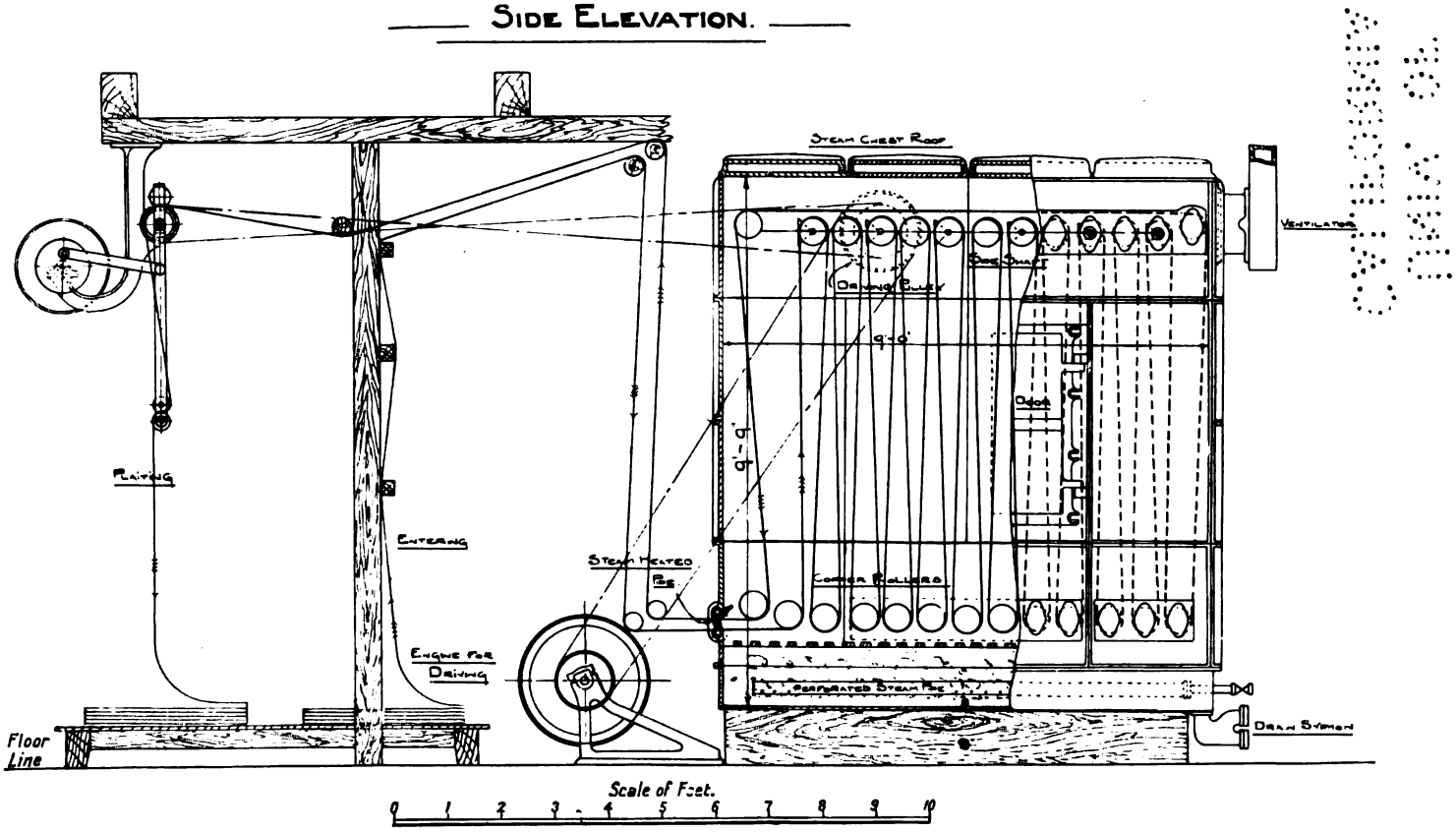

FIG. 71.—Mather-Platt Ager for Steam Black.

drying range, the cloth passes through a compensator to take up any slack. The drying machine consists of 23 cylinders, arranged in three stacks, and is similar in construction to the drying machine shown in Fig. 44, p. 128.

After leaving the drying machine, the cloth is plaited down. The whole range is driven by one electric motor, the power being transmitted to the various machines by means of belts and ropes. The cloth passes through the machine at a speed of about 45 yards per minute. Power required to drive the range:—50 h.p.

Steam Black.

Steam Black is produced by padding the cotton pieces with a solution containing aniline salt, sodium chlorate and yellow prussiate of potash. This is followed by steaming in a rapid ager of the Mather-Platt type for about 2 minutes and by chroming for about 1 minute in a solution of potassium bichromate (5 lbs. per 100 gallons) at 122° F.

The following padding solution is recommended by K. Oehler: 40 lbs. aniline salt, dissolved in 6 gallons of water, 26 lbs. yellow prussiate, dissolved in 15 gallons of water, and 15 lbs. of sodium chlorate, dissolved in 8 gallons of water.

For very thin, light goods, it is advisable to make the padding liquor slightly alkaline by the addition of a small quantity of ammonia.

This method of dyeing Aniline black is chiefly practised in print works.

The Mather-Platt Ager for Steam Black is illustrated in Fig. 71. It consists of a chamber made of cast iron plates which are bolted together, and it is made in lengths varying from 9 feet to 18 feet, according to the production required, by 9 feet high.

The pieces enter and leave through the same opening in the end of the chamber, which holds from 70 to 150 yards of cloth.

The rollers over which the cloth passes are made of seamless drawn copper tubes, 5 inches diameter, and in order to prevent any undue strain on the cloth, every alternate one is driven. The roof of the chamber is formed of steam heated cast iron chests by means of which condensation and the falling of drops of water on the cloth is avoided.

Perforated steam pipes are provided both near the top and the

bottom of the chamber for the purpose of supplying the requisite amount of moisture to the ageing chamber. A closed coil of steam pipes, for heating purposes, is placed near the bottom of the chamber. Doors are provided in the side of the chamber for the convenience of threading up, and a wet and dry bulb thermometer is arranged in a convenient position.

A ventilator is provided at the back end of the chamber for carrying away the vapours formed. The cloth passes through the ager at a speed of from 50 to 80 yards per minute. Power required to drive the machine :—3 to 4 h.p.

Prud'homme Black.

Padding Solution :—42 lbs. aniline salt (ML.), 20 lbs. tragacanth-thickening (6 : 100), 2½ lbs. aniline oil (ML.), 11 gallons of water ; 27 lbs. potassium ferrocyanide, 14 gallons water ; 15 lbs. sodium chlorate, 16 gallons water.

Diphenyl Black.

In 1902, Meister, Lucius and Brüning introduced the *Diphenyl Black*. As compared with Aniline black, Diphenyl Black is ungreenable, and it does not weaken the fibre. This is of special importance in the dyeing of goods which have to be "Schreiner-calendered." The Black is produced by the oxidation of either *Diphenyl Black Base* or *Diphenyl Black Oil DO*. The latter is a solution of the base in aniline oil. Goods which have been padded with Diphenyl Black Base I, may be taken over ordinary drying cylinders, but better shades are obtained by a passage through the Mather-Platt. After ageing the goods are rinsed and soaped. Chroming is not only unnecessary, but produces inferior (brownish) shades. Boiling of the goods before padding is not necessary.

Preparation of the Padding Liquor for Yarn :—The following two solutions are prepared separately :—

1. 350 grms. *Diphenyl Black Base* are dissolved (warm) in 1,500 c.c. acetic acid 9° Tw., and 400 c.c. lactic acid (50 per cent.). The mixture is cooled and stirred into 1 kilo. gum tragacanth-thickening (6 : 100) and 2 litres water, and made up with water to 5 kilos.

2. 170 c.c. aluminium chloride 53° Tw., and 100 c.c. cerium chloride 91° Tw., are mixed with 3,850 c.c. water and 250 grms. sodium chlorate dissolved in 750 c.c. water, and the whole made up with water to 5 kilos.

3 litres of (1) are mixed with 3 litres of (2) immediately before using; 2 lbs. of yarn are impregnated at a time, thoroughly wrung and dried at 60° C. The drying is best carried out on a centrifugal drying machine. (See page 350.) After drying, steam for 5 to 10 minutes without pressure, wash and soap.

Padding Liquor for Piecegoods :—

1. 6 lbs. gum tragacanth-thickening (1 : 10) and 7½ lbs. water; 4 lbs. *Diphenyl Black Base* are dissolved (warm) in 5 lbs. lactic acid (50 per cent.) and 13 lbs. acetic acid, 40 per cent. Stir the tragacanth into it and add 14½ lbs. water, to make up to 50 lbs.

2. 2½ lbs. aluminium chloride 53° Tw., 2½ lbs. chromium chloride 53° Tw., and 6·4 ozs. cupric chloride 77° Tw., and 34½ lbs. water; then add 3 lbs. sodium chlorate, dissolved in 6 lbs. boiling water and 1 lb. oil of turpentine, and dilute with water to 100 lbs.

Padding Liquor prepared with Diphenyl Black Oil :—

1. 6 lbs. gum tragacanth-thickening (1 : 10), 7½ lbs. water, 6 lbs. *Diphenyl Black Oil DO* are dissolved cold in 15 lbs. acetic acid (40 per cent.), stirred into the tragacanth and made up with 15½ lbs. water to 50 lbs.

2. 30½ lbs. water, 3·8 lbs. hydrochloric acid 30·5° Tw., 1·6 lbs. aluminium chloride 53° Tw., 2½ chromium chloride 53° Tw., 6·4 ozs. cupric chloride 77° Tw., 1 lb. oil of turpentine, made up to 40 lbs.

3. 3 lbs. sodium chlorate, 7 lbs. water. Before using stir (3) and (2) into (1).

The previously boiled pieces are padded 2 to 4 times, passed through the ager for about ½ hour, steamed in the Mather-Platt for 2 minutes, soaped at 140° F., rinsed and dried. A more greenish shade of black may be obtained by adding a small quantity of fustic extract to the soap bath.

Paramine Brown.

Under the name of *Paramine*, the Badische Anilin und Soda Fabrik have brought *paraphenylenediamine* into the market, by

means of which browns may be produced on the fibre by oxidation. The method resembles that used for dyeing *Steam Black.*

A more yellowish brown is, *Fuscamine* (B.A.S.F.), produced by using *para-aminophenol* in place of *Paramine.*

A similar colour is the *Bistramine Brown* of the Bayer Company.

Colours Produced on the Fibre by Condensation.

Nitroso Blue, Resorcine Blue MR (Meister, Lucius and Brüning).

The chief representative of this group of colouring matters, which are produced on the fibre by condensation, is the *Nitroso Blue* obtained from *resorcine* and *p-nitrosodimethylaniline* (*Nitroso Base M* 50 *per cent.*).

Piecegoods are padded in the following solution and gently dried :—

24 grms. Nitroso Base M paste 50 per cent., 50 c.c. lukewarm water, 8 c.c. hydrochloric acid 36° Tw., are thoroughly mixed, then add the solution of 16 grms. resorcine in 16 c.c. water. To this add 20 c.c. of a solution of tannic acid (1 : 1), and 60 c.c. of a solution of oxalic acid (1 : 10). The solution is then stirred into 100 grms. gum tragacanth-thickening (6 : 100), made up with water to 800 c.c. and before using, a solution of 8 grms. sodium phosphate in 200 c.c. water is slowly stirred into it.

Nitroso Blue is chiefly used in calico printing.

PART XVI

DYEING MACHINERY

Dyeing of Loose Cotton (Raw Cotton).

The machines employed in dyeing loose cotton may be divided into two classes :—

(*a*) Machines in which, comparatively speaking, a large quantity of dye-liquor is employed and in which the cotton is suspended and moved about in the liquor.

(*b*) Machines in which the cotton is either lightly or more or less tightly packed and in which the dye-liquor is forced or sucked through the cotton by means of pumps, propellers, etc.

The simplest arrangement used, consists of vessels made of copper or tinned copper or wood. The former may be heated either by a direct fire, the oldest system, or open or closed steam coils may be placed inside the vessel, or finally, the vessel may be made double jacketed and heated by steam ; the latter arrangement is the most satisfactory one. In this type of apparatus the cotton is worked during dyeing by means of wooden poles. Care has to be to taken in order to prevent matting or felting of the fibres.

In a machine belonging to type (*a*), suggested by Jagenburg, the cotton is moved by means of slowly revolving paddle wheels.

A machine largely used in America for the dyeing of loose cotton is the *Klauder-Weldon Raw Cotton Dyeing Machine* (The Klauder-Weldon Dyeing Machine Company, Huddersfield), which is illustrated in Fig. 72 (cross-section). It consists of a wooden trough 1 containing the dye-liquor, provided with a top cover which prevents the steam from escaping during the dyeing operation, with openings on each side through which the machine may be charged and discharged. These openings are covered during dyeing with canvas curtains. The cover is not shown in the illustration. The tank is usually placed from 12 to

24 inches below the floor level. The material is placed into the hollow metal cylinder 2, which is divided into four compartments by the partitions 3. Thus four batches are dyed at the same time. Each compartment contains an outwardly projecting piece 4, which assists in keeping the material during the dyeing operation in a loosened condition. In order to obtain perfect circulation and penetration of the dye-liquor through the material, the copper sheets, with which the compartments, the cylinder heads and the partitions are lined, are perforated. The doors 5, which are securely fastened during the dyeing operation, when opened, allow the filling and emptying of the material. The cylinder is rotated slowly in the direction of the arrow, thus carrying the material down into and through the dye-bath. The cylinder is driven by means of the gear racks 6 and pinion gears 7, attached to shaft 8. The compartments of the cylinder are so constructed that the material is turned over at every revolution of the cylinder. The capacity of the machine varies from 100 to 2,240 lbs. of cotton. A machine capable of dyeing from 1,000 to 1,500 lbs. of raw cotton requires the following floor space: 11 feet 7 inches wide, 10 feet 6 inches front to back; 7 feet 10 inches height above the floor line; 1½ to 2 h.p. are required to drive the machine, and the dye-vessel contains about 1,300 gallons of liquor.

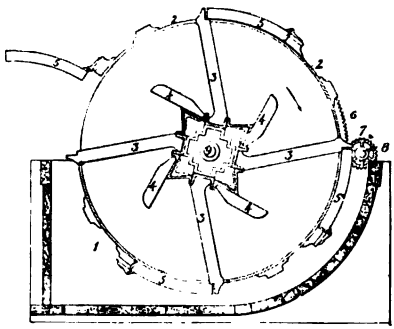

FIG. 72.—Klauder-Weldon Raw Cotton Dyeing Machine.

Machines in which the Cotton is Lightly Packed.

The *Rhodes Dyeing Machine*, which is largely employed in the dyeing of loose cotton is illustrated in Fig. 73 (cross-section). It consists of the wooden dye-beck A, two partitions B, which run the full length of the machine, and the lattice bottom C, on which the loose cotton is placed. The dye-liquor is heated to boiling-point by means of the perforated steam pipes D and E.

When the liquor commences to boil, the steam is turned off at

E; the steam escaping through the perforations in the pipes D forces the dye-liquor upwards between the walls of the vessel A and the partitions B against the baffle-plates F, from which it is distributed over the material, penetrating it in a downward direction. Thus a very rapid and thorough circulation of the liquor through the material is obtained.

The *Dréze Machine*, which in its action resembles an open boiling kier with puffer pipe, and the *Schmidt Machine* in which the dye-liquor is circulated by means of a propeller or turbine placed underneath the perforated bottom of the dye-vessel, whilst largely used for dyeing of loose wool, are little used for raw cotton dyeing on account of the material becoming packed too tightly and thus preventing free circulation of the dye-liquor.

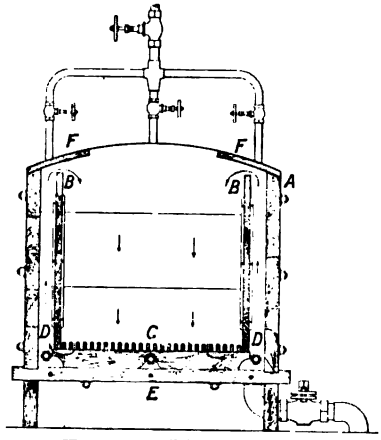

FIG. 73.—Rhodes Dyeing Machine.

Machines in which the Material is more or less Tightly Packed.

The first machine of this type was invented by E. Gessler and built by Obermaier & Company. It is illustrated in Fig. 74. The drawing has been supplied by Messrs. Mather & Platt. The material being tightly packed in this type of machine, felting or matting of the fibres cannot take place. In order to obtain satisfactory results it is, however, essential that the packing be carried out with care and in such a manner that the dye-liquor evenly penetrates every part of the material. The dye-liquor must be absolutely free from undissolved particles, because the cotton, acting as a filter, would retain such particles and become unevenly dyed.

The apparatus consists of the wood or iron cistern containing the dye-liquor, below which is placed the centrifugal pump for the circulation of the liquor. Inside the cistern, and over the delivery of the pump, is fixed a conical seating, upon which rests a perforated cylinder. This cylinder consists of an inner and outer perforated casing, between which the loose cotton is tightly and evenly packed

and held in position by means of a lid forced down by a screw. The centrifugal pump forces the dye-liquor through the inner perforated casing of the cylinder, then through the material, and

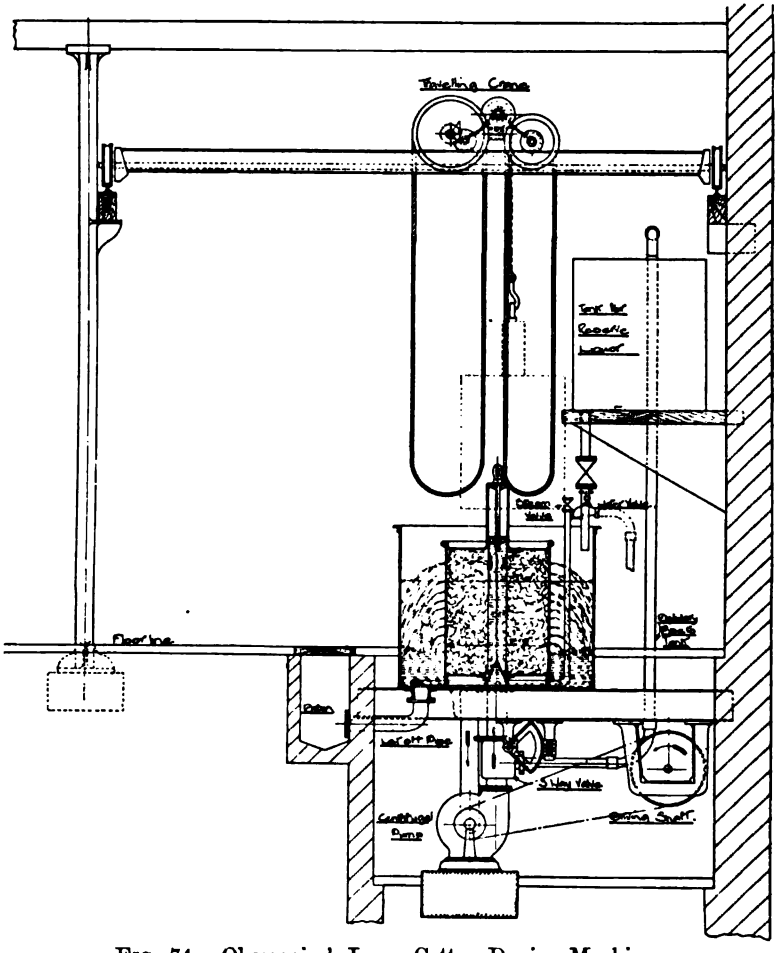

FIG. 74.—Obermaier's Loose Cotton Dyeing Machine.

finally through the perforations in the outer casing into the cistern and from here back to the pump. A small travelling crane is provided for lifting the cylinder in and out of the cistern. For a single apparatus a runner and blocks will suffice.

The pumps and the fittings are usually made of brass, the

cylinder of copper. For dyeing sulphur dyestuffs the whole apparatus is made of iron.

If it is desired to store the dye-liquor after dyeing, an overhead reserve tank is provided, which is connected with the bottom of the dyeing cistern, and by means of a special three-way valve, the centrifugal pump can be employed both for pumping the liquor to the overhead reserve tank, and for circulating it through the material.

The apparatus is built in various sizes, but the following is a convenient size: Perforated cylinder 2 feet 8 inches diameter by 3 feet 6 inches deep. A 5-inch centrifugal pump which requires about 4 h.p. to drive is employed. The cylinder is capable of holding about 200 lbs. of loose cotton.

C. G. Haubold has constructed an apparatus for dyeing loose materials which resembles an ordinary hydroextractor. The material is packed into the cage and the dye-liquor is introduced through a perforated pipe in the centre of the cage. After dyeing, the material can be immediately hydroextracted.

A machine of a holding capacity of 1,800 lbs. of raw cotton, in which the dye-liquor is forced through the material by means of a powerful pump, in which the outer perforated casing is made in sections, has lately been brought into the market by Jean Schmitt of Belfort (France).

Dyeing of Cotton Yarn.

On account of its comparative simplicity, the dyeing of cotton yarn in the hank is practised to a far greater extent than dyeing in the shape of cops, cheeses, etc.

Rectangular vats, provided with false perforated bottoms of such depth that the hank, when placed on the stick and suspended in the vat, will hang freely without touching the bottom, are generally used. The vats are usually made of pitch pine, held together by iron bolts. The perforated steam-pipe enters at one end of the vat behind a wooden partition. In some vats a closed coil may be provided in addition to the perforated pipe, in order to avoid dilution of the dye-liquor by the condensed water. The hanks are placed on sticks by means of which they are suspended in the dye-liquor.

Thus five or ten bundles of yarn are placed into the vat at a

time until just sufficient space is left at the end for turning the hanks. The hanks are now turned either by hand or by passing a rod (*broaching stick*) through the hanks below the stick, by means of which the hanks are lifted and given about a quarter turn. In this manner all the hanks in the vat are turned one stick-full after another. It is the usual practice, after all the hanks have been turned, to lift out one or two sticks from one end and to transfer the hanks to the other end of the vat. A certain number of "turns" are given until the dyeing operation is completed.

The hanks are then rinsed, if necessary, wrung or hydro-extracted and dried.

Although a number of machines have been suggested for dyeing yarn in the hank, comparatively speaking, few are used to any large extent. As compared with dyeing in the ordinary vat, the initial expense of the machines is much greater, and, unless large quantities of yarn have to be dyed to the same shade, dyeing in machines is not economical, because the changing from one colour to another entails a considerable amount of time and labour which is lost in cleaning the machine.

Machines in which the hanks are placed on revolving copper or porcelain rollers, similar in construction to the hank washing machines, are but little used.

In *Corron's Hank Dyeing Machine* special sticks are used which have a frame attached to them, by means of which the hanks are lifted out of the liquor and partly turned. The mechanical arrangement is rather complicated.

Spencer employs triangular rods, by means of which the hanks are turned, and which are carried by a framework which enables the hanks to be entirely lifted out of the vat. Metal rods are placed into the hanks for the purpose of weighting them.

E. Thoen suggests the use of specially designed clips, by means of which the spread-out hanks are fastened together so as to form a long band. This may then be treated in a *jigger* or in any other type of machine employed for dyeing cotton piecegoods.

The *Klauder-Weldon Hank Dyeing Machine*, which is very extensively used, is illustrated in Fig. 75. The machine consists of the wooden trough containing the dye-liquor, a metal reel, specially constructed for carrying the yarn and a wooden covering to prevent the hanks, when coming out of the liquor, from

coming into contact with the air. In the illustration, 1 is the trough containing the dye-liquor, 2 a false back, behind which the steam pipe 3 enters. The reel 4 consists of three metal spiders which consist of skeleton frames, to which are fitted two series of attachments 5 and 6, for holding the ends of the square and round sticks respectively, on which the hanks 7 are placed. The dye-sticks resting in the outer holders of the spider are square, whilst those resting in the inner holders are round. The square sticks are left square at one end, but they are made round at the other.

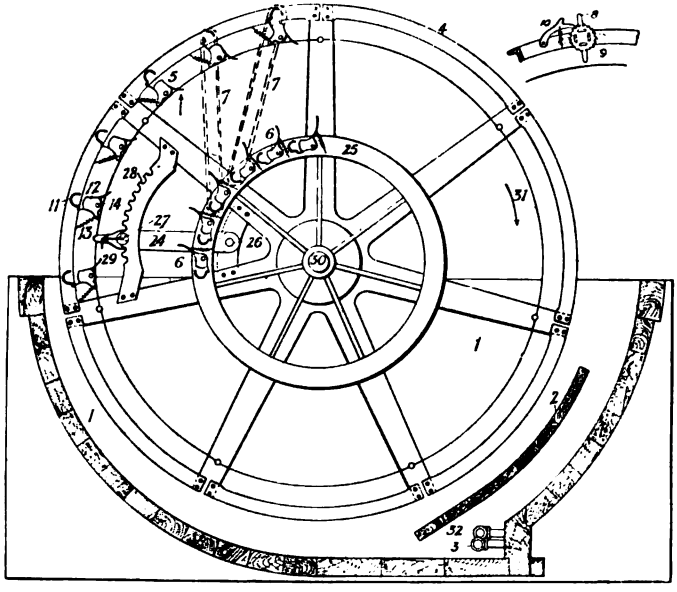

FIG. 75.—Klauder-Weldon Hank Dyeing Machine.

The square end of each stick of the two series fits into an outer holder, as shown in the detailed drawing on the right. The round end of each stick fits into holder 5 on the central spider. By means of this arrangement the stick is turned on its axis, and, therefore, the hank is also turned. This is accomplished by having the holder made rotary. Projections 8, one of which always projects outwardly, are provided on all four sides. As the reel revolves, one of the projections comes into contact with a tripping arrangement, and thus the holder and the stick are turned one quarter revolution. The stick is held in position, after

it has been turned, by a ratchet 9 and pawl 10. The round end of the stick is held by an outer holder 5 on the central spider. It consists of a semi-circular piece 11, in which the end of the stick rests, and a latch 12, with a spring 13, which holds the stick in its place. By pressing on the outer end of the latch, in the direction of the arrow, the stick may be placed into the holder, or taken out of it. The round sticks are made round at both ends. One end fits into the holder 6, the other into a corresponding hole on the outside spider. These sticks are not driven, but rotated by the friction of the yarn. The machine is charged in the following manner: Each hank is placed on one square and one round stick, the former being placed into the machine first, the latter last. This is reversed when the hanks are removed. After the hanks have been placed into the machine, they are tightened by means of a lever 24, which is connected to the movable ring 25, which carries the holders 6. After the lever has been pulled as tight as required, it is secured in position by letting a pin 27 into a groove 28, directly underneath it by means of a small rod 29. The reel is attached to shaft 30, to the end of which is fastened a worm-gear which causes the reel to rotate slowly in the direction of the arrow 31. The dye-liquor is fed into the vat through the perforated copper pipe 32. Two sets of sticks are used; thus, whilst one set is in the machine the other may be re-charged with yarn. Openings in the wooden cover are provided on each side, which are covered with canvas curtains when the dyeing operation is in progress. Thus the steam is not allowed to escape, and the yarn, practically speaking, is steamed between leaving and re-entering the dye-bath. For dyeing with the Sulphur Dyestuffs the machine is entirely built of iron and the cover is made watertight. The hanks are thus completely immersed in the dye-liquor during dyeing.

The machine is built in different sizes; 200 to 400 lbs. of yarn may be dyed with Sulphur or Vat Dyestuffs, and 400 to 500 lbs. with other dyestuffs, in one operation. Floor space required, 13 feet wide, 9 feet 3 inches from front to back, 7 feet 8 inches height above floor. Power required, 2 h.p. Amount of dye-liquor, 3,000 gallons when the material is entirely submerged, 1,700 gallons when not submerged.

Cotton yarn may also be dyed in machines in which it is

tightly packed, and the dye-liquor forced through the material by means of powerful centrifugal pumps. Such machines have been described under "Cop Dyeing" and "Loose Cotton Dyeing."

Drying of Cotton Yarn.

Drying by exposure to the air gives, in many instances, the best results, because the water is not completely removed, and the yarn is, therefore, after drying, in the proper "condition." The process is, however, slow, and requires a considerable amount of space. Cotton yarn may be dried in ordinary stoves in which the yarn is suspended on poles. Steam radiators, over which the air passes when entering the stove, are usually placed below a lattice floor, and an exhaust fan may be provided in the roof of the chamber.

A drying stove which may be used both for drying and for ageing aniline black has been described under "Aniline Black," p. 333.

A *Hank Drying Machine*, by means of which the yarn may be rapidly dried at a low temperature, is shown in Figs. 76 and 77 (Messrs. C. G. Haubold jun., G.m.b.H.). It consists of a vertical axle *a*, which carries, both at the top and bottom, twelve radial arms *b*, between which are fixed twelve wooden frames *c*. Each of these frames carries four or six round wooden poles *d*, which carry the yarn and which can be readily taken out of the frames.

The upper poles are fixed, whilst the positions of the lower ones can be adjusted by means of screws, in accordance with the length of the hanks.

According to the number of poles used, two or three lots of yarn may be placed on the machine at one time. The frame is driven by pulleys *g*, the shaft *f*, and the bevel wheels *e*. Steam radiators are placed below the machine. About 1,000 lbs. of cotton yarn can be dried on one of these machines per day. Power required, $1\frac{1}{2}$ h.p.

Machines for a smaller production are also built in which the axle carrying the arms is placed horizontally. In this type, the frames are dispensed with. One of the poles carrying the hanks is supported near the axis, the other near the periphery

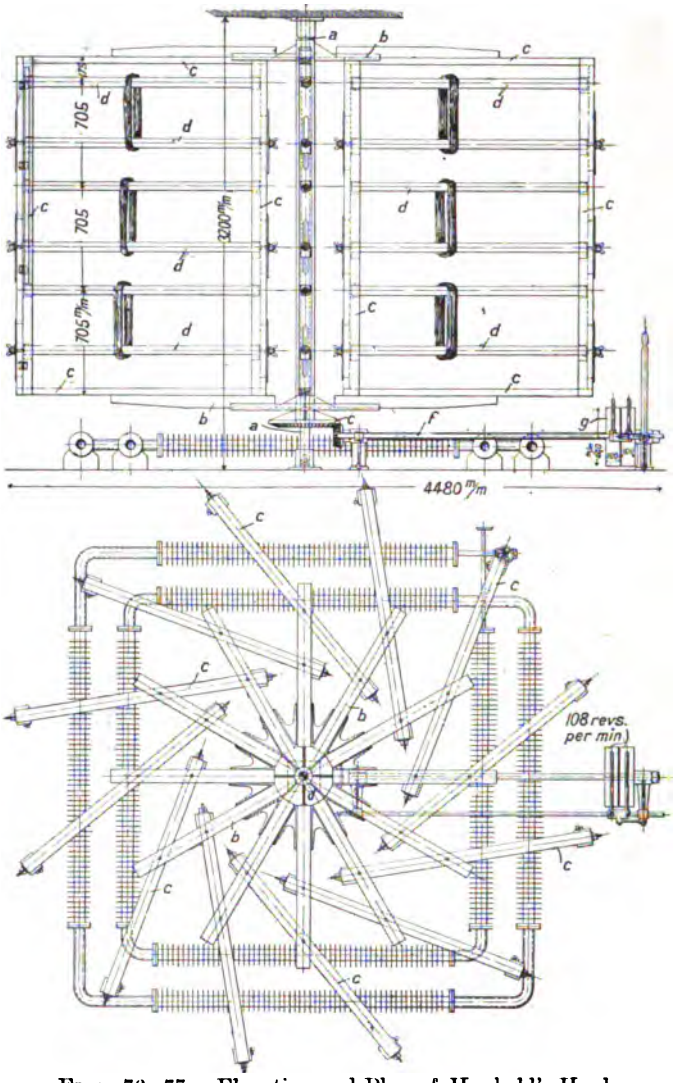

FIGS. 76, 77.—Elevation and Plan of Haubold's Hank Drying Machine.

of the machine. In machines of this type, which are also used for the ageing of Aniline black, the poles near the axis revolve slowly; thus the hanks are continuously turned.

The *Continuous Hank Drying Machine* of A. Montforts is

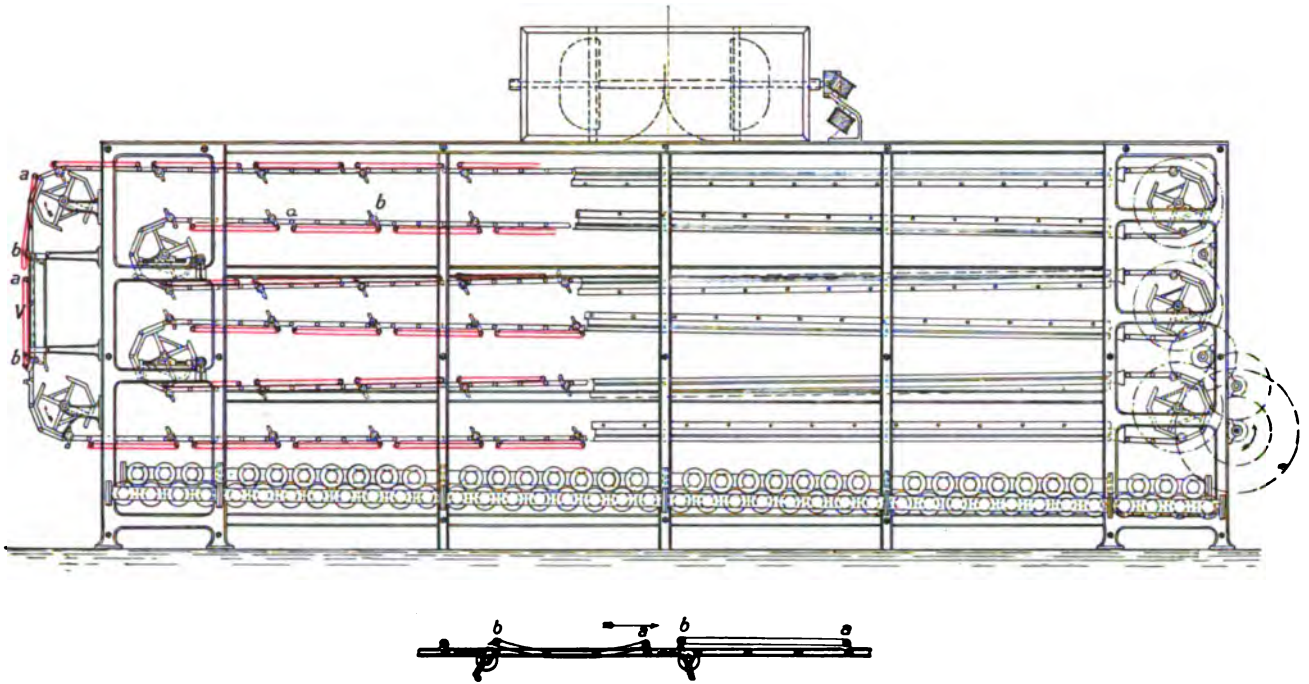

FIG. 78.—Montforts' Continuous Hank Drying Machine.

UNIV. OF
CALIFORNIA

illustrated in Fig. 78. It is particularly suited for the drying of sized yarn. During its passage through the machine, the yarn is repeatedly shaken in order to keep it soft and to prevent the threads from sticking together.

The hank is placed on two sticks which are placed at V on the two travelling chains in such a manner that one of the sticks is carried by the fixed bearing *a*, the other by the movable bearing *b*. In order to facilitate the charging of the machine and the removal of the hanks, when dry, the distance between the two bearings *a* and *b* is automatically reduced, when the chains arrive at V.

The hanks are now conducted into the stove, in which they travel six times forward and backward. During this time the sticks are continuously turned, and by means of the arrangement, shown in the detailed sketch below the machine, the hanks are shaken from time to time. The length of the machine is 9·250 m., the width 1·3 m., and the height 3·8 m. 1,000 to 1,200 lbs. of heavily sized yarn, or a correspondingly larger quantity of dyed or bleached yarn may be dried in one machine in 10 hours.

In Fig. 79 the *PKC pat. Dryer* of Paul Klug is illustrated, in which yarn, cops or loose cotton may be dried. It is claimed for this drying stove that the dried material is obtained in a softer condition, and that it requires no "conditioning" after drying. The wet material comes into contact with the hottest air, whilst in the advanced stage of the drying moderately heated air is used. The wet material is placed into boxes or on trays *a*, which are pushed into the preliminary drying chamber, near the bottom of the chamber. The boxes move upwards whenever a new box is placed into the chamber. At the same time, the box at the top moves automatically into the second drying chamber *c*, in which the boxes move downwards. The boxes containing the dried material are finally removed at the bottom of chamber *c*. The hot air circulates through the chambers in the direction of the arrows on the dotted line. It passes first over the steam pipes in the heating chamber *d*, then in an upward direction through chamber *c*, from whence it is conducted over a larger number of steam-heated pipes in heating chamber *e*. The hot air now passes into chamber *b*, where it meets the freshly introduced wet material, and through

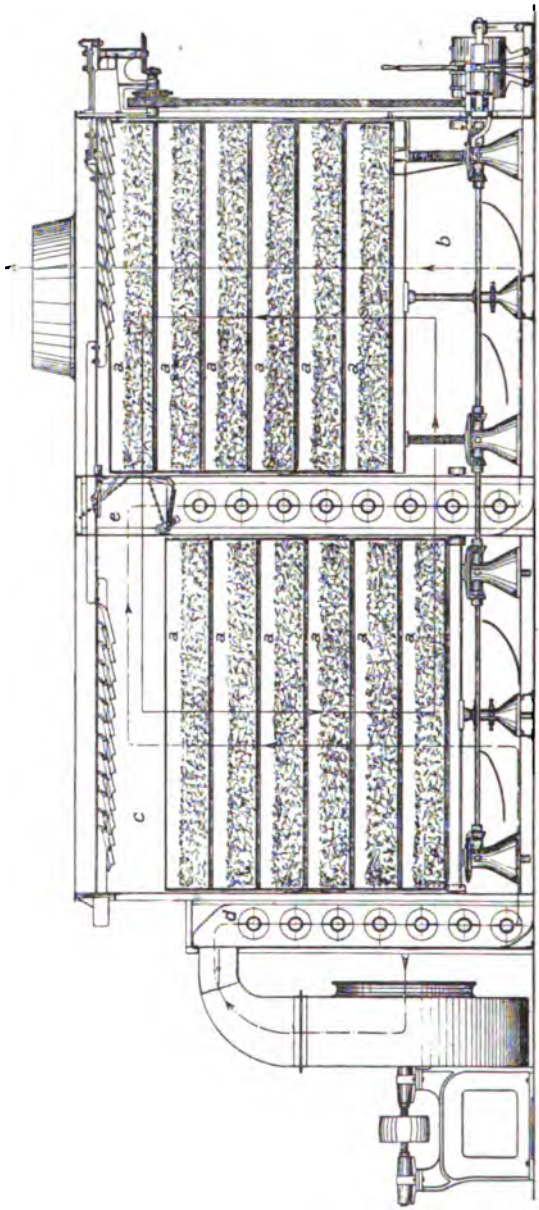

FIG. 79.—Klug's PKC Dryer.

which it passes in an upward direction. It is finally discharged at the top of this chamber.

A machine working with sixteen boxes is capable of drying the following quantities of material in 10 hours: Cotton waste, 990 to 1,320 lbs.; cheeses, 1,155 to 1,210 lbs.; cops, 1,320 to 1,430 lbs.; hanks, 1,045 to 1,100 lbs. A machine of this capacity has a length of 15 feet 6 inches, width 6 feet 9 inches, and height 11 feet. The fan which supplies the air makes 1,500 revolutions per minute. Machines are constructed which are capable of drying 3 to 4 tons of material per day.

Cop Dyeing.

The dyeing of cotton yarn in the cop, as compared with dyeing in the hank, offers certain advantages. Time and labour required in reeling the cops into hanks and in winding the hanks into cops, previous to weaving, are saved, and a certain loss of material inherent to these operations is avoided. On the other hand, a considerable initial outlay is necessary in connection with the machinery required, and whilst, practically speaking, every dyestuff can be employed in dyeing cotton yarn in the hank, a considerable number of dyestuffs, such as the Alizarines, Aniline black, Para-red, Catechu brown, etc., cannot be conveniently employed for dyeing cops.

Satisfactory results in cop dyeing depend to a large extent upon the type of apparatus employed, the manner in which it is used, the careful handling of the material, *i.e.*, the packing or the skewering of the cops, and last, but not least, upon the dyestuffs employed. It is essential that the dyestuffs should be perfectly soluble, and that they should exhaust slowly. In cop dyeing we are, therefore, practically restricted to the use of the substantive cotton dyestuffs (some of which may be diazotised and developed or coupled), the sulphur dyestuffs, the vat colours and the basic dyestuffs. The latter class of dyestuffs frequently presents difficulties as regards level dyeing.

The uncertainty of regularly obtaining satisfactory results should also be mentioned when comparing cop dyeing with dyeing in the hank, because failure may be frequently due to only one of the many possible causes.

Although the experience in cop dyeing has in many cases

been dearly bought, we have now improved machinery at our disposal which enables a number of firms to carry on cop dyeing with very satisfactory results. The manufacturer who does the dyeing for his own looms, will usually find cop dyeing to be a remunerative business.

The large number of cop dyeing machines which have been invented may be divided into two classes: (a) machines constructed on the *Packing*, or *Solid Skewer System*, and (b) machines constructed on the *Perforated Skewer System*. The former have developed out of the machines of the "Obermaier" type for dyeing loose cotton.

Packing System.

In the machines belonging to this system the cops are tightly packed into boxes, varying in shape, and the dye-liquor is forced through the material by means of powerful pumps, or by centrifugal force. The *Obermaier Machine* and the *Middleton Machine*, which differ in the arrangement of the boxes, will be fully described. As regards the dye-vessel and the arrangement of the centrifugal pump, the machines resemble the one described for dyeing loose cotton, Fig. 74, p. 344. The dye-vessel is, however, usually square in shape, and in place of forcing the dye-liquor from the pump into a perforated cylinder, the delivery pipe of the pump is connected with the square boxes (usually six or eight in number) containing the cops through which the liquor is forced from below in a vertical direction.

In the Middleton machine the eight boxes are placed upright, in two rows in a frame, in such a manner that a central chamber is formed, into which the dye-liquor is forced and from which it passes horizontally through the cops. This arrangement allows the turning of the boxes, from time to time, in order to force the liquor through the cops alternately in opposite directions. The boxes and the entire machine are usually made of phosphor bronze or of iron or "nickelin," when used for dyeing with the sulphur dyestuffs.

Previous to packing the cops into the boxes, a skewer made of thick lead wire, hard rubber or wood, is introduced into each cop.

The greatest care should be exercised so as to pack the cops into the boxes as uniformly as possible in order to ensure even penetration of the dye-liquor. The manner of packing one

of the boxes with large *twist-cops* (ten cops per lb.) is shown in Fig. 80 (transverse section) and in Fig. 81 (longitudinal section). The bottom of the box consists of a perforated plate upon which rests a fairly coarse wire-gauze. A piece of calico, which should be large enough to allow it to be wrapped entirely round the cops, is then placed into the box. The packing is then commenced by first placing a small quantity of cotton waste or a cotton hank at the end of the box, near I, upon which are then placed seven cops side by side in such a manner that the cop "bottoms" touch the end of the box. The remaining space at the side is filled out by a piece of wood, the shape of half a cop. Seven cops forming layer 2 are then placed into position with their "noses" towards the noses of layer 1. The space on the opposite side is again filled by a piece of wood. Layer 3 is now packed in such a manner that the bottoms of the cops are placed against the end of the box. Here, as in layer 1, a small quantity of waste or a hank is placed underneath the cop bottoms. The packing of the next layer is now commenced at II, 4, followed by 5 and 6. The next layer is commenced at III, 7, layer IV at 10, V at 13, and the last layer, VI, at 16. Smaller cops, such as ordinary pincops, are packed in the same manner. Four or five layers will be required lengthways, whilst eight or nine layers may be necessary to fill the box completely. Before packing the last layer into the box, it may be necessary to press the cops down. The cloth is finally lapped round the cops and the boxes are transferred to a steam-chest, in which they are steamed for 15 minutes to half an hour at a pressure of 2 to 3 lbs. The cops are now tightly pressed into the box, the wire gauze and the perforated plate are placed on to the top and secured by means of wedges.

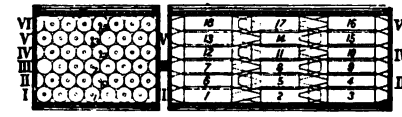

FIGS. 80, 81.—Transverse and longitudinal section of Cop Box packed with cops.

A machine with eight boxes will hold about 100 lbs. of cops. *Cross-wound spools* are usually placed flat into the boxes, either six or eight in one layer and two or three layers high. It is advisable to use more waste in packing spools than in packing cops.

The boxes containing the cops are now transferred to the machine, in which they are securely screwed down. The centrifugal pump should be sufficiently powerful to produce a pressure of about 5 to 8 lbs. in the machine. It usually makes about 700 revolutions per minute. It is difficult to obtain satisfactory results if the pressure is either above 8 lbs. or below 5 lbs. The cops may be washed in the machine after dyeing, and the boxes are then placed into a special hydroextractor in order to remove excess of water.

Cop dyeing machines, in which the cops are packed into boxes which are placed into a hydroextractor, have been patented by J. C. Hamer and by H. Judenburg. The dye-liquor is introduced into the centre of the cage and passed through the cops by means of centrifugal force.

A special cop dyeing machine has been patented by B. Cohnen. It is recommended for dyeing with dyestuffs which oxidise readily if brought into contact with the air. The cops are packed into boxes which are placed into the cage of a hydroextractor. The dye-liquor is forced through the cops by means of a powerful centrifugal pump. The liquor supply pipes are removed and the openings hermetically closed, as soon as the dyeing has been completed. The cage is then revolved rapidly, and the cops are hydroextracted without coming into contact with the air. The lid of the machine is now removed and hydroextracting continued in order to force air through the material and to oxidise the dyestuff.

Of the other machines which belong to the *packing system*, those of G. de Keukelaere and of H. Schirp should be mentioned. The dye-vessel and the arrangement of the centrifugal pump are similar to that of the Obermaier apparatus. The cops or cheeses are packed into two large boxes, which are placed together so as to form a chamber in the centre. The sides of this chamber are perforated and the material is held in position in the two boxes by means of perforated plates. The boxes, when filled with the material, are placed into the dye-vessel and a connection is made between the inner chamber and the delivery pipe of the centrifugal pump. The dye-liquor is now forced into the central chamber, and from here through the material. 3 to 4 cwts. of cops may be dyed in one operation.

In order to dispense with the cotton waste or the hanks which

are necessary in packing the cops into the boxes, De Keukelaere patented the use of *sand* for filling the interstices between the cops. Some difficulty seems, however, to have been found in removing the particles of sand from the cops after dyeing.

F. Mommer & Co. also constructed a cop dyeing apparatus in which the cops are tightly packed into a large box.

Perforated Skewer System.

In this type of machine each cop is placed on a perforated skewer into which the dye-liquor is forced and from which it passes outwards through the cop, or suction is applied, and thus the dye-liquor passes from the outside through the cop into the skewer. The end of each skewer is inserted in a perforated cylinder or plate. In nearly all the modern machines pressure and suction can be applied alternately.

Each cop being separately dyed, the danger of producing uneven shades is not as great as is the case in the packing system, in which the upper layer of cops acts as a filter. Samples can be much more readily taken, less force is required in order to penetrate the material, and excess of dye-liquor can also be more readily removed by suction when dyeing on perforated skewers.

Perforated skewers are, however, expensive and fragile, and, therefore, frequently broken, and the perforations often become stopped up by loose fibres or by colour particles which causes the circulation of the dye-liquor to become uneven, with the result that white or light-coloured places appear in the cops. The greatest care has also to be exercised in order to skewer the cops properly.

The machines of Crippin and Young, and of Graemiger, the latter improved by Graemiger, Whitehead, Mason and Leigh, were among the first machines working on the perforated skewer principle. In the *Graemiger Machine* the skewers carrying the cops are inserted into two circular discs (*cop-carriers*) which fit against the walls of four chambers. The two lower chambers are immersed in the dye-liquor and connected to a powerful suction pump. The discs, when filled with cops, perform a quarter revolution, and whilst opposite the two lower chambers, the dye-liquor is sucked through the material. When the discs have performed the third quarter revolution, the cops are brought opposite one of the upper chambers, to which suction is applied

by means of which excess of dye-liquor is removed. After the fourth quarter revolution, the cops are taken away and skewers with fresh cops are inserted into the discs.

In a later type of machine invented by Graemiger the cops are placed on rectangular plates which slide into the dye-vessel, with the walls of which they form two chambers, to which suction is applied. In lifting the plates out of the machine, after dyeing has been completed, they slowly pass over two other chambers connected to a suction pump by means of which the excess of dye-liquor is removed.

In *Beaumont's Machine* the cop-carrier consists of a circular perforated plate which is placed horizontally into the dye-vessel. The suction pipe of a Beaumont pump is connected to the cavity formed below the cop-plate. The dye-liquor after having been sucked through the cops is delivered back into the vessel. The machine is provided with a cover which can be tightly screwed down in order to allow of the dyeing operation being carried on under pressure.

The *Wolff Cop Dyeing Machine* differs from the *Beaumont Machine* in that three cop plates are placed one above the other. One side of the machine can be taken out in order to allow of the cop plates, which are conveyed on small waggons, being readily placed into and removed from the machine.

The cop dyeing machines constructed by the Zittauer Maschinen Fabrik (Schubert's) and by U. Pornitz & Co., allow the liquor to be alternately sucked and pressed through the cops, a decided advantage over the systems in which the liquor travels in one direction only.

A *Pornitz Machine* is illustrated in Fig. 82. The cop-carriers consist of perforated cylinders into which the skewers are inserted. Special cylinders are provided for twist-cops, pin-cops and for cross-wound spools respectively.

In the illustration one of the cylinders is used as a cop-carrier, whilst in the other cotton hanks, warps or loose cotton may be packed in the same manner as described under "Loose Cotton Dyeing" in the Obermaier apparatus. The apparatus is usually made of copper, except for dyeing the sulphur dyestuffs, when it is entirely constructed of iron. Two cop-cylinders are generally placed into one dye-vessel and a powerful centrifugal pump is provided for the circulation of the liquor. The direction of the

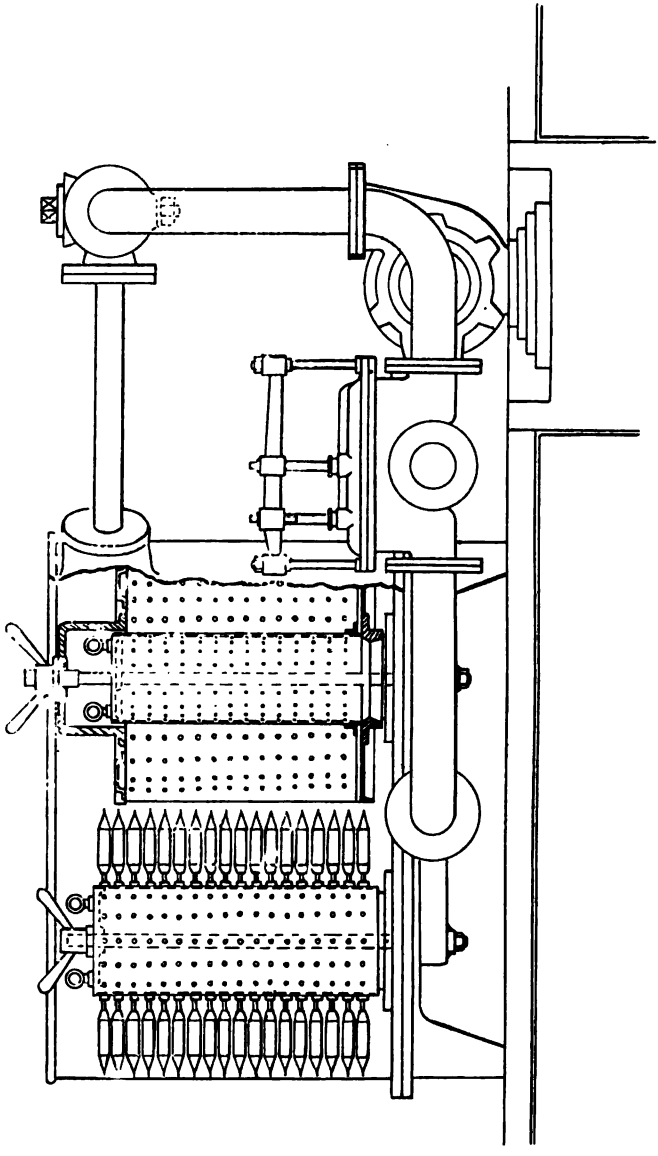

FIG. 82.—Pornitz's Cop Dyeing Machine.

dye-liquor through the cops can be readily reversed from time to time by means of two three-way valves. Provision is also made for removing the dye-liquor from the vessel after the dyeing

operation has been completed, and the apparatus is also usually connected either to a compressed air or a vacuum cylinder by means of which the excess of dye-liquor can be readily removed from the cops. It is, therefore, not necessary to hydroextract the material after dyeing and before placing it into the drying stove. The power required to work one machine is about 3½ h.p., and the dimensions are: length 2,700 mm., width 1,800 mm., height 1,400 mm. The following quantities of material can be dyed in a machine provided with two cop-cylinders in one operation: 1,520 pin-cops or 972 twist-cops, or 160 cheeses. The apparatus may also be connected with the steam supply in order to allow the cops to be steamed previous to dyeing.

A new *Patent Cop Dyeing Machine* of Messrs. Mather & Platt is illustrated in Fig. 83. It is specially suited for dyeing with the sulphur dyestuffs, because neither the material nor the liquor comes into contact with the atmosphere during dyeing. The cop-carrier consists of a perforated cast-iron drum or cylinder, which, when filled with cops, is enclosed by a perforated casing made of special metal and lowered on to a seating in the dyeing cistern, the lid of which is afterwards closed and bolted down. The air is exhausted by means of an ejector both from the dyeing cistern and the receiver, and the liquor is then allowed to flow from the liquor tank until both vessels are rather more than half full. The steam is then turned on, and the liquor is forced out of the receiver into the inside of the cop-cylinder and through the perforated skewers and the cops into the dyeing cistern until the drum and the material are completely immersed in the liquor. By means of an automatic arrangement operated by a float in the receiver, the steam connections to the receiver and the dyeing cistern are now reversed, and thus the liquor is forced out of the cistern through the cops back into the receiver. The flow of liquor is reversed about 40 times per minute. After the dyeing operation is completed, the liquor, if required for future use, is allowed to run into the liquor tank. Excess of moisture is extracted from the cops by causing a pressure of steam to accumulate in the dyeing cistern, then suddenly opening a large valve which is in connection with the inside of the cylinder, thus relieving the pressure and allowing the steam to blow the liquor out of the cops into the liquor tank. The cop-cylinder is then removed from the dyeing cistern by means of a lifting arrangement, placed

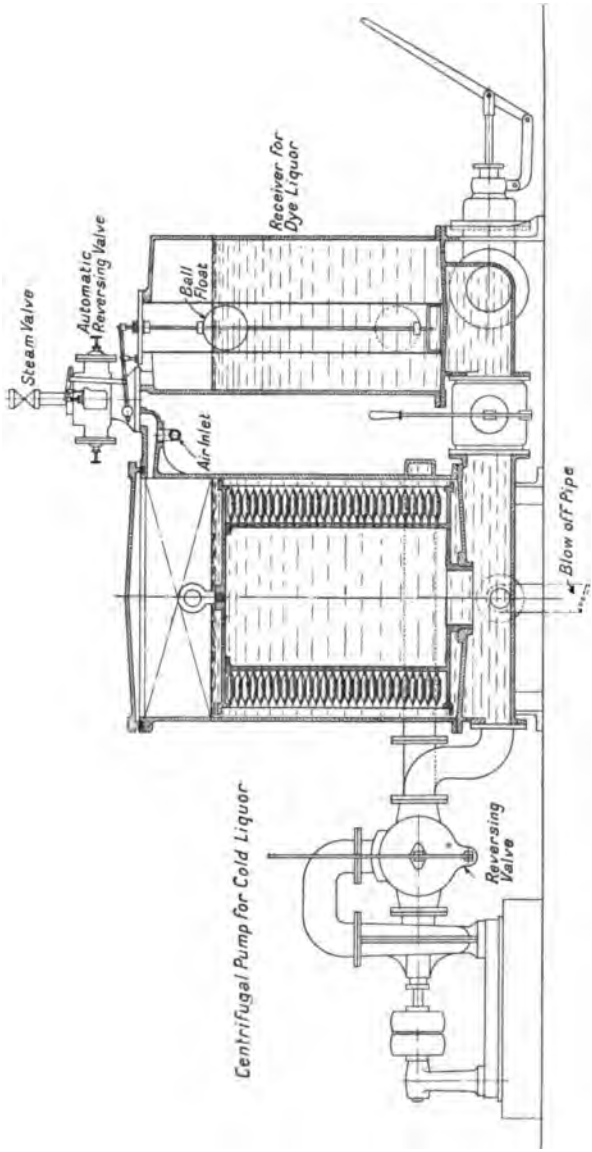

FIG. 83.—Patent Cop Dyeing Machine (Mather & Platt).

on its side, the outer perforated casing which holds the cops in position during dyeing is removed, when the cops readily drop out into boxes in which they are conveyed to the drying stove.

When dyeing in the cold, a centrifugal pump is employed, in place of steam pressure, for circulating the liquor. The flow of the dye-liquor is reversed by operating a special valve. The machine can be employed for dyeing cops spun either on *mules* or on *ring frames*; in the latter case it is necessary to spin the yarn on perforated "nickelin" tubes which fit the spindles of the ring frames, instead of spinning on the ordinary *pirn*. Cross-wound bobbins or cheeses, wound soft on to perforated paper tubes, can also be dyed in this machine. 50 lbs. to 130 lbs. of cops may be dyed at one time and the pump requires from 3 to 4 h.p. to drive.

Cheeses or cross-wound bobbins can be dyed on any of the machines described by employing suitable skewers. The liquor penetrates much more readily and fewer difficulties are, therefore, experienced in dyeing cheeses than in dyeing cops.

Special machines for dyeing cheeses have been constructed by Holle & Co., and by Mather & Platt. In the former, two cheeses are placed on one skewer, whilst in the latter the cheeses are packed into a perforated cylinder (not unlike the cylinder used in an Obermaier loose cotton dyeing machine), which revolves slowly. The dye-liquor is forced from the outside, through the material, towards the centre of the cylinder.

Drying of Cops.

Cops may be dried in special drying machines, such as Klug's (Fig. 79, p. 352), or they may be placed on hurdles and dried in ordinary stoves. The temperature in the stove should not be too high and the air should not circulate too freely, or certain colours will produce "bronziness" on the outside of the cops.

It is advisable to cover the cops, whilst in the drying stove, with a thin cloth in order to prevent unevenness.

The cops are usually *conditioned* after drying. For this purpose they are placed into large wicker baskets, covered with a damp cloth, and allowed to remain in a cellar, or room, containing a moist atmosphere, for two to three days. This is particularly necessary with cops which have been dyed in machines in which they have been tightly packed, because the cops have usually been pressed out of shape. The cop again obtains its original roundness as soon as it has been allowed to absorb the necessary amount of water.

Foam Dyeing.

In *Foam Dyeing*, first suggested by C. Wanke, the material is not actually brought into contact with the dye-liquor, but is dyed by the coloured foam produced by boiling the dye-liquor. This method is suited for dyeing hanks and cheeses, but it does not give satisfactory results when applied to cops. The simple apparatus shown in Fig. 84 consists of a wooden box, 1 m. square by 1·6 to 1·8 m. high, which is provided with a closed steam coil, 4 to 5 cm. diameter. The material (about 1½ to 2 cwt.) is placed into a cage made of lattice work, supported by feet, by means of which it is raised about 0·25 m. from the floor of the dye-vessel.

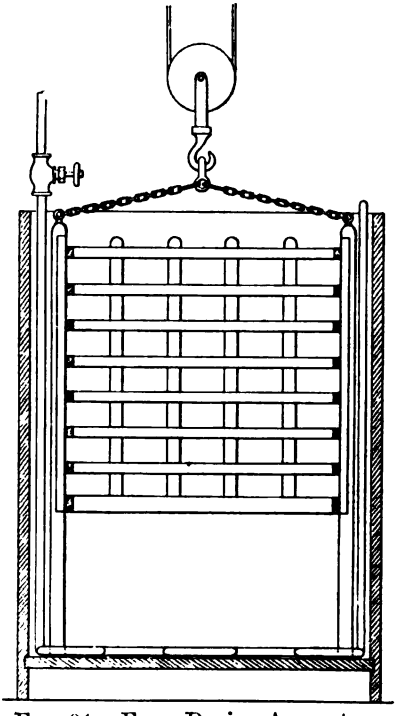

Fig. 84.—Foam Dyeing Apparatus.

The dye-liquor in the vat must not reach up to the bottom of the cage. In order to produce frothing of the liquor, a small quantity of soap or Turkey-red oil is added. No salt should be added when dyeing with the substantive cotton dyestuffs, whilst the necessary amount of sodium sulphide should be added when sulphur dyestuffs are used.

The dyeing operation is carried out as follows: The dye-liquor in the vat is heated to the boil, the cage containing the dry cheeses or hanks is placed into the vat, and sufficient steam is turned on in order to keep the material practically covered by the foam.

Although the amount of steam consumed is considerable, foam dyeing is extensively used, chiefly on account of the simplicity and the cheapness of the apparatus.

Dyeing of Cotton Warps.

Sometimes cotton is dyed in the hank and afterwards made into warps. It is, however, more convenient and much cheaper to dye the warp in special warp dyeing machines. According to the number of compartments or boxes through which the warp has to pass we have *single-box, two-box, three-box,* and *four-box warp dyeing machines.*

For dyeing special colours, such as catechu brown, logwood black, etc., warp dyeing machines consisting of even a larger number of boxes are used. (See "Catechu" and "Logwood.")

Fig. 85 illustrates a *Four-Box Warp Dyeing Machine* of J. Jackson, of Todmorden.

It consists of three dye-becks made of pitch pine, 3 inches thick

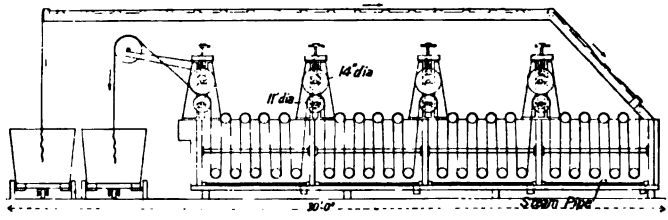

Fig. 85.—Four-Box Warp Dyeing Machine.

provided with the necessary steam-heating pipes, guide rods, and draw-off valves. Each compartment is fitted with four copper guide rollers above and five below the surface of the dye-liquor. Squeezing rollers—the bottom ones made of iron, the top ones of sycamore—are placed between each compartment, and also at the delivery end of the machine. Pressure is applied to the rollers by means of screws and springs, or, in some machines, by levers and weights. The warps travel in the direction of the arrow, over the lattice-work, into the first box. They are guided up and down over the copper rollers, then through the first set of squeezing rollers into the second box, and so on, until they leave the machine, after having passed through the last set of squeezing rollers. The boxes may all contain the same kind of liquor or they may be charged with different liquors. The dimensions of the machine and the diameter of the rollers are given in the sketch. The speed of the

bottom squeezing rollers is about 30 revolutions per minute, and two to six warps are passed through the machine at one time. Some colours may be dyed in a single passage through the machine (one end), whilst others require two or more passages.

The top guide rollers should be placed below the surface of the dye-liquor if the machine is to be used for dyeing with the sulphur dyestuffs.

Cotton warps are now frequently dyed on the beam in special machines working on the principle of the "Pornitz" or the "Zittau" cop dyeing apparatus. Figs. 86 and 87 illustrate a *Warp Dyeing Machine* of U. Pornitz, in which the warp is treated in a closed vessel. The machine is particularly suited for dyeing with the sulphur dyestuffs. It consists of the cylindrical dye-vessel *A*, provided with a steam heating coil, which can be hermetically closed by means of lid *B*. The dye-liquor is alternately pressed and sucked through the warp by means of the steam duplex pump *C*, and the three-way valves *D* and *E*. The warps are wound on perforated beams and small waggons are used for transporting the same. After the warp has been placed into position in the dye-vessel *A*, the lid *B* is closed and the dye-liquor is alternately pressed and sucked through the warp. In order to conduct the washing in the apparatus, it should be connected to a high-pressure water supply. For the purpose of removing excess of

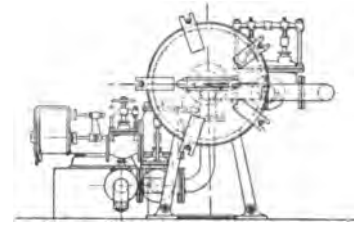

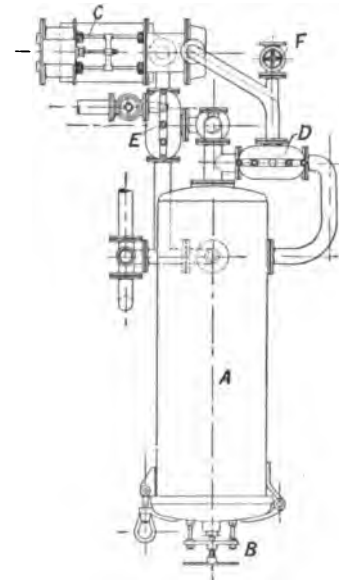

FIGS. 86, 87. — Elevation and plan of Pornitz's Warp Dyeing Machine.

moisture compressed air may be introduced through valve *F*. The washing may be conducted outside the apparatus by placing the beam on a special stand, to which the high-pressure water and the compressed air supply are connected. Length of apparatus, 3,500 mm., width, 2,000 mm., height, 1,500 mm. Six or even more warps may be conveniently dyed in one apparatus per day. It is impossible to sample during dyeing, and the apparatus can, therefore, only be employed for dyeing standard shades, chiefly blacks, where sampling is not required.

A similar apparatus, in which the dye-vat is open, may be used for dyeing with the substantive dyestuffs. It resembles

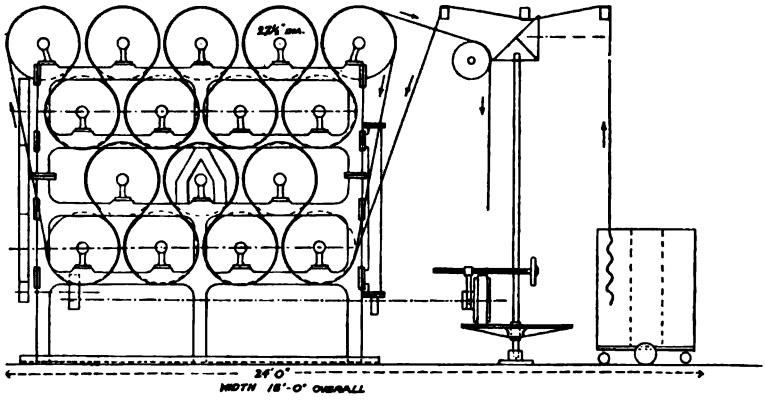

FIG. 88.—Sixteen-Cylinder Warp Drying Machine.

an older type of the Pornitz cop dyeing machine, in which the perforated cylinder is held in the dye-vat in a horizontal position.

The warps are usually dried on cylinders similar to those used in drying cotton piecegoods. A *Sixteen-Cylinder Warp Drying Machine*, of J. Jackson, Todmorden, driven by means of friction plate and pulley, which allow accurate adjustment of the speed, is shown in Fig. 88.

CRABBING.

Crabbing, a special scouring operation, which was formerly exclusively applied to *union piecegoods* (cotton warp and woollen weft) is now, however, also used in preparing cotton piecegoods, such as *linings*, for dyeing. It materially affects the

CALIFORNIA

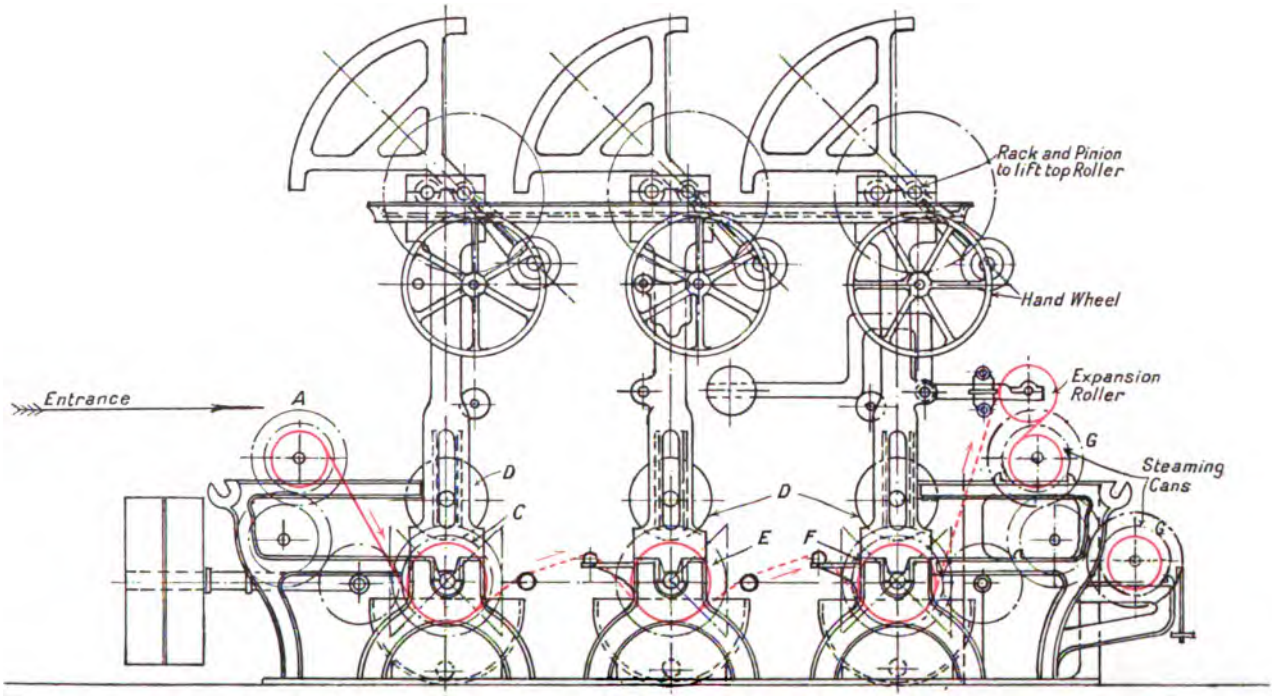

Side Elevation.

FIG. 89.—Treble Crabbing Machine.

finish, making the fibres brighter and giving the fabric a closer appearance.

Single, *double*, or *treble crabbing machines* are used, in which the pieces are crabbed once, twice, or three times respectively.

A *Treble Crabbing Machine* of Messrs. Knowles & Co. is shown in Fig. 89. Previous to the crabbing, the cloth is wound on the beam *A*, by means of a friction driven two-speed gear, which allows of the speed being varied in accordance with the diameter of the batch. From the roller *A*, which is provided with a brake, the cloth is wound under tension onto roller *C*. Considerable pressure is put on the cloth by means of the heavy iron roller *D*. The amount of pressure can be regulated by means of a rack and pinion connected to roller *D*. The first trough is usually filled with boiling water, to which sometimes a small amount of soda is added. The piece, when completely wrapped onto roller *C*, is allowed to revolve for some time in the hot water.

After this, the cloth is wound from roller *C* onto roller *E*, on which the operation is repeated. The second trough usually contains boiling water. The cloth is now crabbed a third time by winding it from roller *E* onto roller *F*, the third trough usually containing cold water.

For some classes of goods the crabbing is followed by steaming. The piece on roller *F* is wound on the perforated steaming roller *G*, when steam is blown through the fabric for about 10 minutes. From *G*, the cloth may be wound on a second steaming roller on which the steaming operation is repeated. Power required, 6 to 10 h.p.

Dyeing of Cotton Piecegoods.

The machine which is most commonly used in dyeing cotton piecegoods is the *Lancashire Jigger* illustrated in Fig. 90 (Sir James Farmer & Sons). It consists of the dye-beck made either of wood with cast-iron ends, or entirely of cast-iron, provided with the necessary guide rollers. In the jigger shown in the illustration, the vessel and the rollers are made of glazed earthenware. The steam-pipe is formed in the earthenware itself, and is provided with a number of perforations along the bottom of the vat. The outlet is also formed by this pipe, a

valve being placed at the end opposite to that at which the steam enters. In order to dye in a very "short" bath the jiggers are frequently built very narrow at the bottom.

In working the jigger, the cloth is drawn from the batch through the dye-liquor and wound onto another roller at the opposite side. One such passage of the cloth through the machine is termed "one end." This operation is repeated 4, 6,

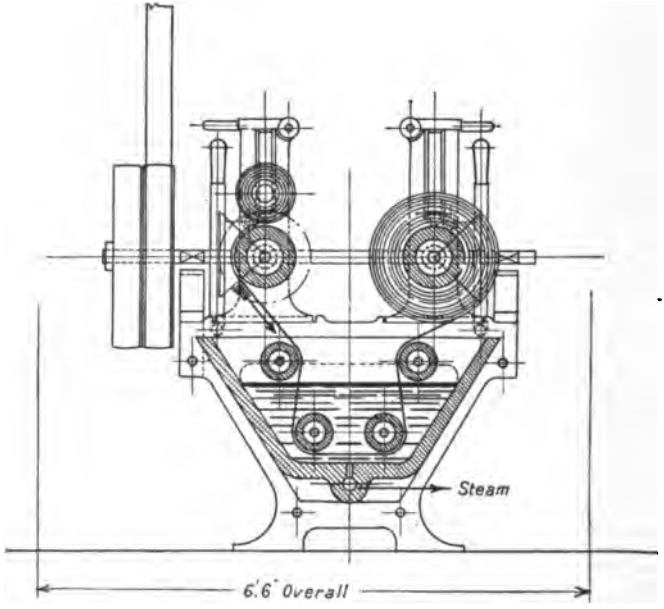

FIG. 90.—Lancashire Jigger.

or 8 times, and the cloth is ultimately run onto a batch-roller placed on top of one of the driven rollers.

The rollers are driven by means of bevel wheels and clutches, which receive the motion from a longitudinal shaft along which a number of jiggers are placed. A break is put on the roller from which the cloth is drawn in order to keep it at a uniform tension.

The speed of the cloth is about 45 yards per minute. Power required: 2 h.p.

In place of using live steam, it is sometimes preferable, *e.g.*, in dyeing with some of the substantive dyestuffs, to employ a closed steam coil.

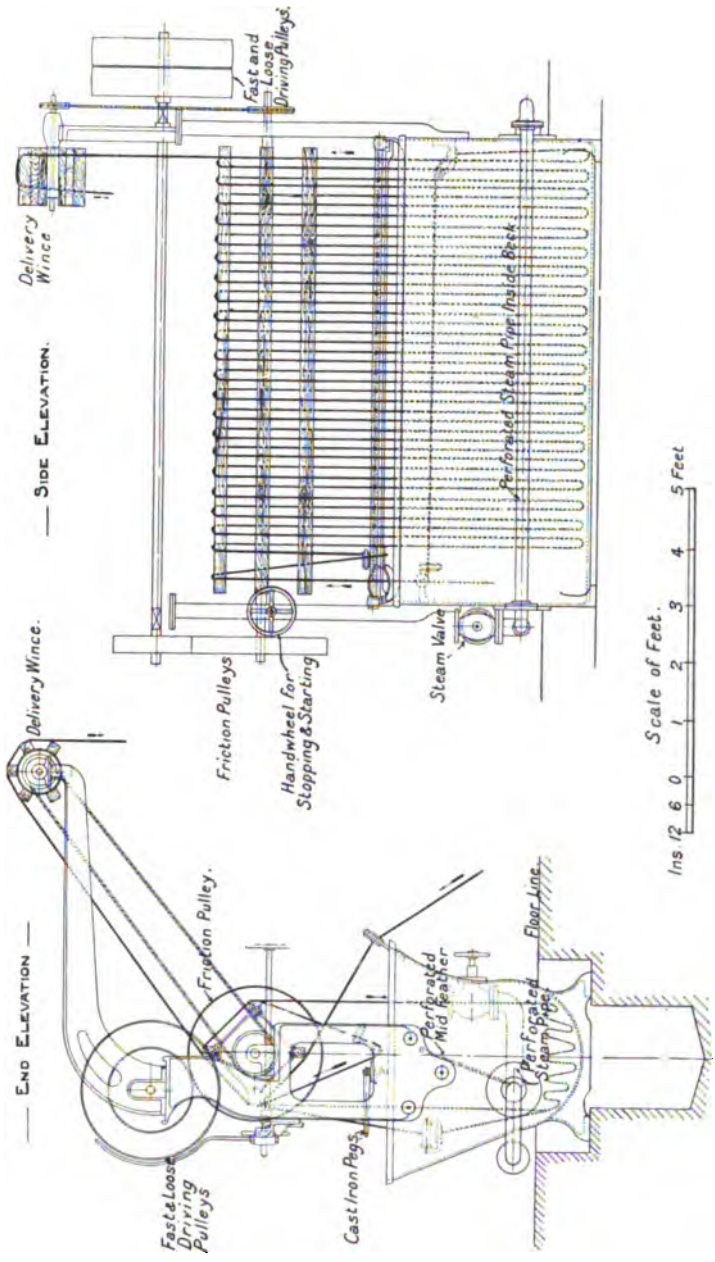

FIGS. 91, 92.—Dye-Beck.

UNIV. OF CALIFORNIA

The *Dye-Beck*, Figs. 91 (end elevation) and 92 (side elevation) (Mather & Platt), although chiefly used in print works, should be

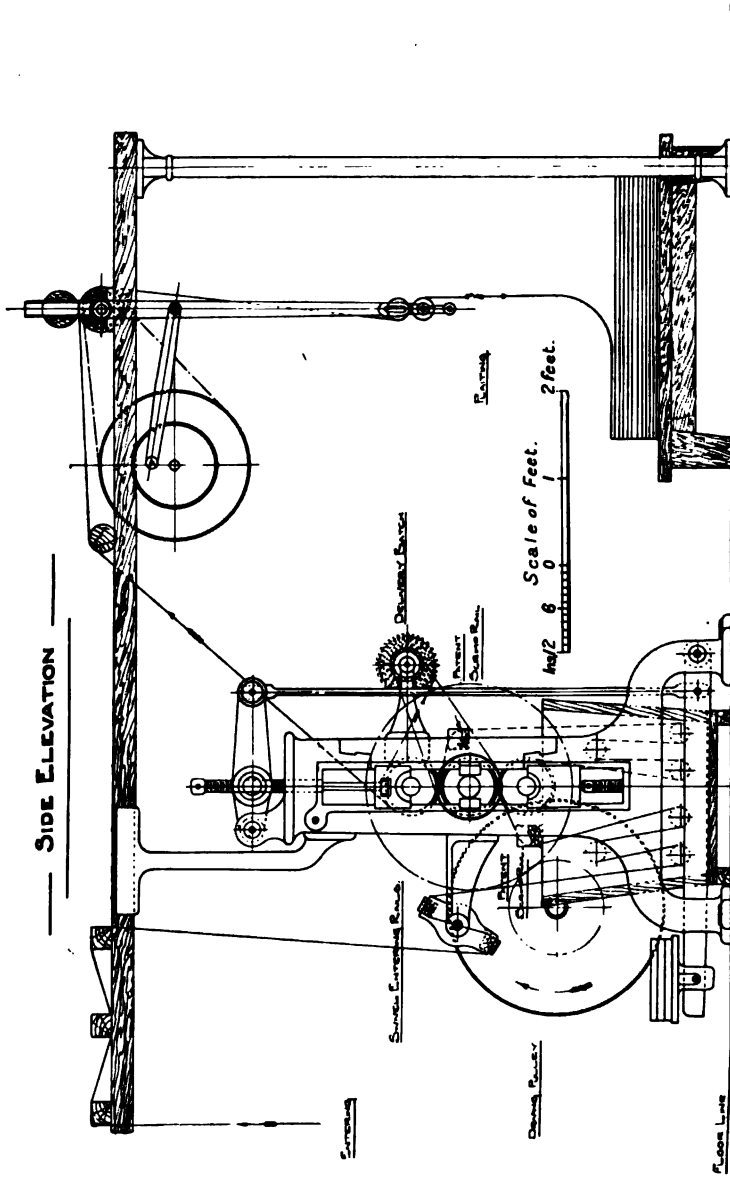

Fig. 93.—Three-Bowl Padding Machine.

mentioned here. The beck is generally made of cast-iron, from 8 feet to 9 feet long. A square wooden wince is provided over the centre of the beck, and over this the cloth, in the rope state, passes spirally many times. Each strand coming over the wince is piled loosely in the dye-beck. The various strands are kept apart by means of wood or earthenware guide pegs. The cloth travels spirally from one end of the beck to the other. The one end of the cloth coming out of the beck is brought back over guide rollers to the entering end of the beck and is then stitched to the other end of the cloth. In this manner the cloth may be passed through the machine continuously for any convenient length of time. About 1,000 yards of cloth can be treated in an 8-feet dye-beck at one time, and about 1 b.h.p. is required to drive the machine.

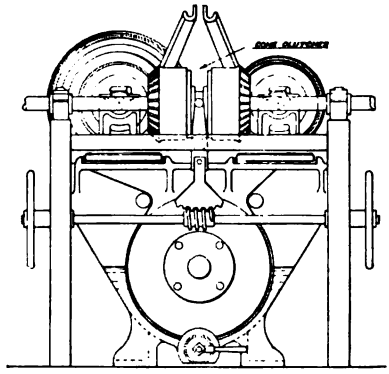

FIG. 94.—Walker's Jigger.

The *Padding Machine* may be used for preparing the cloth with beta-naphthol, for impregnating with the aniline solution in the dyeing of Aniline Black, and, as already stated, for dyeing of some of the substantive and the sulphur dyestuffs.

Fig. 93 shows a *Three-Bowl Padding Machine* of Messrs. Mather & Platt, Ltd. The cloth enters through the swivel entering rails into the liquor trough, which is provided with brass guide rollers. The excess of liquor is squeezed out by means of two India-rubber bowls and one brass bowl, which are weighted by compound levers. In order to ensure the cloth passing through the "nip" perfectly straight, a special "self-sharpening scrimp rail" is fixed in front of each nip. After squeezing, the cloth may be either batched or plaited down.

If necessary, the cloth may be passed once more through the liquor after the first nip.

The machine is driven by means of gearing with pulley provided with a friction clutch, and the power required to drive it, is from 6 to 8 h.p.

A special type of *Jigger* is the one illustrated in Fig. 94, built by Messrs. Samuel Walker & Co. It differs from the ordinary type in that a large well-balanced drum is placed in the dye-beck, by means of which the fabric is kept at the full width whilst passing through the dye-liquor. The jigger can be worked with a very small quantity of liquor, and it is claimed that better penetration of the fabric is obtained. Very little tension is exerted on the cloth lengthways, and it is, therefore, particularly suited for dyeing light fabrics.

Fig. 95 is a complete plan of a *Bleaching, Dyeing, Mercerising and Finishing Works*, prepared by Messrs. Mather & Platt.

UNIV. OF CALIFORNIA

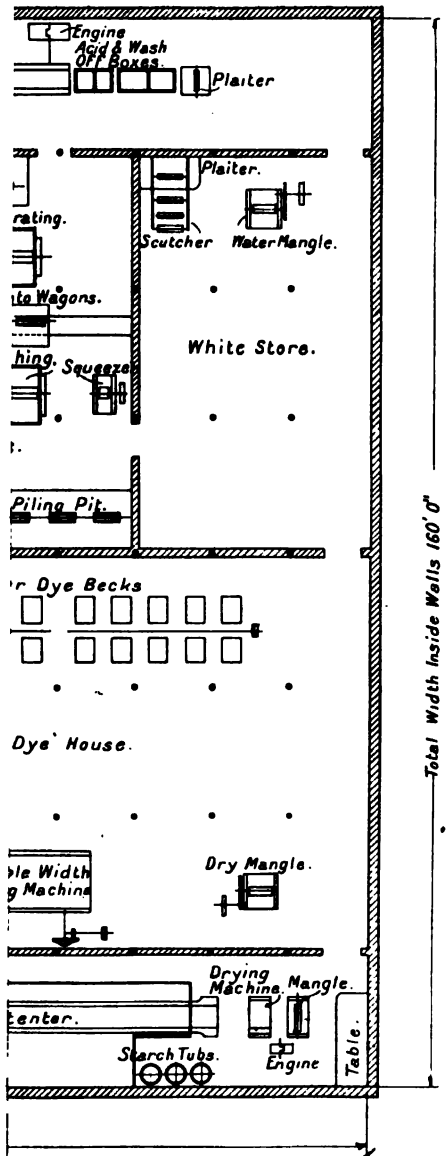

and Finishing Works.

PART XVII

TESTING OF DYESTUFFS AND FIBRES.

ANALYTICAL methods have been suggested by means of which it is possible to ascertain accurately the strength of certain dyestuffs. Of these may be mentioned the method suggested by Rawson of titrating basic colours with acid colours, *e.g.*, Night Blue with Naphthol Yellow S.[1] and the one suggested by Knecht of titrating dyestuff solutions with a solution of titanous chloride.[2]

These methods are chiefly applicable in cases where it is a question to ascertain the strength, whilst dye-trials are indispensable when it is necessary to ascertain the exact shade of the dyestuff. In many instances the strength of a dyestuff is of secondary importance, whilst brilliancy and shade are the principal considerations. Thus, for instance, a red or a yellow, although superior in strength, may be absolutely valueless if slightly duller than the standard dyestuff used.

The different types of *Colorimeter* which have been suggested have, comparatively speaking, been found of little practical value. Fairly reliable results can only be obtained if the dyestuffs, which have to be compared, are identical in shade and free from impurities.

In order to obtain results which are comparable with those obtained on an industrial scale, dyeing experiments should, as far as possible, be carried out under conditions which resemble those existing in the works. The artificial dyestuffs frequently contain foreign substances, such as dextrine, Glauber's salt, common salt, sugar, etc. Although it is true that in some instances such substances are added in order to produce a cheaper product, in many cases the addition is absolutely necessary for the standardisation of the dyestuff. Substances may also have to be added in order to increase the solubility of the dyestuff, whilst

[1] *Journ. Soc. Dyers and Colourists*, 1888, p. 82.
[2] *Ibid.*, 1903, p. 169; 1904, p. 97; 1905, p. 292.

in some cases the presence of salt and Glauber's salt in a dyestuff is due to the method of manufacture.

Mixtures of dyestuffs (when mixed in the powdered state) can usually be readily detected by blowing a small quantity of the dyestuff on to a wet sheet of filter paper, or onto strong sulphuric acid contained in a porcelain dish.

Another method consists in suspending a strip of filter paper in such a manner that the end dips into the dyestuff solution. The capillary attraction of different colouring matters varies, and it will, therefore, soon be noticed that zones are formed, the uppermost being colourless and containing water only, whilst the lower ones contain the different colouring matters. The detection of colouring matters by means of capillary analysis was suggested by Goppelsroeder.

Both the chemicals and the dyestuffs coming into the works ought to be regularly and systematically tested. Far too little attention is paid to this matter in many works. Serious mistakes might often be corrected, trouble avoided, and loss of time, material and labour saved, by the introduction of a proper system of testing.

Whilst quantitative chemical analyses are usually carried out with the necessary care and accuracy, the testing of the dyestuffs is often done with much less care. As a result disputes arise which might be easily avoided.

It should be pointed out, that in order to obtain reliable results in testing dyestuffs every part of the work must be carried out with the greatest accuracy and care.

Flasks, beakers, pipettes, etc., which are used, should be cleaned with strong sulphuric acid and thoroughly rinsed in water and finally in condensed water.

Except in special cases, a rule should be made to always weigh out the same quantity of dyestuff and to dissolve it in always the same number of c.c. of distilled water, in order to avoid mistakes.

The standard dyestuffs should be kept in well-stoppered bottles in a dry room.

The dyestuff (1 grm. or 2 grms.) is weighed and carefully transferred to a clean, perfectly dry flask.

The necessary quantity of boiling distilled water is measured in a cylinder and a small quantity is added to the dyestuff contained in the flask, which is immediately well shaken, in order

to moisten the colour particles and to make the whole into a paste. The remainder of the water is now added, the flask shaken a few times and placed into a boiling water-bath, in which the flasks are allowed to remain for a short time, being frequently shaken. If all the flasks belonging to one experiment are kept in the water-bath for the same length of time, re-measuring of the solution before pipetting is not necessary.

The strength of the solution naturally varies with different dyestuffs; it is usually either 1 per cent., $\frac{1}{2}$ per cent., or $\frac{1}{5}$ per cent. Whatever strength the solution is made, it is well to calculate the number of c.c. required, corresponding to the percentage of dyestuff, calculated on the quantity of material to be dyed.

The volume required is obtained by the following formula :—

$$\frac{\text{Weight of material to be dyed, in grammes} \times \text{per cent. of dyestuff required}}{\text{Strength of the dyestuff solution, in per cent.}}$$
$$= \text{volume in c.c. of dyestuff solution required.}$$

A simple system like this, if always adhered to, will in many cases avoid miscalculations and mistakes.

Dye beakers of glass or hard-glass may be used, but beakers of Berlin porcelain are best suited. The following sizes are chiefly used:—

	I.	II.	III.
Depth, Inches. . . .	$4\frac{1}{2}$	$5\frac{1}{2}$	$5\frac{3}{4}$
Width ,, . . .	$2\frac{1}{2}$	3	$3\frac{1}{2}$
Capacity, c.c. . . .	250	500	650

Size II. is usually employed for dyeing cotton hanks.

Glass rods are used to support the hanks or to turn the pieces; they should be bent for dyeing the sulphur and the vat dyestuffs.

Cotton hanks are more conveniently handled than pieces. The hanks should be laced with strings and the strings marked with knots, whilst pieces may be distinguished by cuts or by holes cut into them.

Large cotton hanks are best divided into small hanks each of about 10 grms. weight. In order to obtain a number of hanks equal in weight, without the necessity of reeling off some of the cotton, a large number of hanks should be divided, and by placing one hank on each side of the balance, those equal in weight are placed together into a bundle.

In order to obtain an idea of the strength of the sample to be tested, small quantities of both the standard solution and of the sample are poured on filter paper. Anybody skilled in colour testing will be able to at once decide as to what strengths should be dyed in order to obtain an accurate result.

It is the usual practice to dye the standard dyestuff one strength, and the sample three, four or more different strengths, one of which should ultimately be identical in strength with the standard shade. If one of the two samples appears much stronger than the other when poured on filter paper, it may be advisable to take a measured quantity of the stronger one, and to dilute it with water until it is approximately the same strength. In this manner it is quite easy, even in such a case, to obtain a satisfactory result the first time.

When testing Water Blues, Soluble Blues, Cotton Blues, etc., it is in many instances necessary to develop the colour on the filter paper by pouring weak sulphuric acid over it, before judging the depth of shade.

1 per cent. or 10 per cent. standard solutions of all the ingredients which have to be added to the dye-bath, such as Glauber's salts, soda, soap, etc., should always be made and kept handy.

When dyeing the substantive dyestuffs it is usually not necessary to wet out the hanks, because they may be entered into the boiling dye-bath.

For dyeing the basic dyestuffs, a number of hanks are mordanted at a time, and dried after thorough rinsing. Before dyeing, the hanks are placed into hot water and squeezed well by hand in order to wet them out evenly. They should then be wrung and thoroughly shaken. A small quantity of acetic acid or alum should be added to the dye-bath, the hanks entered cold and turned for some time rapidly. The beakers are then placed into the water-bath, which is gradually heated to the boil. They are now removed, and the hanks turned for some time in the cooling bath. The hanks are finally wrung and dried without rinsing.

Alizarines and other mordant dyestuffs are usually dyed on cloth which has either been padded with the mordant, or on which one or more mordants have been printed in stripes.

The substantive and the sulphur dyestuffs are best dyed on

hanks. The additions, such as soap, Glauber's salt, soda, etc., are used in the proportions given for dyeing these dyestuffs. The total amount of liquor, *i.e.*, water and dyestuff solution and additions, used in each beaker, must be the same in one and the same experiment. The dyeing is conducted for one hour at the boil. A water-bath charged with a solution of common salt or calcium chloride, or, preferably, with glycerine, may be used in order to produce the required temperature.

Each hank when removed from the bath should be carefully wrung over the beaker by means of two glass rods, and fresh hanks entered into the baths, in order to exhaust the dyestuff as completely as possible. These "exhausts" are valuable in ascertaining the exact strength of a sample. It will frequently be found, that when two hanks are equal in depth and shade, the exhausts may show a considerable difference in strength, a fact which would indicate that the dyestuff which gives the stronger exhaust, if used in a standing bath, will require the addition of smaller quantities of dyestuff for dyeing subsequent lots of material.

In some instancess the shades of the exhaust may give an indication as regards the purity of the dyestuff. A dyestuff which gives an exhaust which is duller in shade than the standard, should be considered as inferior.

If a sample consists of a mixture of different dyestuffs which do not possess the same affinity for the fibres, the exhausts will often reveal this fact, and thus the dyer may be able to avoid trouble when dyeing on a commercial scale.

Rinsing of the hanks after dyeing is not always necessary. A number of the substantive dyestuffs alter in shade during drying, and it is, therefore, necessary to allow the hanks to cool and to expose them to the air for some time before they are examined.

If in practice the dyestuff under examination is after-treated by one of the methods described, or if it is diazotised and developed or coupled with paranitraniline, two hanks should be dyed in each beaker, one of which is dried, whilst the other is after-treated.

The Dye-bath.—Whatever type of bath is used for heating the dye-beakers, the temperature must be the same in every part. Steam-heated baths have been suggested, but in these it

has been found exceedingly difficult to obtain even temperatures. Fig. 96 represents a simple type of *Water-Bath* which has been found to give very reliable results. It is heated by means of a closed steam-coil, but if steam is not available gas may be used in place of it. The steam-coil enters at the side, it passes out through the centre of the bath, and is connected to a steam-trap. Immediately above the steam-coil and underneath the false perforated bottom is placed a stirrer, which can be rotated from time to time by hand. Thus any unevenness in heating is readily equalised. The lid should fit tightly, but is loose in order to allow of its ready removal for the purpose of cleaning the bath. The holes for the beakers should be made fairly large and copper rings fitted with rubber rings, which fit tightly round the beakers, should be provided for holding them. As shown in the sketch, the beakers are held by the rings, and they do not touch the perforated bottom. The steam is carried away through a fairly long, wide outlet pipe, fixed at the back of the water-bath. The bath may be made to hold from six to twelve or more beakers at a time; but it is not advisable to build it to hold more than twelve beakers, this being about the largest number of hanks which can be turned conveniently and efficiently by one person.

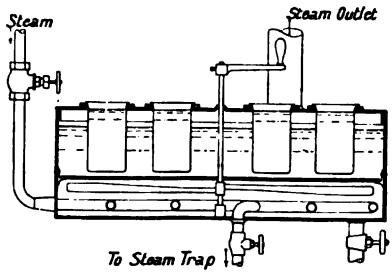

FIG. 96.—Experimental Dye-Bath.

DETECTION OF DYESTUFFS ON THE FIBRE.

A sound knowledge of the different methods of applying the various dyestuffs is absolutely essential in order to successfully determine the dyestuffs and mordants which have been used in dyeing textile materials.

For the purpose of a more exhaustive investigation the reader is referred to the excellent tables compiled by A. G. Green and others.[1]

[1] *Journ. Soc. Dyers and Colourists*, XXIII., p. 252, 1907.

The reactions suggested by G. E. Holden [1] will be found useful for the rapid identification of the principal dyestuffs used in cotton dyeing.

The principal reagents used are:—Chloroform and titanous chloride. The solubility of the azo-colours in the former was first noticed by R. Meldola, whilst the latter was recommended as a reagent for the identification of dyestuffs by E. Knecht.

1. *The pattern is boiled in water.* All shades dyed direct with the substantive cotton dyestuffs "bleed."

2. *The pattern is boiled with a solution of titanous chloride* (the reagent must be first boiled with a small quantity of hydrochloric acid to remove traces of sulphuretted hydrogen). The substantive cotton dyestuffs dyed direct or developed or coupled are discharged to white or yellow. The basic dyestuffs are in most cases completely discharged; the fibre remains a dull yellow or brown colour. The presence of tannate of titanium on the fibre can be confirmed by boiling the stripped pattern for a few seconds in a solution of logwood, when a dirty puce colour is obtained. The sulphur dyestuffs give off sulphuretted hydrogen. They are reduced by the action of titanous chloride, but on washing with water and exposure to air the colour returns. It should be mentioned that a number of the vat dyestuffs and further, materials which have been stripped with hydrosulphites and re-dyed with substantive dyestuffs, when boiled with titanous chloride, give off sulphuretted hydrogen.

3. *The pattern is treated with cold chloroform.* Insoluble in chloroform are: The substantive cotton dyestuffs, dyed direct, after-treated, diazotised and developed or coupled; the basic dyestuffs, when properly fixed; the sulphur dyestuffs; the Alizarines, except where otherwise stated in the tables; iron-buff and catechu brown. Other dyestuffs which are insoluble will be mentioned under the respective headings.

4. *A solution of bleaching powder,* 5° *Tw.*, with the addition of a small quantity of acetic acid, is used for distinguishing some of the dyestuffs.

[1] *Journ. Soc. Dyers and Colourists*, XXV., p. 47, 1909.

Reds, Pinks and Clarets.

	Chloroform.	Bleaching Powder Solution.
1. Paranitraniline Red.	Intense amber coloration.	—
2. Paranitroorthoanisidine Red	Reddish-orange coloration.	Not affected.
3. Azo Pink BB.	Reddish-orange coloration.	Bright yellow-orange.
4. Chloranisidine Red.	Reddish-orange coloration.	Very slowly discharged.
5. Thio Indigo Scarlet R.	Red-coloured solution.	—
6. Alpha-naphthylamine Claret.	Intense red-coloured solution.	—
7. Para Red and Direct Blue.	Intense amber coloration.	—
8. Indanthrene Claret G.	Slightly soluble, brownish-red solution.	—
9. Thio Indigo Red B.	Strong red fluorescent solution.	—
10. Vat Red B.	Strong red fluorescent solution.	—
11. Helindone Red 3 B.	Red-violet solution.	*Titanous chloride solution.*
12. Alizarine Red.	Insoluble.	Maroon-coloured fibre.
13. Rhodamine on tannin, chrome or alumina.	Delicate fluorescent tint.	—
14. Alizarine Bordeaux.	Insoluble.	Dirty brown.

Violets.

	Chloroform.	The Pattern is spotted with nitric acid.
1. Indanthrene Violets.	Reddish-violet fluorescent solution.	Grey-black spot.
2. Thio Indigo Red and Indigo mixtures.	Reddish-violet fluorescent solution.	Red-coloured spot.
3. Ciba Violet B.	Blue-violet solution.	—
4. Ciba Violet R.	Red-violet solution.	—

BROWNS.

	Chloroform.	Titanous Chloride.
1. Para Brown G & R coupled with para-nitraniline.	Brown coloration.	—
2. Benzidine on alpha- or beta-naphthol.	Red coloration.	—
3. Tolidine on alpha- or beta-naphthol.	Bluish-red coloration.	—
4. Para Red and direct or coupled blacks.	Amber coloration.	First red, gradually decolorised.
5. Para Red with Aniline black.	Amber coloration.	Slowly discharged to a brownish-black, becoming black on exposure.
6. Catechu brown.	Very little acted upon.	—

YELLOWS AND ORANGES.

	Chloroform.	Titanous Chloride.
1. Indanthrene Orange RT.	Insoluble.	Reduced to an orange.
2. Indanthrene Yellow.	Slightly soluble, yellow coloration.	Blue.
3. Algole Yellows.	Slightly soluble, yellow coloration.	Very little altered.
4. Algole Orange R.	Reddish-orange solution.	—
5. Primuline developed with phenol, or resorcine.	Insoluble.	Bright yellow; diazotised and developed with beta-naphthol, red.
6. Primuline developed with bleaching powder solution.	Insoluble.	Brown; cannot be diazotised and developed.
7. Metanitraniline and nitrotoluidine developed on the fibre.	Very soluble, intense orange-coloured solution.	—

Alizarine Yellow and Orange.—Incinerate and test the ash for mordants.

Chrome Yellow and Orange.—Spot with ammonium sulphide, blackened.

Greens.

	Chloroform.	Titanous Chloride.
1. Algole Green B.	Insoluble.	Reddish-blue or blue.
2. Algole Dark Green B.	Slightly soluble; olive-coloured solution.	Reddish-brown.
3. Indanthrene Green B.	Slightly soluble; greenish-blue solution.	Grenat colour.
4. Indanthrene Blue RS and Indanthrene Yellow mixtures.	Bright yellowish-green solution.	Dirty blue to violet.
5. Brilliant Green.	Green solution.	Dull yellow to brown coloured fibre.
6. Malachite Green.	Green solution.	Dull yellow to brown coloured fibre.

Blues.

	Chloroform.	Titanous Chloride.
1. Alizarine Blue.	Blue solution.	Brownish-black; becomes bluer on exposure.
2. Indigo Blue.	Blue solution.	Decolorised; very dark shades, fibre olive to blue tinted.
3. Ciba Blues.	Very soluble; very bright blue solution.	Green to olive.
4. Dianisidine Blue.	Violet solution.	—
5. Indanthrene Blue RS.	Slightly soluble; blue coloration.	—
6. Indanthrene Blue RC.	Blue-violet fluorescent solution.	—
7. Indanthrene Dark Blue BO.	Very slightly soluble; bluish-green solution with red fluorescence.	—
8. Indanthrene Dark Blue BT.	—	—
9. Algole Blue 3 G.	Slightly soluble; blue coloration.	Black.
10. Algole Blue CF.	Slightly soluble; blue coloration.	Grenat shade.

Spot the pattern with strong nitric acid:—Ciba Blues are slowly acted upon; brown spot, which gradually changes to a

light dirty blue tint. Indigo gives a yellow spot surrounded by a green rim.

BLACKS.

	Chloroform.	Titanous Chloride.
1. Direct Blacks.	Insoluble.	Decolorised.
2. Direct Blacks, diazotized and developed, or coupled.	Insoluble.	Decolorised.
3. Basic Black, on tannin and antimony, or iron mordant.	Insoluble.	Dull yellow to brown.
4. Logwood Blacks.	Insoluble.	—
5. Azophor Blacks.	Very soluble, red-violet to blue-violet solution.	—
6. Aniline and Diphenyl Blacks.	Insoluble.	Brown.
7. Naphthalene and Anthracene Mordant dyestuffs on Chrome.	Insoluble.	Brown to brownish-black.
8. Sulphur Blacks.	Insoluble.	Brown; giving off sulphuretted hydrogen.

Logwood Black.—Boiled with dilute hydrochloric acid the colour is stripped, solution red or orange.

Pattern Treated with Bleaching Powder Solution, 5° Tw., then add a little acetic acid; allow to stand, pour off the liquid, sour with cold acetic acid, and wash:—*Chrome Mordant Dyestuffs* are discharged, fibre yellow to yellowish-brown. Test also for chromium.

Prussiate Aniline Blacks.—Fibre olive to green coloured.

Other Aniline Blacks and Diphenyl Black.—Fibre red-brown.

TESTING THE FASTNESS OF DYESTUFFS.

It may be of importance in many cases to ascertain the fastness of a dyestuff to washing, light, bleaching, etc. In order to carry out the tests, the dyestuff should be dyed on the material on which it is to be actually used, and by the method of dyeing which is employed in the works. The kind of test and the strength of the testing solutions will naturally have to be

chosen in accordance with requirements. It is, therefore, impossible to give hard and fast rules for testing, but the following tests may be taken as typical :—

Washing Test.—White and dyed yarn are plaited together and boiled for 10 to 20 minutes in a $\frac{1}{10}$ to 1 per cent. solution of soap. The soap should be absolutely neutral. Marseilles soap may be used for this purpose. In order to ascertain how the dyestuff will behave in the laundry, the plaited hank should be boiled with a solution of soap to which a small quantity (0·5 per cent.) of soda ash has been added. After boiling for 20 to 30 minutes, roll up the hank in a piece of white calico and wring well by hand.

Fastness to Water.—In order to ascertain the fastness to water and to "bleeding," the dyed yarn should be plaited together with a white hank and boiled in distilled water for 10 to 20 minutes. In many cases (substantive cotton dyestuffs) this test is more severe than boiling with soap or soap and soda.

Fastness to Acids.—This test is chiefly applied to the substantive cotton dyestuffs. The dyed material is immersed for some time in a 5 per cent. solution of acetic acid or a weaker solution of sulphuric or hydrochloric acid. Shades dyed on cotton warps which have to be cross-dyed should not change when boiled for $\frac{1}{2}$ hour in a $\frac{1}{10}$ per cent. solution of sulphuric acid.

Fastness to Bleaching.—When testing the fastness of a dyestuff to bleaching it is necessary to pass the dyed hank through all the operations through which it would have to be taken in the works. It is, therefore, necessary to first ascertain its fastness to boiling. If kiers are available, it is best to boil the dyed pattern along with yarn which is being boiled for bleaching. The "ash boil" should be conducted in an open kier for 6 to 8 hours, whilst the "caustic boil" should be carried out under pressure (about 15 lbs.) with soda lye at 2° Tw., for 8 to 10 hours. An open kier is used for the "lime boil"; time of boiling from 4 to 6 hours. In order to ascertain the fastness to chlorine, the boiled hank is now immersed for about 1 hour in a bleaching powder solution at 1° to $1\frac{1}{2}$° Tw. The hank is finally washed, soured, washed and dried.

Fastness to Rubbing.—The dyed material is rubbed on a piece of white calico or on a sheet of white paper.

Fastness to Hot-pressing or Steaming.—Dyestuffs which change their shade or which volatilise from the fibre are unsuitable for hot-press finishes. In order to ascertain the fastness to hot-pressing, the pattern may be placed between sheets of filter paper and pressed with a heated flat-iron.

Fastness to Street Dirt and Mud.—The dyed pattern is either spotted with a 10 per cent. solution of sodium carbonate or with quicklime made into a paste with water, allowed to dry in the air and brushed.

Fastness to Perspiration.—Various tests have been suggested for this purpose. The pattern may be exposed to the perspiration of a horse by placing it under the saddle. Ermen suggests the following test: 10 c.c. of glacial acetic acid and 10 grms. of common salt are dissolved in 100 c.c. of water. Immerse the dyed pattern in this solution, heat gradually to 60° C., remove the pattern and allow to dry at the temperature of the air, brush off the crystalline deposit and compare with the original pattern.

Fastness to Light.—The dyed pattern, partly covered with cardboard, should be exposed both under glass and also in the open air, along with a pattern dyed with a standard dyestuff of known fastness. The action of the light may be accelerated by spraying water, by means of a flower-spray, from time to time, on the patterns.

F. V. Kallab has designed a very useful apparatus in which the patterns are exposed to sunlight which passes through a suitable condenser. The apparatus is provided with a clock by means of which the position of both the condenser and the patterns changes with that of the sun.

Very powerful electric arc lamps, of the searchlight type employed on ships, are also used for exposing dyed patterns in place of sunlight, but the results are not always comparable with those obtained by exposure to sunlight.

Examination of the Textile Fibres.

In nearly every case the textile fibres may be readily distinguished from each other by means of the microscope. The following reactions may be applied in addition:—

Burning.—The animal fibres, wool and silk, burn slowly; the

smoke has the smell of burnt horn, and gives an alkaline reaction. The vegetable fibres burn more quickly; the smoke has an acid reaction.

Boiling Caustic Soda Lye.—The animal fibres are soluble, the vegetable fibres insoluble. Hemp and jute (lignified fibres) turn yellow or yellowish brown.

Alkaline Lead Solution (*Plumbite of Soda*).—Wool becomes brown to black when treated with a warm solution obtained by adding caustic soda to a solution of acetate of lead.

Sulphuric Acid, 168° *Tw.*—Wool insoluble, silk and the vegetable fibres dissolve.

Ammoniacal Cupric Oxide Solution (Schweitzer's Reagent).—Insoluble are wool, jute, Chinagrass and Chardonnet silk; soluble are silk, cotton, linen and the other artificial silks.

Ligno Celluloses (*Jute*) are coloured red with a solution of phloroglucinol in alcohol and hydrochloric acid.

The artificial silks lose considerably in strength when moistened with water; natural silk is not affected.

Chardonnet Silk (*Nitrocellulose Silk, Collodion Silk*) turns blue with a solution of diphenylamine in strong sulphuric acid.

Chardonnet Silk is dyed strongly with basic dyestuffs (Methyl Violet), whilst the other artificial silks (*Pauly Silk, Glanzstoff, Viscose Silk*) dye much lighter shades.

PART XVIII

APPENDIX

Table of the Elements, their Symbols and Atomic Weights (1911).

Oxygen = 16.

Aluminium	Al	27·10	Neodymium	Nd	144·30
Antimony	Sb	120·20	Neon	Ne	20·20
Argon	Ar	39·88	Nickel	Ni	58·68
Arsenic	As	74·96	Niobium	Nb	93·50
Barium	Ba	137·37	Nitrogen	N	14·01
Beryllium	Be	9·10	Osmium	Os	190·90
Bismuth	Bi	208·00	Oxygen	O	16·00
Boron	B	11·00	Palladium	Pd	106·70
Bromine	Br	79·92	Phosphorus	P	31·04
Cadmium	Cd	112·40	Platinum	Pt	195·20
Cæsium	Cs	132·81	Potassium	K	39·10
Calcium	Ca	40·09	Praseodymium	Pr	140·60
Carbon	C	12·00	Radium	Ra	226·40
Cerium	Ce	140·25	Rhodium	Rh	102·90
Chlorine	Cl	35·46	Rubidium	Rb	85·45
Chromium	Cr	52·00	Ruthenium	Ru	101·70
Cobalt	Co	58·97	Samarium	Sm	150·40
Copper	Cu	63·57	Scandium	Sc	44·10
Dysprosium	Dy	162·50	Selenium	Se	79·20
Erbium	Er	167·40	Silicon	Si	28·30
Europium	Eu	152·00	Silver	Ag	107·88
Fluorine	Fl	19·00	Sodium	Na	23·00
Gallium	Ga	69·90	Strontium	Sr	87·63
Gadolinium	Gd	157·30	Sulphur	S	32·07
Germanium	Ge	72·50	Tantalum	Ta	181·00
Gold	Au	197·20	Tellurium	Te	127·50
Helium	He	3·99	Terbium	Tb	159·20
Hydrogen	H	1·008	Thallium	Tl	204·00
Indium	In	114·80	Thorium	Th	232·40
Iodine	I	126·92	Thulium	Tu	168·50
Iridium	Ir	193·10	Tin	Sn	119·00
Iron	Fe	55·85	Titanium	Ti	48·10
Krypton	Kr	82·90	Tungsten	W	184·00
Lanthanum	La	139·00	Uranium	U	238·50
Lead	Pb	207·10	Vanadium	V	51·06
Lithium	Li	6·94	Xenon	X	130·20
Lutetium	Lu	174·00	Ytterbium	Yb	172·00
Magnesium	Mg	24·32	Yttrium	Y	89·00
Manganese	Mn	54·93	Zinc	Zn	65·37
Mercury	Hg	200·00	Zirconium	Zr	90·60
Molybdenum	Mo	96·00			

Hydrometers.

In the works the specific gravity of a liquid is usually determined by means of the hydrometer. Two types are employed—the specific gravity hydrometer, by means of which the specific gravity can be directly ascertained, and the hydrometers which are graduated in degrees. In England, the Twaddle hydrometer is generally used. The degrees Twaddle bear a direct relationship to the specific gravity, whilst this is not the case in the Beaumé hydrometer which is in use on the Continent.

Conversion of degrees Twaddle into specific gravity:—

$$\text{Specific gravity} = \frac{\text{degrees Tw.} \times 5 + 1{,}000}{1{,}000}$$

Conversion of specific gravity into degrees Twaddle:—

$$\text{Degrees Twaddle} = \frac{\text{specific gravity} \times 1{,}000 - 1{,}000}{5}$$

Whilst Beaumé hydrometers are provided for liquids lighter than water, the specific gravities are given for these liquids in England.

Beaumé's Hydrometer.—

For liquids lighter than water:—The point to which the hydrometer sinks into a solution of 1 part of common salt in 9 parts of water is marked 0°, whilst the one to which it sinks into pure water is marked 10°.

For liquids heavier than water:—The point to which the hydrometer sinks in pure water is marked 0°, and the point to which it sinks in a 10 per cent. solution of common salt (at 17° C.) is marked 10°.

The "rational scale" of the hydrometer is obtained by taking as 0°, the point to which the hydrometer sinks in pure water at 15° C., whilst the point to which it sinks in pure sulphuric acid, of specific gravity 1,842 (at 15° C.), is marked 66°.

Comparative Table of Hydrometer Degrees Twaddle, Beaumé and Specific Gravities at 50° F.

Sp. Gr.	Degrees Beaumé.	Degrees Twaddle.	Sp. Gr.	Degrees Beaumé.	Degrees Twaddle.
1·000	0·0	0	1·220	26·0	44
1·005	0·7	1	1·225	26·4	45
1·010	1·4	2	1·230	26·9	46
1·015	2·1	3	1·235	27·4	47
1·020	2·7	4	1·240	27·9	48
1·025	3·4	5	1·245	28·4	49
1·030	4·1	6	1·250	28·8	50
1·035	4·7	7	1·255	29·3	51
1·040	5·4	8	1·260	29·7	52
1·045	6·0	9	1·265	30·2	53
1·050	6·7	10	1·270	30·6	54
1·055	7·4	11	1·275	31·1	55
1·060	8·0	12	1·280	31·5	56
1·065	8·7	13	1·285	32·0	57
1·070	9·4	14	1·290	32·4	58
1·075	10·0	15	1·295	32·8	59
1·080	10·6	16	1·300	33·3	60
1·085	11·2	17	1·305	33·7	61
1·090	11·9	18	1·310	34·2	62
1·095	12·4	19	1·315	34·6	63
1·100	13·0	20	1·320	35·0	64
1·105	13·6	21	1·325	35·4	65
1·110	14·2	22	1·330	35·8	66
1·115	14·9	23	1·335	36·2	67
1·120	15·4	24	1·340	36·6	68
1·125	16·0	25	1·345	37·0	69
1·130	16·5	26	1·350	37·4	70
1·135	17·1	27	1·355	37·8	71
1·140	17·7	28	1·360	38·2	72
1·145	18·3	29	1·365	38·6	73
1·150	18·8	30	1·370	39·0	74
1·155	19·3	31	1·375	39·4	75
1·160	19·8	32	1·380	39·8	76
1·165	20·3	33	1·385	40·1	77
1·170	20·9	34	1·390	40·5	78
1·175	21·4	35	1·395	40·8	79
1·180	22·0	36	1·400	41·2	80
1·185	22·5	37	1·405	41·6	81
1·190	23·0	38	1·410	42·0	82
1·195	23·5	39	1·415	42·3	83
1·200	24·0	40	1·420	42·7	84
1·205	24·5	41	1·425	43·1	85
1·210	25·0	42	1·430	43·4	86
1·215	25·5	43	1·435	43·8	87

COMPARATIVE TABLE OF HYDROMETER DEGREES TWADDLE, BEAUMÉ AND SPECIFIC GRAVITIES AT 50° F.—*continued.*

Sp. Gr.	Degrees Beaumé.	Degrees Twaddle.	Sp. Gr.	Degrees Beaumé.	Degrees Twaddle.
1·440	44·1	88	1·655	57·1	131
1·445	44·4	89	1·660	57·4	132
1·450	44·8	90	1·665	57·7	133
1·455	45·1	91	1·670	57·9	134
1·460	45·4	92	1·675	58·2	135
1·465	45·8	93	1·680	58·4	136
1·470	46·1	94	1·685	58·7	137
1·475	46·4	95	1·690	58·9	138
1·480	46·8	96	1·695	59·2	139
1·485	47·1	97	1·700	59·5	140
1·490	47·4	98	1·705	59·7	141
1·495	47·8	99	1·710	60·0	142
1·500	48·1	100	1·715	60·2	143
1·505	48·4	101	1·720	60·4	144
1·510	48·7	102	1·725	60·6	145
1·515	49·0	103	1·730	60·9	146
1·520	49·4	104	1·735	61·1	147
1·525	49·7	105	1·740	61·4	148
1·530	50·0	106	1·745	61·6	149
1·535	50·3	107	1·750	61·8	150
1·540	50·6	108	1·755	62·1	151
1·545	50·9	109	1·760	62·3	152
1·550	51·2	110	1·765	62·5	153
1·555	51·5	111	1·770	62·8	154
1·560	51·8	112	1·775	63·0	155
1·565	52·1	113	1·780	63·2	156
1·570	52·4	114	1·785	63·5	157
1·575	52·7	115	1·790	63·7	158
1·580	53·0	116	1·795	64·0	159
1·585	53·3	117	1·800	64·2	160
1·590	53·6	118	1·805	64·4	161
1·595	53·9	119	1·810	64·6	162
1·600	54·1	120	1·815	64·8	163
1·605	54·4	121	1·820	65·0	164
1·610	54·7	122	1·825	65·2	165
1·615	55·0	123	1·830	65·5	166
1·620	55·2	124	1·835	65·7	167
1·625	55·5	125	1·840	65·9	168
1·630	55·8	126	1·845	66·1	169
1·635	56·0	127	1·850	66·3	170
1·640	56·3	128	1·855	66·5	171
1·645	56·6	129	1·860	66·7	172
1·650	56·9	130	1·865	67·0	173

Comparative Table of Hydrometer Degrees Beaumé, Twaddle and Specific Gravities at 12·5° C.

Sp. Gr.	Degrees Baumé.	Degrees Twaddle.	Sp. Gr.	Degrees Baumé.	Degrees Twaddle.
1·000	0	0·0	1·252	29	50·4
1·007	1	1·4	1·263	30	52·6
1·014	2	2·8	1·274	31	54·8
1·022	3	4·4	1·285	32	57·0
1·029	4	5·8	1·297	33	59·4
1·037	5	7·4	1·308	34	61·6
1·045	6	9·0	1·320	35	64·0
1·052	7	10·4	1·332	36	66·4
1·060	8	12·0	1·345	37	69·0
1·067	9	13·4	1·357	38	71·4
1·075	10	15·0	1·370	39	74·0
1·083	11	16·6	1·383	40	76·6
1·091	12	18·2	1·397	41	79·4
1·100	13	20·0	1·410	42	82·0
1·108	14	21·6	1·424	43	84·8
1·116	15	23·2	1·438	44	87·6
1·125	16	25·0	1·453	45	90·6
1·134	17	26·8	1·468	46	93·6
1·142	18	28·4	1·483	47	96·6
1·152	19	30·4	1·498	48	99·6
1·162	20	32·4	1·514	49	102·8
1·171	21	34·2	1·530	50	106·0
1·180	22	36·0	1·546	51	109·2
1·190	23	38·0	1·563	52	112·6
1·200	24	40·0	1·580	53	116·0
1·210	25	42·0	1·597	54	119·4
1·220	26	44·0	1·615	55	123·0
1·231	27	46·2	1·635	56	126·8
1·241	28	48·2			

Comparison of Thermometric Scales.

° C. = degrees Centigrade; ° R. = degrees Réaumur; ° F. = degrees Fahrenheit.

Conversion of degrees of one into degrees of another scale:—

$$^\circ\text{C.} = \frac{^\circ\text{R.}}{4}\cdot 5; \quad ^\circ\text{C.} = (^\circ\text{F.} - 32)\cdot\frac{5}{9};$$

$$^\circ\text{R.} = \frac{^\circ\text{C.}}{5}\cdot 4; \quad ^\circ\text{R.} = (^\circ\text{F.} - 32)\cdot\frac{4}{9};$$

$$^\circ\text{F.} = \frac{^\circ\text{C.}}{5}\cdot 9 + 32; \quad ^\circ\text{F.} = \frac{^\circ\text{R.}}{4}\cdot 9 + 32.$$

Centigrade.	Réaumur.	Fahrenheit.	Centigrade.	Réaumur.	Fahrenheit.	Centigrade.	Réaumur.	Fahrenheit.
+100	+80·0	+212·0	+53	+42·4	+127·4	+6	+4·8	+42·8
99	79·2	210·2	52	41·6	125·6	5	4·0	41·0
98	78·4	208·4	51	40·8	123·8	4	3·2	39·2
97	77·6	206·6	50	40·0	122·0	3	2·4	37·4
96	76·8	204·8	49	39·2	120·2	2	1·6	35·6
95	76·0	203·0	48	38·4	118·4	1	0·8	33·8
94	75·2	201·2	47	37·6	116·6	0	0·0	32·0
93	74·4	199·4	46	36·8	114·8	−1	−0·8	30·2
92	73·6	197·6	45	36·0	113·0	2	1·6	28·4
91	72·8	195·8	44	35·2	111·2	3	2·4	26·6
90	72·0	194·0	43	34·4	109·4	4	3·2	24·8
89	71·2	192·2	42	33·6	107·6	5	4·0	23·0
88	70·4	190·4	41	32·8	105·8	6	4·8	21·2
87	69·6	188·6	40	32·0	104·0	7	5·6	19·4
86	68·8	186·8	39	31·2	102·2	8	6·4	17·6
85	68·0	185·0	38	30·4	100·4	9	7·2	15·8
84	67·2	183·2	37	29·6	98·6	10	8·0	14·0
83	66·4	181·4	36	28·8	96·8	11	8·8	12·2
82	65·6	179·6	35	28·0	95·0	12	9·6	10·4
81	64·8	177·8	34	27·2	93·2	13	10·4	8·6
80	64·0	176·0	33	26·4	91·4	14	11·2	6·8
79	63·2	174·2	32	25·6	89·6	15	12·0	5·0
78	62·4	172·4	31	24·8	87·8	16	12·8	3·2
77	61·6	170·6	30	24·0	86·0	17	13·6	1·4
76	60·8	168·8	29	23·2	84·2	18	14·4	−0·4
75	60·0	167·0	28	22·4	82·4	19	15·2	2·2
74	59·2	165·2	27	21·6	80·6	20	16·0	4·0
73	58·4	163·4	26	20·8	78·8	21	16·8	5·8
72	57·6	161·6	25	20·0	77·0	22	17·6	7·6
71	56·8	159·8	24	19·2	75·2	23	18·4	9·4
70	56·0	158·0	23	18·4	73·4	24	19·2	11·2
69	55·2	156·2	22	17·6	71·6	25	20·0	13·0
68	54·4	154·4	21	16·8	69·8	26	20·8	14·8
67	53·6	152·6	20	16·0	68·0	27	21·6	16·6
66	52·8	150·8	19	15·2	66·2	28	22·4	18·4
65	52·0	149·0	18	14·4	64·4	29	23·2	20·2
64	51·2	147·2	17	13·6	62·6	30	24·0	22·0
63	50·4	145·4	16	12·8	60·8	31	24·8	23·8
62	49·6	143·6	15	12·0	59·0	32	25·6	25·6
61	48·8	141·8	14	11·2	57·2	33	26·4	27·4
60	48·0	140·0	13	10·4	55·4	34	27·2	29·2
59	47·2	138·2	12	9·6	53·6	35	28·0	31·0
58	46·4	136·4	11	8·8	51·8	36	28·8	32·8
57	45·6	134·6	10	8·0	50·0	37	29·6	34·6
56	44·8	132·8	9	7·2	48·2	38	30·4	36·4
55	44·0	131·0	8	6·4	46·4	39	31·2	38·2
54	43·2	129·2	7	5·6	44·6	40	32·0	40·0

Basis of the Count Systems of Yarns.

CLASS I.

Length Units per Weight Unit = Count.

System.	Length Unit.	Weight Unit.	Yards per lb. of No. 1.
Cotton, English	840 yds.	1 lb.	840
Cotton, French	1,000 metres.	500 grms.	992·12
Linen . .	300 yds.	1 lb.	300
Worsted . .	560 yds.	1 lb.	560
Wool, French .	100 metres.	1,000 grms.	496

CLASS II.

Weight Units per Length Unit = Count.

Jute . .	14,400 yds.	1 lb.	14,400
Silk and artificial silk, denier .	476 metres.	533·33 deniers = 1 oz.	4,441,919
Silk, dram .	1,000 yds.	1 dram.	256,000

1 denier = 0·053 grm.
1 hank of cotton yarn measures 840 yds.
1 lea = 120 yds.
1 hank = 7 leas.

Of a No. 10 yarn, 10 hanks of 840 yds. each weigh 1 lb. and of a No. 40 yarn, 40 hanks of 840 yds. each weigh 1 lb.; but 1 lb. of 2/40s yarn contains 20 hanks of 840 yds. each, and 1 lb. of 3/60s yarn contains 20 hanks of 840 yds. each.

Table of Constants for comparing Counts of Yarns.

Class.	No. 1.	Cotton, English.	Cotton, French.	Worsted.	French Wool.	Linen.	Jute.	Silk and Artificial Silk, Deniers.	Silk Dram.
I.	Cotton, English	1·0	0·8·6	1·5	1·693	2·8	17·14	5288·0	304·76
	Cotton, French	1·181	1·0	1·772	2·0	3·308	14·51	4477·2	257·935
	Worsted	0·6	0·5642	1·0	1·129	1·86	25·714	7932·0	457·143
	Wool, French	0·5905	0·5	0·8858	1·0	1·654	29·039	8954·4	516·07
	Linen	0·3571	0·3023	0·5357	0·6048	1·0	48·0	14806·4	853·3
II.	Jute	17·14	14·51	25·714	29·029	48·0	1·0	308·47	17·7
	Silk and Artificial Silk, Denier	5288·0	4477·2	7932·0	8954·4	14806·4	0·003242	1·0	0·05763
	Silk, Dram	304·76	257·935	457·143	516·07	853·3	0·05625	17·351	1·0

When comparing yarns in the same class, *multiply* the constant by the given count; thus 80s cotton = (1·5 × 80) worsted.

When comparing yarns in different classes, *divide* the constant by the count; thus 80s cotton = (5288 ÷ 80) deniers silk, or artificial silk.

Engineering Calculations.[1]

Circumference of Circles.—

D = diameter. C = circumference.

$C = \pi D = 3{\cdot}1416\ D.$

$D = \frac{C}{\pi} = 0{\cdot}31831\ C.$

Areas of Circles.—

D = diameter. A = area.

$A = \frac{\pi}{4} D^2 = {\cdot}7854\ D^2.$

$D = \frac{2\sqrt{A}}{\sqrt{\pi}} = 1{\cdot}1281\ \sqrt{A}.$

Surfaces of Tubes or Cylinders.—

D = diameter of tube or cylinder in inches.

L = length of tube or cylinder in inches.

A = area of surface of tube or cylinder in square feet.

$A = \frac{3{\cdot}1416\ DL}{144}.$

Capacity of Pipes per Foot of Length, or Discharging Capacity of Pumps per Foot Travel of Piston, in Imperial Gallons.

D = diameter of pipe or pump barrel in inches.

C = capacity per foot of length in Imperial gallons = $03397\ D^2$.

Capacity of a Square Vessel.—

Multiply length × width × height in feet = cubic feet.

Multiply cubic feet × 6·22786 = gallons.

Volume of a Cylinder.—

V = area of base × perpendicular height.

Weight of Water :— 0·16 cubic feet = 10 lbs.

[1] The following publications have been consulted: *D. A. Low's Pocket Book*, Longmans, Green & Co.; *Molesworth's Pocket Book*, E. & F. N. Spon, Ltd.

Pressure corresponding to given Heads of Water.—
(Water at maximum density, 39·2° F.).
H = head in feet.
P = pressure in lbs. per square inch = ·4335 H.
H = 2·307 P.
h = head in inches.
P = pressure in lbs. per square inch = ·03608 h.
Pressure per square foot = 62·4 H.

Quantity of Heat.

Unit of Heat.—A *unit of heat* is the quantity of heat required to raise a unit mass of pure water one degree in temperature, the water being at its temperature of maximum density.

The *British thermal unit of heat* (B.Th.U.) is the quantity of heat required to raise one pound weight of pure water one degree in temperature, on Fahrenheit's scale. This may be called the *pound-degree Fahrenheit unit.*

In the *kilogramme-degree unit* the kilogramme is the unit of mass, and the centigrade scale is used. This unit is called the *major calorie*, but frequently it is called simply the *calorie.*

Combustion and Fuel.

The calorific power of a fuel is the number of units of heat produced by the combustion of 1 lb. weight of this fuel.

The theoretical evaporative power of a fuel is stated in lbs. of water evaporated from and at 212° F., and is obtained by dividing the calorific power of the fuel by 966.

Calorific Power and Evaporative Power of Fuels.

	Calorific Power in B.Th.U.	Evaporative Power in lbs. of Water from and at 212° F.
Wood, air dried, with 20 % water	5,600	5·80
Peat, air dried, with 20 % water	6,500	6·73
Coal: lignite, air dried	11,000	11·39
Coal: bituminous, average	14,100	14·60
Coal: anthracite, average	15,000	15·53
Coke: from	12,000	12·42
Coke: to	13,700	14·18
Petroleum	20,000	20·70

Steam.

Saturated Steam.—Steam at a given temperature is said to be *saturated* when it is of maximum density for that temperature. Steam in contact with water is saturated steam.

Superheated Steam.—If dry saturated steam is heated when not in contact with water, its temperature is raised and its density is diminished, or its pressure is raised. The steam is then said to be superheated.

Pressure, Temperature and Volume of Saturated Steam.

Pressure in Atmospheres.	Temperature, Degrees C.	Volume in Cubic Metres, of 1 Kilo. Steam.
1·0	100·0	1·646
1·5	112·2	1·114
2·0	121·4	0·845
2·5	128·8	0·772
3·0	135·1	0·574
3·5	140·6	0·496
4·0	145·4	0·438
4·5	149·1	0·392
5·0	153·1	0·355
5·5	156·8	0·326
6·0	160·2	0·301
6·5	163·5	0·280
7·0	166·5	0·262
7·5	169·4	0·246
8·0	172·1	0·232
9·0	177·1	0·210
10·0	181·6	0·191
20·0	214·7	0·109

1 atmosphere = 14·707 lbs. per square inch absolute pressure = 29·92 inches of mercury.

Weight of Materials.

	Sp. Gr.	Weight of a Cubic Foot.	Weight of a Cubic Inch.
Distilled water, 39° F.	1	62·425	0·036
Acetic acid	1·06	66·0	0·038
Hydrochloric acid	1·2	75·0	0·043
Nitric acid	1·217	75·0	0·044
Sulphuric acid	1·84	115·0	0·066
Olive oil	0·915	57·0	0·033
Steam (at one atmosphere)	0·00061	0·038	0·000022

Weight of Pipes.

D = outside diameter of pipe in inches.
d = inside diameter of pipe in inches.
W = weight of a lineal foot of pipe in lbs.

$$W = K(D^2 - d^2).$$

K = 2·45 for cast iron.
= 2·64 for wrought iron
= 2·82 for brass.
= 3·03 for copper.
= 3·86 for lead.

Pumps.

D = diameter of pump in inches.
S = stroke of pump in inches.
$D^2.S \times 0{\cdot}7854$ = cubic inches.
$D^2.S \times 0{\cdot}002833$ = gallons.
$D^2.S \times 0{\cdot}0004545$ = cubic feet.
$D^2.S \times 0{\cdot}02833$ = lbs. fresh water.

Centrifugal Pumps.

Diameter of fan, inches .	12	15	18	21	24	30	36
Discharge, galls. per min.	1,200	1,800	2,700	3,600	4,800	7,500	10,800

Number of Teeth in Wheels.

N = number of teeth in driving wheel.
n = number of teeth in driven wheel.
R = revolutions of driving wheel.
r = revolutions of driven wheel.

$$n = \frac{NR}{r}. \qquad r = \frac{NR}{n}.$$

Speed of Belt and Rope Pulleys.

D and d = diameter of driving and driven pulleys respectively.

R and r = revolutions per minute of driving and driven pulleys respectively.

V = speed of belt or rope in feet per minute.

$$D = \frac{dr}{R}. \quad d = \frac{DR}{r}. \quad R = \frac{dr}{D}. \quad r = \frac{DR}{d}.$$

$$V = \frac{22}{7} \times D \text{ (feet)} \times R.$$
$$= \frac{22}{7} \times d \text{ (feet)} \times r.$$

In a train of pulleys, let D_1, D_2, etc., be the diameters of the driving pulleys; let d_1, d_2, etc., be the diameters of the driven pulleys; let R and r be the number of revolutions per minute of the first and last pulleys respectively,

$$\text{then } r = R \times \frac{D_1 \times D_2 \times D_3, \text{ etc.}}{d_1 \times d_2 \times d_3, \text{ etc.}},$$
$$\text{and } R = r \times \frac{d_1 \times d_2 \times d_3, \text{ etc.}}{D_1 \times D_2 \times D_3, \text{ etc.}}.$$

Best speed for belts, between 2,000 and 4,000 feet per minute.
Best speed for ropes, 4,800 feet per minute.

Unit of Work.

The *unit of work* generally used by engineers is the *foot-pound*, and is the work done by a force of one pound acting through a distance of one foot.

Horse Power.

A working agent is said to be of one *horse power* when it can do 33,000 foot-pounds of work in one minute, or 550 foot-pounds in one second.

Weights and Measures.[1]

Metric System.—

1 metre (m.) = 10 decimetres (dm.) = 100 centimetres (cm.) = 1,000 millimetres (mm.).

1 litre (l.) = 1,000 cubic centimetres (c.c.).

1 cubic metre (cbm.) = 1,000 litres.

1 gramme (grm.) = 10 decigrammes (dg.) = 100 centigrammes (cg.) = 1,000 milligrammes (mg.).

1 kilogramme (kg. or kilo.) = 1,000 grammes.

1,000 kilogrammes = 1 ton (t.), *i.e.*, metric ton.

50 kilogrammes = 1 centner (or nearly 1 cwt.).

10 grammes = 1 dekagramme (deka. or Dg.).

100 grammes = 1 hektogramme (hg.).

The gramme is the standard unit of weight of the metric system and is equal to the weight of 1 cubic centimetre of pure

[1] The following publications have been consulted :—The *Pocket Books* of The Bayer Co., Ltd., and of Meister, Lucius and Brüning.

water (measured whilst at its greatest density, in vacuum and for a latitude of 45 degrees, at sea level). Hence:—

1 cubic centimetre water = 1 gramme.
1 litre water = 1 kilogramme.
1 cubic meter water = 1 ton.

English Weights and Measures.—

1 yard = 3 feet: 1 foot (′) = 12 inches (″): 1 inch = 12 lines (‴).

1 yard = 91·44 centimetres.
1 foot = 30·48 centimetres.
1 inch = 2·54 centimetres.
1 metre = 1·094 yard = 3·281 feet = 39·37 inches.

1 Imperial gallon (gall.) = 4 quarts (qts.) = 8 pints (pts.) = 32 gills.

In English works, 2 noggins = 1 gill (10 fluid ozs.).
2 gills = 1 pint.

In Scotch works, 4 gills = 1 pint.
1 gill = 5 fluid ozs.

1 Imperial gallon = 4·544 litres = 4,544 cubic centimetres.
1 litre = 0·22 Imperial gallon.
1 pint = 0·568 litre.
1 litre = 1·76 pint.

Taking the weight of a cubic foot of pure water at 62° F. as 62·2786 lbs., the following results are obtained:—

1 ton of pure water at 62° F. contains 35·9674 cubic feet.
1 pound of pure water at 62° F. contains 27·7463 cubic inches.
1 ton of pure water at 62° F. contains 224 gallons.
1 cubic foot of pure water at 62° F. contains 6·22786 gallons.
1 gallon of pure water at 62° F. contains 277·463 cubic inches = 0·16 cubic feet = 10 lbs.
1 cubic inch of pure water at 62° F. weighs 0·03604 pound.

1 pound avoirdupois (lb.) = 16 ounces (ozs.) = 256 drachms (drms.).

1 pound avoirdupois = 7,000 Troy grains (grs.).
1 ton (gross ton) = 20 hundredweight (cwt.) = 2,240 lbs.
1 hundredweight = 4 quarters (28 lbs. each) = 112 lbs.
1 ton = 1,016 kilogrammes.
1 pound avoirdupois = 453·593 grammes.
1 ounce = 28·349 grammes.

1 Troy grain = 0·065 gramme.

1 kilogramme = 2·205 lbs. avoirdupois.

1 gramme = 15·434 Troy grains.

1 Imperial gallon contains 10 lbs. avoirdupois, or 70,000 grains of water (measured at 62° F., under a barometric pressure of 30 inches).

Percentage Table.

In this table the percentage of colour, etc., and the corresponding quantity in grammes per 100 kilos. and in lbs., ozs. and grains per 100 lbs. of goods is given.

	per 100 kilos.	per 100 lbs.		per 100 kilos.	per 100 lbs.		per 100 kilos.	per 100 lbs.
%	grms.	lbs. ozs. grs.	%	grms.	lbs. ozs. grs.	%	grms.	lbs. ozs. grs
0·001	1	7	0·29	290	4 280	0·66	660	10 245
0·002	2	14	0·30	300	4 350	0·67	670	10 315
0·003	3	21	0·31	310	4 420	0·68	680	10 385
0·004	4	28	0·32	320	5 53	0·69	690	11 18
0·005	5	35	0·33	330	5 123	0·70	700	11 88
0·006	6	42	0·34	340	5 193	0·71	710	11 158
0·007	7	49	0·35	350	5 263	0·72	720	11 228
0·008	8	56	0·36	360	5 333	0·73	730	11 298
0·009	9	63	0·37	370	5 403	0·74	740	11 368
0·01	10	70	0·38	380	6 35	0·75	750	12 —
0·02	20	140	0·39	390	6 105	0·76	760	12 70
0·03	30	210	0·40	400	6 175	0·77	770	12 140
0·04	40	280	0·41	410	6 245	0·78	780	12 210
0·05	50	350	0·42	420	6 315	0·79	790	12 280
0·06	60	420	0·43	430	6 385	0·80	800	12 350
0·07	70	1 53	0·44	440	7 18	0·81	810	12 420
0·08	80	1 123	0·45	450	7 88	0·82	820	13 53
0·09	90	1 193	0·46	460	7 158	0·83	830	13 123
0·10	100	1 263	0·47	470	7 228	0·84	840	13 193
0·11	110	1 333	0·48	480	7 298	0·85	850	13 263
0·12	120	1 403	0·49	490	7 368	0·86	860	13 333
0·13	130	2 35	0·50	500	8 --	0·87	870	13 403
0·14	140	2 106	0·51	510	8 70	0·88	880	14 35
0·15	150	2 176	0·52	520	8 140	0·89	890	14 105
0·16	160	2 246	0·53	530	8 210	0·90	900	14 175
0·17	170	2 316	0·54	540	8 280	0·91	910	14 245
0·18	180	2 386	0·55	550	8 350	0·92	920	14 315
0·19	190	3 18	0·56	560	8 420	0·93	930	14 385
0·20	200	3 88	0·57	570	9 53	0·94	940	15 18
0·21	210	3 158	0·58	580	9 123	0·95	950	15 88
0·22	220	3 229	0·59	590	9 193	0·96	960	15 158
0·23	230	3 299	0·60	600	9 263	0·97	970	15 228
0·24	240	3 369	0·61	610	9 333	0·98	980	15 298
0·25	250	4 —	0·62	620	9 403	0·99	990	15 368
0·26	260	4 70	0·63	630	10 35	1·00	1 kilo.	1
0·27	270	4 140	0·64	640	10 105			
0·28	280	4 210	0·65	650	10 175			

Conversion of Kilogrammes into Pounds.

Kilogrammes.	cwts.	qrs.	lbs.	ozs.	Approximate conversion into lbs.
1	0	0	2	$3\frac{1}{4}$	$2\frac{1}{5}$
2	0	0	4	$6\frac{1}{2}$	$4\frac{2}{5}$
3	0	0	6	$9\frac{3}{4}$	$6\frac{3}{5}$
4	0	0	8	13	$8\frac{7}{8}$
5	0	0	11	$0\frac{1}{4}$	11
6	0	0	13	$3\frac{1}{2}$	$13\frac{1}{5}$
7	0	0	15	7	$15\frac{1}{2}$
8	0	0	17	$10\frac{1}{4}$	$17\frac{5}{8}$
9	0	0	19	$13\frac{1}{2}$	$19\frac{7}{8}$
10	0	0	22	$0\frac{3}{4}$	$22\frac{1}{8}$
20	0	1	16	$1\frac{1}{2}$	$44\frac{1}{4}$
30	0	2	10	$2\frac{1}{2}$	$66\frac{3}{8}$
40	0	3	4	3	88
50	0	3	26	$3\frac{3}{4}$	$110\frac{1}{4}$
60	1	0	20	$4\frac{1}{2}$	132
70	1	1	14	$5\frac{1}{4}$	154
80	1	2	8	6	176
90	1	3	2	$6\frac{1}{2}$	198
100	1	3	24	7	$220\frac{1}{2}$
200	3	3	20	15	441
300	5	3	17	6	$661\frac{1}{2}$
400	7	3	13	14	882
500	9	3	10	5	$1102\frac{1}{2}$

Conversion of Pounds into Kilogrammes.

1 lb.	=	0·454	Kilo.	20 lbs.	=	9·072	Kilos.
2 lbs.	=	0·907	,,	21 ,,	=	9·526	,,
3 ,,	=	1·361	Kilos.	22 ,,	=	9·979	,,
4 ,,	=	1·814	,,	23 ,,	=	10·433	,,
5 ,,	=	2·268	,,	24 ,,	=	10·886	,,
6 ,,	=	2·722	,,	25 ,,	=	11·340	,,
7 ,,	=	3·175	,,	26 ,,	=	11·794	,,
8 ,,	=	3·629	,,	27 ,,	=	12·247	,,
9 ,,	=	4·082	,,	28 ,,	=	12·701	,,
10 ,,	=	4·536	,,	29 ,,	=	13·154	,,
11 ,,	=	4·990	,,	30 ,,	=	13·608	,,
12 ,,	=	5·443	,,	31 ,,	=	14·062	,,
13 ,,	=	5·897	,,	32 ,,	=	14·515	,,
14 ,,	=	6·350	,,	33 ,,	=	14·969	,,
15 ,,	=	6·801	,,	34 ,,	=	15·422	,,
16 ,,	=	7·258	,,	35 ,,	=	15·876	,,
17 ,,	=	7·711	,,	36 ,,	=	16·330	,,
18 ,,	=	8·165	,,	37 ,,	=	16·783	,,
19 ,,	=	8·618	,,	38 ,,	=	17·237	,,

CONVERSION OF POUNDS INTO KILOGRAMMES—*continued.*

39 lbs.	=	17·690	Kilos.	50 lbs.	=	22·680	Kilos.
40 ,,	=	18·144	,,	60 ,,	=	27·216	,,
41 ,,	=	18·598	,,	70 ,,	=	31·752	,,
42 ,,	=	19·051	,,	80 ,,	=	36·288	,,
43 ,,	=	19·505	,,	90 ,,	=	40·824	,,
44 ,,	=	19·958	,,	100 ,,	=	45·360	,,
45 ,,	=	20·412	,,	200 ,,	=	90·720	,,
46 ,,	=	20·866	,,	300 ,,	=	136·080	,,
47 ,,	=	21·319	,,	400 ,,	=	181·440	,,
48 ,,	=	21·773	,,	500 ,,	=	226·800	,,
49 ,,	=	22·226	,,				

CONVERSION OF GRAINS, OZS., LBS., QRS., CWTS., INTO KILOGRAMMES.

7·716 grains = 0·5 gramme
15·432 ,, = 1·0 ,,
154·323 ,, = 10·0 grammes
437½ grains = 1 oz. = 28·3 grammes
16 ozs. = 1 lb. = 453·59 ,,
28 lbs. = 1 qr. = 12 kilos. 712 grammes
4 qrs. = 1 cwt. = 112 lbs. = 50 kilos. 803 grammes
20 cwts. = 1 ton. = 1016·06 kilos.

1 oz.	=	437½ grs.	=	28·3502	grammes
2 ozs.	=	875 ,,	=	56·6991	,,
3 ,,	=	1312½ ,,	=	85·0486	,,
4 ,,	=	1750 ,,	=	113·3981	,,
5 ,,	=	2187½ ,,	=	141·7482	,,
6 ,,	=	2625 ,,	=	170·0972	,,
7 ,,	=	3062½ ,,	=	198·4466	,,
8 ,,	=	3500 ,,	=	226·7962	,,
9 ,,	=	3937½ ,,	=	255·1457	,,
10 ,,	=	4375 ,,	=	283·4952	,,
11 ,,	=	4812½ ,,	=	311·8448	,,
12 ,,	=	5250 ,,	=	340·1942	,,
13 ,,	=	5687½ ,,	=	368·5438	,,
14 ,,	=	6125 ,,	=	396·8933	,,
15 ,,	=	6562½ ,,	=	425·2428	,,
16 ,,	=	7000 ,,	=	453·5923	,,
1 milligramme	=	0·001	,,		
1 centigramme	=	0·01	,,		
1 decigramme	=	0·1	,,		
1 decagramme	=	10·000	,,		
1 hectogramme	=	100·000	,,		
1 kilogramme	=	1000·000	,,		

Conversion of Grammes into Ozs. and Grains.

1 grm.	=	15·43 grs.					
2 grms.	=	30·86	„				
3 „	=	46·30	„				
4 „	=	61·73	„				
5 „	=	77·16	„				
6 „	=	92·59	„				
7 „	=	108·03	„				
8 „	=	123·46	„				
9 „	=	138·89	„				
10 „	=	154·32	„				
11 „	=	169·76	„				
12 „	=	185·19	„				
13 „	=	200·62	„				
14 „	=	216·05	„				
15 „	=	231·48	„				
16 „	=	246·92	„				
17 „	=	262·35	„				
18 „	=	277·78	„				
19 „	=	293·21	„				
20 „	=	308·65	„				
21 „	=	324·08	„				
22 „	=	339·51	„				
23 „	=	354·94	„				
24 „	=	370·38	„				
25 „	=	385·81	„				
26 „	=	401·24	„				
27 „	=	416·67	„				
28 „	=	432·11	„				
28·35 grms.	=	437½ grs.	=	1 oz.			
29 grms.	=	447·53 grs.	=	1 oz.	10 grs.		
30 „	=	462·97	„	=1 „	25	„	
31 „	=	478·40	„	=1 „	41	„	
32 „	=	493·83	„	=1 „	56	„	
33 „	=	509·26	„	=1 „	72	„	
34 „	=	524·69	„	=1 „	87	„	
35 „	=	540·13	„	=1 „	102	„	
36 „	=	555·56	„	=1 „	118	„	
37 „	=	570·99	„	=1 „	133	„	
38 „	=	586·42	„	=1 „	149	„	
39 „	=	601·86	„	=1 „	164	„	
40 „	=	617·29	„	=1 „	180	„	
41 „	=	632·72	„	=1 „	195	„	
42 „	=	648·15	„	=1 „	210	„	
43 „	=	663·59	„	=1 „	226	„	
44 „	=	679·02	„	=1 „	241	„	
45 „	=	694·45	„	=1 „	257	„	
46 „	=	709·88	„	=1 „	272	„	
47 „	=	725·32	„	=1 „	288	„	
48 „	=	740·75	„	=1 „	303	„	
49 „	=	756·18	„	=1 „	319	„	
50 „	=	771·61	„	=1 „	334	„	
51 grms.	=	787·04	grs.	=1 oz.	350	grs.	
52 „	=	802·48	„	=1 „	365	„	
53 „	=	817·91	„	=1 „	380	„	
54 „	=	833·34	„	=1 „	395	„	
55 „	=	848·77	„	=1 „	411	„	
56 „	=	864·21	„	=1 „	427	„	
57 „	=	879·64	„	=2 „	005	„	
58 „	=	895·07	„	=2 „	020	„	
59 „	=	910·50	„	=2 „	036	„	
60 „	=	925·94	„	=2 „	051	„	
61 „	=	941·37	„	=2 „	066	„	
62 „	=	956·80	„	=2 „	082	„	
63 „	=	972·23	„	=2 „	097	„	
64 „	=	987·67	„	=2 „	113	„	
65 „	=	1003·10	„	=2 „	128	„	
66 „	=	1018·53	„	=2 „	144	„	
67 „	=	1033·96	„	=2 „	159	„	
68 „	=	1049·39	„	=2 „	174	„	
69 „	=	1064·83	„	=2 „	190	„	
70 „	=	1080·26	„	=2 „	205	„	
71 „	=	1095·69	„	=2 „	220	„	
72 „	=	1111·12	„	=2 „	236	„	
73 „	=	1126·56	„	=2 „	252	„	
74 „	=	1141·99	„	=2 „	267	„	
75 „	=	1157·42	„	=2 „	282	„	
76 „	=	1172·85	„	=2 „	298	„	
77 „	=	1188·29	„	=2 „	313	„	
78 „	=	1203·72	„	=2 „	329	„	
79 „	=	1219·15	„	=2 „	344	„	
80 „	=	1234·58	„	=2 „	360	„	
81 „	=	1250·02	„	=2 „	375	„	
82 „	=	1265·45	„	=2 „	390	„	
83 „	=	1280·88	„	=2 „	406	„	
84 „	=	1296·31	„	=2 „	421	„	
85 „	=	1311·74	„	=2 „	437	„	
86 „	=	1327·18	„	=3 „	015	„	
87 „	=	1342·61	„	=3 „	030	„	
88 „	=	1358·04	„	=3 „	045	„	
89 „	=	1373·47	„	=3 „	061	„	
90 „	=	1388·91	„	=3 „	076	„	
91 „	=	1404·34	„	=3 „	092	„	
92 „	=	1419·77	„	=3 „	107	„	
93 „	=	1435·20	„	=3 „	123	„	
94 „	=	1450·64	„	=3 „	138	„	
95 „	=	1466·07	„	=3 „	154	„	
96 „	=	1481·50	„	=3 „	169	„	
97 „	=	1496·93	„	=3 „	184	„	
98 „	=	1512·37	„	=3 „	200	„	
99 „	=	1527·80	„	=3 „	215	„	
100 „	=	1543·23	„	=3 „	230	„	

Conversion of Grammes per Litre into Grammes and Ounces per Gallon.

Per litre.		Per gallon.		Per gallon.				
grm. 1	=	4½ grms.	=	⅙ oz.				
grms. 2	=	9 ,,	=	⅓ ,,				
,, 3	=	13½ ,,	=	½ ,,				
,, 4	=	18 ,,	=	⅔ ,,				
,, 5	=	22½ ,,	=	⅚ ,,				
,, 6	=	27 ,,	=	1 ,,				
,, 7	=	31½ ,,	=	1⅙ ,,				
,, 8	=	36 ,,	=	1⅓ ,,				
,, 9	=	40½ ,,	=	1½ ,,				
,, 10	=	45 ,,	=	1⅔ ,,				
,, 11	=	49½ ,,	=	1⅚ ,,				
,, 12	=	54 ,,	=	2 ,,				
,, 13	=	58½ ,,	=	2⅙ ,,				
,, 14	=	63 ,,	=	2⅓ ,,				
,, 15	=	67½ ,,	=	2½ ,,				
,, 16	=	72 ,,	=	2⅔ ,,				
,, 17	=	76½ ,,	=	2⅚ ,,				
,, 18	=	81 ,,	=	3 ,,				
,, 19	=	85½ ,,	=	3⅙ ,,				
,, 20	=	90 ,,	=	3⅓ ,,				
,, 30	=	135 ,,	=	5 ,,				
,, 40	=	180 ,,	=	6⅔ ,,				
,, 50	=	225 ,,	=	8⅓ ,,				
,, 60	=	270 ,,	=	10 ,,				
,, 70	=	315 ,,	=	11⅔ ,,				
,, 80	=	360 ,,	=	13⅓ ,,				
,, 90	=	405 ,,	=	15 ,,				
,, 100	=	450 ,,	=	16⅔ ,,				
,, 200	=	900 ,,	=	33⅓ ,,	=	2 lbs.	1⅓	oz.
,, 300	=	1350 ,,	=	50 ,,	=	3 ,,	2	,,
,, 400	=	1800 ,,	=	66⅔ ,,	=	4 ,,	2⅔	,,
,, 500	=	2250 ,,	=	83⅓ ,,	=	5 ,,	3⅓	,,

Conversion of Gallons, Pints and Gills (Water) into Lbs. and Ozs.

1 gallon	=	10 lbs.	5 pints	=	6¼ lbs.
1 pint	=	1¼ ,,	6 ,,	=	7½ ,,
2 pints	=	2½ ,,	7 ,,	=	8¾ ,,
3 ,,	=	3¾ ,,	8 ,,	=	10 ,,
4 ,,	=	5 ,,			

1 pint = 2 gills = 1¼ lbs.
1 quart = 2 pints = 4 ,, = 2½ ,,
1 gallon = 4 quarts = 8 pints = 32 ,, = 10 ,,

Conversion of Litres into Gallons and Pints.

Litres.		Gallons.	Pints.	Gills.	Litres.		Gallons.	Pints.	Gills.
1	=		1	3·0	15	=	3	2	1·6
2	=		3	2·1	16	=	3	4	0·7
3	=		5	1·1	17	=	3	5	3·7
4	=		7	0·2	18	=	3	7	2·8
5	=		8	3·2	19	=	4	1	1·8
6	=	1	2	2·3	20	=	4	3	0·9
7	=	1	4	1·3	21	=	4	4	3·9
8	=	1	6	0·3	22	=	4	6	3·0
9	=	1	7	3·4	23	=	5	0	2·0
10	=	2	1	2·4	24	=	5	2	1·0
11	=	2	3	1·5	25	=	5	4	0·1
12	=	2	5	0·5	50	=	11	0	0·2
13	=	2	6	3·6	75	=	16	4	0·2
14	=	3	0	2·6	100	=	22	0	0·3

Conversion of Cubic Centimetres into English Measures.

1 cubic centimetre	=	17 minims.								
2 cubic centimetres	=	34	,,							
3 ,,	=	51	,,							
4 ,,	=	68	,,	or	1	drachm	8	minims.		
5 ,,	=	85	,,	,,	1	,,	25	,,		
6 ,,	=	102	,,	,,	1	,,	42	,,		
7 ,,	=	119	,,	,,	1	,,	59	,,		
8 ,,	=	136	,,	,,	2	drachms	16	,,		
9 ,,	=	153	,,	,,	2	,,	33	,,		
10 ,,	=	170	,,	,,	2	,,	50	,,		
20 ,,	=	340	,,	,,	5	,,	40	,,		
30 ,,	=	510	,,	,,	1	ounce	0	drachm	30	minims.
40 ,,	=	680	,,	,,	1	,,	3	drachms	20	,,
50 ,,	=	850	,,	,,	1	,,	6	,,	10	,,
60 ,,	=	1020	,,	,,	2	ounces	1	,,	0	,,
70 ,,	=	1190	,,	,,	2	,,	3	,,	50	,,
80 ,,	=	1360	,,	,,	2	,,	6	,,	40	,,
90 ,,	=	1530	,,	,,	3	,,	1	,,	30	,,
100 ,,	=	1700	,,	,,	3	,,	4	,,	20	,,
1,000 ,,	=	1 litre = 34 fluid ounces nearly, or 1¾ pints.								

Conversion of Gallons into Litres.

1 Imp. gallon	=	4·544	litres	40 Imp. gallons	=	181·744	litres
2 Imp. gallons	=	9·087	,,	50 ,,	=	227·180	,,
3 ,,	=	13·631	,,	60 ,,	=	272·616	,,
4 ,,	=	18·175	,,	70 ,,	=	318·052	,,
5 ,,	=	22·718	,,	80 ,,	=	363·488	,,
6 ,,	=	27·262	,,	90 ,,	=	408·924	,,
7 ,,	=	31·805	,,	100 ,,	=	454·360	,,
8 ,,	=	36·349	,,	200 ,,	=	908·720	,,
9 ,,	=	40·892	,,	300 ,,	=	1363·080	,,
10 ,,	=	45·436	,,	400 ,,	=	1817·440	,,
20 ,,	=	90·872	,,	500 ,,	=	2271·800	,,
30 ,,	=	136·308	,,	1,000 ,,	=	4543·600	,,

INDEX

Since the Artificial Dyestuffs have been stated in alphabetical order in Parts VIII. to XIV., only such have been indexed as are specially mentioned in the text.

ABBREVIATIONS used in Parts VIII. to XIV., 182
Acacia catechu, 179
Acetate of iron, 41, 42
lime, 34
soda, 53
silk, 4, 12
Acetic acid, 23, 24
action of, on cotton 4
Acetylcellulose, 4
Acid dyestuffs, 270—273
Acids, action of, on cotton, 3, 4
Acridine dyestuffs, 189
Adrianople Red, 311
After-treatments of Immedial dyestuffs, 246, 247, 248
substantive dyestuffs with metallic salts, etc., 196, 197, 224—227
sulphur dyestuffs, 238
Aged black, 332—338
Ageing, Aniline black, 333—338
chamber for cotton yarn, 333
of logwood, 171
Ager, Mather-Platt, for steam black, 176, 337, 338
Algole Blue, CF paste and 3G paste, 300, 301
dyestuffs, 300—303
dissolving of, 302
preparation of the vat, 302
Table giving additions for dyeing with, 303
Green B paste, 300
Pink R, 302
Red R extra, 302
Scarlet G, 302
Alizarine, 178
Blue paste, 325
CB powder, 326
F paste, 326
Browns, 324
Claret, 324
R, 328
Green, 324
Indigo, 301
oil, 68
one-bath colours, 328
Orange, 109, 324
paste, 20 per cent., 327
reds dyeing on piecegoods, 318, 319
Reds, 324
Yellow, 109, 324
Alizarines, dyeing cops and cheeses with, 328
mode-shades with, 324

Alizarines—*continued.*
dyeing on chromium mordant, 325—327
without oiling, 326, 327
on combined aluminium and iron mordant, 327
on iron mordant, 327
together with wool dyestuffs, 328
Erban-Specht's method of dyeing, 323, 324
mordants for dyeing light shades with, 324
topping of, with basic dyestuffs, 325
Alkali, action of, on cotton, 5, 141—154
Blues, 272
Alkaline chrome mordant, 22
pink mordant, 26
Alpha-naphthol, 47, 216
Alpha-naphthylamine, 47, 281, 282
base, 281
claret, 281, 282
preparing bath for, 281
Alum, 25
Alumina, 27
Aluminate of soda, 26
Aluminium acetate, 26
preparation of, 324
actetates, basic, 26
hydrate, 27
hydroxide, 27
hypochlorite, 27
iron mordant, dyeing Alizarines on combined, 327
sulphate, 27
sulphate-acetates, 28
sulphates, basic, 27
sulpho-acetates, 28
Amidodiphenylamine, 217
Amidonaphtholsulphonic acid, 217
Aminoazobenzene, 283
Aminoazotoluene, 283
Ammonia, 29
alum, 25
Ammoniac, Sal, 29
Ammoniacal cochineal, 180
Ammonium chloride, 29
hydroxide, 29
sulphocyanide, 29
thiocyanate, 29
vanadate, 31
Amyloid, 3
Analysis, Capillary, 374
of dyestuffs, 373—383
textile fibres, 385, 386
water, 14—16
Aniline, 31
black, 109, 329—338
aged black, 332—338
on cotton yarn, 332—334
on loose cotton, 332
on piecegoods, 335
plant for the production of, 336, 337
Boboeuf's one-bath, 330, 331
bottom for indigo, 297
cold process of dyeing one-bath, 331
dyed black, 329—332

Aniline black—*continued.*
greening of, 329
Green's, 336
methods of dyeing one-bath, 329—332
steam black, 337, 338
topping cross-dye dyestuffs with, 260, 261
ungreenable, 329
hydrochloride, 31
salt, 31
Annatto, 180
Antichlor, 54, 63
Antimonine, 31
Antimony compounds, relative strength of, 33
lactate, 31
salt, 32
sodium fluoride, 32
trioxide, 32
Aqua fortis, 47—49
Areca catechu, 179
Arsenate of soda, 54
Artificial dyestuffs, 182—340
fibres, 9
horse-hair, 9
indigo, 285—297
jute, 12
silk, 9
bleaching of, 140
dyeing of, 9, 10, 12
Atomic weights, 387
Auramine, 192
Auronal Blues, 268
dyestuffs, dissolving of, 268
dyeing with, 268, 269
Autog`ne Black, 267
Azo-colours, fastness of insoluble, 274
insoluble, produced on the fibre, 274—283
Azoflavine, 271
Azophor Blue D, 282, 283
Orange, 283
coupling with, 222
Pink, 283
Red, 221, 277, 278
coupling with, 222
Azo Pink, 283

Bark, 177
Barlow kier, 92
Barwood, 178
Basic aluminium sulphates, 27
chromium acetate, 37
chloride, 37
cotton dyestuffs, 183—195
dyestuffs, application of the, 186—195
dissolving of, 186, 187
dyeing in one bath, 190
on tannin mordant, 187—189
on tin or tin and tannin mordant, 191, 192
on unmordanted cotton, 191
cops and cheeses with, 194
piecegoods with, 195

Basic dyestuffs—*continued.*
dyeing warps with, 194
fastness of, 186
mordanting with tannins for, 187, 188
special methods of dyeing, 189—195
topping Alizarines with, 325
substantive dyestuffs with, 227
sulphur dyestuffs with, 237, 238
Bastard saffron, 177, 178
Bayer's Turkey-red process, on piecegoods, 323
on yarn, 322
Beater, Farmer's patent, 123, 124
Beaumé degrees, 388
hydrometer, 388
Beaumont's cop dyeing machine, 358
Belt and rope pulleys, speed of, 398, 399
Bengal catechu, 179
Benzidine, 33, 283
Benzoazurine, 225
Benzo Copper Blue, 209
Fast Scarlet, after treatment of, 226
Indigo Blue, 209
Berries, Persian, 177
Besançon silk, 9
Beta-naphthol, 47, 216
colours, 274
R, 47, 275
solution for Paranitraniline-red, 275, 276
Beta-naphtholsulphonic acid, 217
Beta-naphthylamine, 283
Bichromate of potash, 50, 51
soda, 54
Bilactate of antimony, 31
Bistre, 161, 162
Bisulphite-zinc lime vat, 290
soda vat, 290
Black, Aniline, 109, 329, 338
Chrome, 172, 173
Diphenyl, 109, 338, 339
liquor, 41, 42
oil stains, 85
Prud'homme, 338
scouring of cotton cloth for, 105
Steam, 337, 338
Vanadium, 335
Blackley Blues, 193, 272
Bleaching, 70—140
artificial silk, 140
brocades, 101—103
cheeses, 78, 79
chinagrass, 139
coloured goods, 108—112
cops, 78, 79
cotton piecegoods, 85—113
sliver, 78
yarn, 79—81
tensile strength of, after, 80
dhooties, 109, 110, 111
drills, 109, 110
dyestuffs fast to, 109
fancy woven goods, 101—103

Bleaching—*continued.*
for general purposes, 101
handkerchiefs, 111, 112
hemp, 137
jute, 137—139
Busch's method, 138, 139
Cross and Bevan's method, 139
kiers, 89—101
lawns, 101—103
linen, 132—137
piecegoods, 135—137
yarn, 134, 135
liquors, preparation of, 70
loose cotton, 78
Monopole soap in, 70, 114
mulls, 111, 112
Oxfords, 109, 110
paste, 110
powder, 34, 35
apparatus for dissolving, 71
stirring arrangement for dissolving, 71
process, Erban and Pick's, 79
Geisenheimer's, 115
Hadfield and Sumner's, 115
Hertel's, 115
H. Koechlin's, 114, 115
Lunge's, 115
Mather-Thompson, 115
Meister, Lucius and Brüning's, 79
Saget's, 115
Scurati Manzoni's, 115, 116
Thies and Herzig's, 114
processes, special, 113—117
for linen, 137
Turkey-red oil in, 79, 114
warps, 79
with ozone, 117
peroxide of hydrogen, 116
potassium permanganate, 115, 116
sodium hypochlorite, 113, 114
sodium perborate, 117
sodium peroxide, 117
Bleach works, plan of small, 133
Bleu de Lille, 272
Blue, Azophor, 282, 283
developer AN, 217
Dianisidine, 282, 283
Naphthol, 282, 283
Prussian, 161
stone, 39, 40
vitriol, 39, 40
Boboeuf's one-bath Aniline black, 330, 331
Boiling kiers, 89—101
Bombay catechu, 179
Borax, 55
Bordeaux developer, 217
Bowking, 103
"Bowl" for impregnating yarn with naphthol solution, 27[illegible]
Brass, action of finely divided, on cotton, 4
Brazil wood, 178
Brilliant Croceïne, 272

Brilliant Orange G, 272
Sky Blues, 209
British thermal unit of heat, 396
Broaching stick, 346
Brocades, bleaching of, 101—103
Brome indigo FB paste, 302, 303
Bronnert silk, 10
Bronze liquor, 46
Brown on loose cotton with catechu, 181
warps with catechu, 181
yarn with catechu, 180, 181
Bucking, 103
Buff, Iron, 159, 160
Burnt lime, 35, 36

CACHOU R, 267
de Laval, 267
Cæsalpina, 178
Calcium acetate, 34
carbonate, 34
hydrate, 34
hydroxide, 34
hypochlorite, 34
oxide, 35
Calico, scouring of plain, 105
Calorie, 396
Campeachy wood, 170
Camwood, 178
Capillary analysis, 374
Capri dyestuffs, 189
Carbolic acid, v. Phenol.
Carbonate of lime, 34
Carthamus tinctoria, 177
Castor oil, 36
soap for Para-red, 53
Catechin, 179
Catechu, 178, 179
Acacia, 179
Areca, 179
Bengal, 179
Bombay, 179
Brown on loose cotton with, 181
warps with, 181
yarn with, 180, 181
dyeing with, 179—181
Pegu, 179
Catechutannic acid, 179
Caustic soda, 58, 59
Cell dryer, 130
Cellulose, 2
action of oxidising agents on, 4
nitrates, 3
solvents for, 2
xanthate, 4
Centrifugal machine, 84, 85
pumps, 398
Ceruleine paste, 324
Chalk, 34
Chamber acid, 63
Chardonnet silk, 9

Chasing in the water mangle, 127
Cheeses, bleaching of, 78, 79
dyeing of, 362
Chemic and sour cisterns, 102
Chemicals and mordants, 22—69
Chemicking and souring machine, 100
open-width washing, souring and, machine, 113, 114
Chestnut extract, 171
China Blues, 193
Chinagrass, 7
behaviour of, towards colouring matters 7
bleaching of, 139
microscopic characteristics of, 7
Chinese galls, 67
Chlorate of potash, 51
Chloride of lime, 34
soda, 59
Chlorine, action of, on jute, 8
liquid, 78
Chloroanisidine, 282
Scarlet with, 282
Chromate of lead, 157, 158
Chrome alum, 36
black, 172, 173
green, 159
orange, 158, 159
yellow, 157, 158
Chromic hydroxide, 38
Chromium acetate, 37
basic, 37
bisulphite, 37, 325, 326
chloride, 37, 325, 326
basic, 37
chromate, 37, 325, 326
fluoride, 38
hydroxide, 38
mordant, 37, 325, 326
Alizarines on, without oiling, 326, 327
dyeing Alizarine dyestuffs on, 325—327
Ciba Bordeaux, 307
dyestuffs, 306—308
developing with bleaching powder solution, 307
dissolving of, 306
Table giving additions for dyeing with, 307
Red G, 306
Scarlet G, 306
Cibanone dyestuffs, 306—308
dyeing cotton yarn with, 307, 308
Orange and Yellows, developing with bleaching powder solution, 308
Citric acid, action of, on cotton, 3
Claret, alpha-naphthylamine, 281
Clearing of Turkey-red, 313, 315, 322
Coal tar colours, v. Artificial dyestuffs.
Cochineal, 180
ammoniacal, 180
Cocoa fibre, 9
Cohnen's cop dyeing machine, 356
Collodion-wool, 3
Colorimeter, 373
Coloured goods, bleaching of, 108—112
Colouring matters, natural, 163—181

Colours, insoluble Azo, 274—283
mineral, 157—162
produced on the fibre by condensation, 340
oxidation, 329—340
Combustion and fuel, 396
Common salt, 56
Comparative dye tests, 373—378
Conditioning of cops, 362
Cop boxes, packing of, 355
drying, 362
dyeing, 353—362
machine, Beaumont's, 358
Cohnen's, 356
Crippin and Young's, 357
De Keukelaere's, 356
Graemiger's, 357
Hamer's, 356
Judenburg's, 356
Middleton's, 354—356
Mommer's, 357
Obermaier's, 354—356
Pornitz's, 358—360
Schirp's, 356
Wolff's, 358
"Zittau" (Schubert's), 358
packing, system of, 354—357
perforated skewer system of, 357—362
sand, use of, in, 357
Copper, action of finely divided, on cotton, 4
sulphate, 39
sulphide, 38
Copperas, 42
vat, 285—287
Cops and cheeses, dyeing in the indigo vat, 166
with basic dyestuffs, 194
bleaching of, 78, 79
conditioning of, 362
Correction of water, 19
Corron's hank dyeing machine, 346
Cotton, 1
action of acetic acid on, 4
citric acid on, 3
concentrated nitric acid on, 3
sulphuric acid on, 2
finely divided brass on, 4
copper on, 4
formic acid on, 4
lead peroxide on, 4
oxalic acid on, 3
oxidising agents on, 4
tartaric acid on, 3
weak mineral acids on, 3
bleaching, 70—132
Blues, 272
counts of, yarn, 393
Mercerising of, 141
microscopic characteristics of, 1
Red S, 209
Scarlet, 271
spirits, 39
unripe or dead, 2

Cotton—*continued.*
wax, 70
yarn, bleaching of, 79—81
drying of, 349—353
dyeing of, 345—349
Count systems of yarns, basis of the, 393
Counts, artificial silk yarn, 393
cotton yarn, 393
jute yarn, 393
linen yarn, 393
of yarns, constants for comparing, 394
Coupling process, cops and cheeses, 222
loose cotton, 222
piecegoods, 223, 224
warps, 223
yarn, 223
with Azophor Red, 221, 222
Nitrazol, 221, 222
Nitrosamine, 221, 222
paranitraniline, 221
Courtauld silk, 4, 11
Cow-dung, 39
Crabbing, 366, 367
machine, treble, 366, 367
Cresyl dyestuffs, 189
Croceïne, 272
Reds, 272
Scarlets, 272
Cross-dye Blacks, 259
Blues, 260
dyestuffs, dyeing, 258—261
piecegoods with, 260
warps with, 259
topping of, with Aniline black, 260, 261
Cross-wound spools, dyeing of, 362
Cudbear, 180
Cupric chloride, 39
sulphate, 39
Curcuma tinctoria, 177
Curcumin, 177
Cutch, v. Catechu.

Decroline, 62
De Keukelaere's cop dyeing machine, 356
Detection of dyestuffs on the fibre, 378—383
Developer B, 217
Developers, 196
Developing, stock solutions for, 216—218
with paranitraniline, 276, 277
soda, 217
Dhooties, bleaching of, 109, 110
Diamond Green, 192
Dianisidine, 40
Blue, 282, 283
developing bath for, 283
preparing solution for, 282
Diastafor, treating piecegoods with, 86
Diazotising and developing, continuous machine for, 220
cops and cheeses, 219
cotton yarn, 219

Diazotising and developing—*continued.*
loose cotton, 218, 219
piecegoods, 220, 221
warps, 219
Diphenyl Black, 109, 338, 339
base, 338, 339
oil DO, 338, 339
Dipping frame, 167, 168
vat, 167, 168
dyeing Indanthrene dyestuffs in the, 300
Direct cotton colours, v. Substantive cotton dyestuffs.
dyeing cotton dyestuffs, v. Substantive cotton dyestuffs.
dyestuffs, coupling of, 221—224
Grey, 194
Dissolving-ether MLB, 323
Divi-divi, 67
Double fluoride of antimony, 32
-jacketed kiers, 95
oxalate of antimony and potassium, 31
salt of antimony fluoride and ammonium sulphate, 32
tartrate of antimony and potassium, 31
Drèze's dyeing machine, 343
Drills, bleaching of, 109, 110
Drying cylinder stand, 129, 130
cylinders, Gray's spring packing for, 129, 130
machine, horizontal, 129
vertical, 127—129
of cops, 362
cotton piecegoods, 127—132
cotton yarn, 349—353
warps, 366
Dung, 39
Dye-bath, experimental, 378
beck, 369—371
Dyed black, 329—332
Dyeing apparatus, foam, 363
cop, 353—362
experimental, 373—378
foam, 363
machinery, 341—372
of cheeses, 362
cotton piecegoods, 367—372
warps, 364—366
yarn in the hank, 345—349
Dyestuffs, detection of, on the fibre, 378—383
fast to bleaching, 109
testing of, 373—386
the fastness of, 383—386
Dye tests, comparative, 373—378

Eau de Javelle, 51
Labaraque, 59, 60
Eclipse Blues, 258
dyestuffs, dissolving of, 258
dyeing with the, 257, 258
Fast colours, 258
Dark Blue, 258
Elberfeld silk, 10
Electrolyser, Mather and Platt, 74, 75

Electrolyser, Oettel, 75—77
Siemens, 73, 75
Electrolytic bleaching liquor, preparation of, 73—77
Emeraldine, 329
Engineering calculations, 395—396
English system of weights and measures, 400, 401
Eosines, 271, 272
Erythrine, 271
Erythrosine, 271
Ethyl beta-naphthylamine, 217
Experimental dye-bath, 378
dyeing, 373—378

Fast Acid Blue, 328
Violets, 328
Blue Developer AD, 217
Blues, 189
Scarlets, 271
Fastness, testing the, of dyestuffs, 383—386
Fermentation vat, 294—297
dyeing of Kryogene Black in the, 239
methods of setting the, 294—296
Ferric nitrate, 41
sulphate, 41
Ferrous acetate, 40—42
sulphate, 41, 42
Fibres, artificial, 9—12
of minor importance, 9
testing of dyestuffs and, 373—386
Flavin, 177
Flax, 5
chemical composition of, 6
grassing of, 132
Fluoride, antimony, 32
Foam dyeing, 363
apparatus, 363
Formaldehyde, 42
after-treatment of substantive dyestuffs with, 225
Formalin, 42
Formic acid, 42
action of, on cotton, 4
Formylcellulose, 4
Four-box warp dyeing machine, 364, 365
Frankfurt silk, 9
Fuel, combustion and, 396
Fuscamine, 340
Fustet, 176, 177
Fustians, scouring of, 105
Fustic, 176
old, 176
young, 176, 177

Gaban wood, 178
Gall nuts, 67
Gallipoli oil, 320
Gallo-tannic acid, 66
Galls, 67
Gambier, 178, 179
Gas singeing machine, 88, 89

Glanzstoff, 10
dyeing of, 12
Glauber's salt, 61, 62
Glucose, 42
Glue, addition of, to indigo vat, 166
Graemiger's cop dyeing machine, 357
Grape sugar, 42
Grassing, 132
Gray's patent spring packing for drying cylinders, 129, 130
Green, chrome, 159
vitriol, 42
Greening of Aniline black, 329
Green's Aniline black, 336
Grether-Bentz-Edmeston kier, 96
Grey on loose cotton with logwood, 180
yarn with logwood, 180
Gun-cotton, 3

HÆMATEIN, 170
Hæmatoxylin, 170
Hæmatoxylon can pechianum, 170
Half bleach, 106
Hamer's cop dyeing machine, 356
Handkerchiefs, bleaching of, 111, 112
Hank bleaching, 79—81
drying, 349, 353
machine, Haubold's, 349, 350
Klug's, 351—353
Montforts' continuous, 350, 351
dyeing, 345—349
machine, Corron's, 346
Klauder-Weldon, 346—348
Spencer's, 346
Thoen's method of, 346
vat for, 345, 346
washing, 81—83
Hardness of water, 13—19
estimation of the, 16—18
Haubold's hank drying machine, 349, 350
Heat, British thermal unit of, 396
quantity of, 396
unit of, 396
Helindone Brown, 309
dyestuffs, 308, 309
dissolving of, 308
Table giving quantities for reducing, 308
Yellow, 309
Hemp 7
bleaching of, 137
microscopic characteristics of, 7
High-pressure circulating kier, 94, 95
steaming cottage for Turkey-red, 317, 318
-speed starching and stentering range, 130, 132
Hoechster hydrosulphite-soda vat, 292
Holland, brown, 134
Horizontal drying machine, 129
Horse power, 399
Huile tournante, 68
Huillard's kier, 101

Hydrocellulose, 3
Hydrochloric acid, 42—44
Hydroextracting of yarn, 83—85
Hydroextractor, 84, 85
Hydrogen peroxide, 45
bleaching with, 116
developing Immedial dyestuffs with, 247
Hydrometer, Beaumé's, 388
Twaddle's, 388
Hydrometers, 388—391
Hydron Blues, 309
dyestuffs, 309
Hydrosulphite, 45, 58
ammonia vat, 292, 293
conc. B.A.S.F. powder, 58, 290
O Hoechst, 289
preparation of, 289, 304
soda vat, 290
Hoechster, 292
dyeing cops and cheeses in the, 292
loose cotton in the, 292
yarn in the, 292
sodium, 58
solution, 289
vat, 289—293
Hypochlorite of aluminium, 27
calcium, 34
potassium, 51
sodium, 59, 60
Hyposulphite of soda, 63
Hyraldite, 62
for stripping, 62

IMMEDIAL Blacks, 251, 252
dyeing of, on warps, 232, 233
Blue, 247
developer, developing Immedial dyestuffs with, 247, 248
Direct Blue, 247
dyestuffs, 246—252
after-treatment of, 246, 247
developing of, with hydrogen peroxide, 247
Immedial developer, 247, 248
sodium peroxide, 247
dissolving of, 246
dyeing cops and cheeses with, 249
loose cotton with, 248
piecegoods in continuous machines with, 249—252
with, in the jigger, 250
yarn with, 248, 249
Indogene, 247
Indone, 247
New Blue, 247, 248, 250
Indanthrene Blue, 297, 299
dyeing piecegoods with, 299
dyestuffs, dyeing with, 297—300
in the dipping vat, 300
padding with, 299—300
Yellow, 299

Indian saffron, 177
Indigo, 163—170
Alizarine, 301
Aniline black bottom for, 297
artificial, 285—297
special brands of, 295—297
blue, 163, 164
bottom for, 296
brown, 163
cold, vats, 164, 165, 285—293
dyeing cops and cheeses in the, vat, 166 (*see also* "Vat dyestuffs")
loose cotton in the, vat, 166
of mercerised cotton with, 296
goods prepared with glue with, 166
piecegoods in the, vat, 167—170
range with creeper oxidising, 169, 170
overhead oxidising, 169
Thio Indigo Red together with, 305
warps in the, vat, 167
gluten, 163
loss of, in different vats, 165
mineral impurities in, 163
MLB Vat II., 290, 294
MLB/W, fermentation vat with, 295
piece dyeing machines, continuous, 168—170
red, 163
rubbing of, dyeings, 165
solution, B.A.S.F., 20 per cent., 292
steaming of, 297
synthetic, 285—297
topping of, 238, 296, 297
with sulphur dyestuffs, 238
vat, bisulphite-zinc lime, 290
soda, 290
copperas, 166, 285—287
fermentation, 294—297
hydrosulphite, 289—293
ammonia, 292, 293
soda, 290
zinc-lime, 287, 288
vats, 164—170
copperas, Table giving different, 286
fermentation, Table giving different, 296
hydrosulphite, Table giving different, 291
zinc-lime, Table giving different, 288
warp dyeing machine, 167
white, 164
yarn dyeing, 166
Indigofera tinctoria, 163
Indigotine, 163
Indo Carbons, 248
dyeing of, in the hydrosulphite vat, 248
Indoine Blue, 193
Indol Blue, 189, 191
Indone Blue, 193
Indophenol, 297
Injector kier, 90, 91
Insoluble azo-colours, after-treatment of, with metallic salts 274, 2.5
fastness of, 274
produced on the fibre, 274—283
Irisamin, 191

Iron-buff, 159, 160
liquor, 41
mordant, dyeing of Alizarines on, 327
nitrate of, 41
pyrolignite of, 41
Isatis tinctoria, 163

JACKSON'S open bleach kier, 98—100
Janus dyestuffs, 190
Japanese galls, 67
Jefferson-Walker patent kier, 92, 93
steam consumption in, 93, 94
Jigger, Lancashire, 367, 368
padding, 235, 236
under water, 235
Walker's, 371, 372
with squeezing rollers for dyeing with sulphur dyestuffs, 233, 234
Judenburg's cop dyeing machine, 356
Jute, 8, 9
artificial, 12
bleaching, 137—139
Busch's method, 138, 139
Cross and Bevan's method, 139
chlorination of, 8
dyeing of, 9
microscopic characteristics of, 8
reactions of, 8

KATIGEN Blacks, 243
Chrome Blue, 242
Brown, 242
dyestuffs, dyeing, in machines, 244
open vessels, 243, 244
piecegoods with silk threads with, 244, 245
with worsted borders with, 245
with, 242—245
oxidising of, 243
Indigo, 242, 243
Intensifier, 243
Navy Blue, 243
Kermes, 180
Khaki, 160, 161
Kier, Barlow, 92
Gebauer-Theis, 100
Grether-Bentz-Edmeston, 96
high pressure circulating, 94, 95
Huillard's, 101
injector, 90, 91
Jackson's open bleach, 98—100
Jefferson-Walker Patent, 92, 93
steam consumption in, 93, 94
Mather, 95, 96
Mather, method of working with, 112, 113
Mather's, Sir William, 100
open top circulating, 89, 90
Pendlebury, 91, 92
Pendlebury-Barlow, 92
Spenlé patent continuous open width, 96, 97
Tagliani-Rigamonti, 96

Kier—*continued.*
Thies-Herzig, 94, 95
vertical, with injector, 90, 91
Walsh, 94, 95
Kiers, 89—101
double-jacketed, 95
open width, 96—101
Klauder-Weldon hank dyeing machine, 346—348
machine for loose cotton dyeing, 341, 342
Klug's drying machine, for yarn, cops, or loose cotton, 351—353
Koechlin's alkaline chrome mordant, 24, 25
Kryogene Black, 239
dyeing, in the fermentation vat, 239
Blues, 239
Brown, 239
dyestuffs, dyeing with the, 238, 239

LAC-DYE, 180
Lactate, antimony, 31
Lancashire jigger, 367, 368
Lawns, bleaching of, 101—103
Lead acetate, 45, 46
basic, 45
chromate of, 157
nitrate, 45
peroxide, action of, on cotton, 4
Lehner silk, 9
Lemon Yellow, 158
Leucole Brown B paste, 301
Dark Green B paste, 300, 301
Licella, 12
Lima wood, 178
Lime, 35, 36
boil, 93, 103, 107
bowk, 103
Linen, 5
behaviour of, towards colouring matters, 6
bleaching of, 132—137
piecegoods, 135—137
yarn, 134, 135
microscopic characteristics of, 6
rubbing boards for, 136
special processes of bleaching, 137
yarn, bleaching of, 134, 135
counts of, 393
reeling of, 134
Litharge, 45
Logwood, 170—176
aged, 171
ageing of, 171
black, methods of dyeing, 172—176
blues dyed with, 171
dyeing of, black on indigo, 173
loose cotton, 174
piecegoods, 175, 176
warps, 174, 175
yarn, 174
extract, 171
extracting the colouring matter from, 171
grey on loose cotton with, 180

Logwood—*continued.*
grey on yarn with, 180
maturing or ageing of, 171
violets dyed with, 171
Loose cotton, bleaching of, 78
dyeing, 341—345
machine, Dréze's, 343
Haubold's, 345
Jagenburg's, 341
Klauder-Weldon, 341, 342
Obermaier's, 343, 344
Rhodes', 342, 343
Schmidt's, 343
Schmitt's, 345
Ludigol, 45
Luteolin, 177

MACHINERY, dyeing, 341—372
Madder, 178
bleach, 103, 104
Magnesium chloride, tendering produced by, 85
Manganese bronze, 161, 162
sulphate, 46
Manganous chloride, 46
Manila hemp, 9
Market bleach, 106—108
Marseilles soap, 52
Materials, weight of, 397
Mather kier, 95, 96
method of working with, 112, 113
Mather-Platt ager for steam black, 337, 338
cop dyeing machine, 360—362
electrolyser, 74, 75
stenter clip, 131, 132
Measures, weights and, 399—406
Mercerisation, photo-micrograph of bleached sateen before and after, under tension, 147
Mercerised cotton, finishing of, 154
photo-micrograph of, 5
reactions for the characterisation of, 154—156
piecegoods, dyeing with substantive dyestuffs, 215
yarn, dyeing, with substantive dyestuffs, 212
Mercerising, 141—154
automatic hank, machine, 148, 149
hank, machines, 148—150
of cotton piecegoods, 150—153
yarn in the hank, 147—150
warps, 150
practice of, 147—154
range, 152, 153
Metanil Yellow, 271, 272
Metanitraniline, 282
orange with, 282
Meta-phenylenediamine, 217
Meta-toluylenediamine, 47, 216
Meteor, 9
Methyl Blue for cotton, 193, 272
Cotton Blue, 193
Soluble Blue, 193
Methylene Blue, 192, 193

Metric system of weights and measures, 399, 400
Middleton's cop dyeing machine, 354—356
Milk of lime, 36
Mineral colours, 157—162
Mode-shades, dyeing of, with Alizarines, 324
Moleskins, scouring of, 105
Mommer's cop dyeing machine, 357
Monopole-brilliant-oil, 304
oil, 53
soap, 52, 79, 114
Montforts' continuous hank drying machine, 350, 351
Mordant, alkaline chrome, 24, 25
Pink, 26
dyestuffs, (Alizarines), 310—328
application of the, 311—328
Yellow, 324
Mordants and chemicals, 23—69
for dyeing light shades with Alizarines, 324
tannin, 64—67
Moric acid, 176
Morintannic acid, 176
Mulls, bleaching of, 109—110
Muriatic acid, 42—44
Myrabolans, 67

NANKIN yellow, 160
Naphthol, Alpha and Beta, 47, 216, 275, 279, 281
Beta, colours, 274
R, 275
Blue, 282, 283
Naphtholsulphonic acid, Beta, 217
Naphthol Yellow S. 272
Naphthylamine, Alpha, 47, 281, 282
base, Alpha, 281
Beta, 283
claret, Alpha, 281, 282
developing with alpha-naphthylamine, 281
salt S powder, 282
preparing bath for, 281
ether powder, 217
Ethyl-beta, 217
Naphtindon, 191
Natural colouring matters, 163—181
methods of dyeing greys, browns, etc., with, 180, 181
New Metamine Blue, 189
Pink, 318
Turkey-red process, 316—318
New Zealand flax, 9
Nigrosine, 189
Nitrate of iron, 41
Nitrazol C, 277, 281
coupling with, 221, 222
Nitric acid, 47, 49
action of, on cotton, 3
Nitrocellulose, 3
silk, 9
dyeing of, 9, 10
microscopic characteristics of, 9
Nitro-*p*-toluidine, 283

Nitrosamine, coupling with, 221, 222
Pink, 283
Red paste, 278, 280
Nitroso base M, 340
Blue, 340
Nitrosodimethylaniline, *p*-, 340
Nitrotoluidine, 47
Nut galls, 67

Oak galls, 67
Obermaier's cop dyeing machine, 354—356
Oettel electrolyser, 75—78
Oil, Monopole, 53
of vitriol, 63—65
brown, 63
double, 63
olive, 49
Turkey-red, 68, 69, 79, 114, 115, 311, 316, 319, 322, 326
Turkone N, 308
Old fustic, 176
Oleïn, 68, 69
Olive oil, 49
soap, 52
One-bath Alizarine colours, 328
black, 329—332
Open bleach kier, 98—100
soaper, 122—124
top circulating kier, 89, 90
width kiers, 96—101
washing, souring, and chemicking machine, 113, 114
Orange II, IV, G, X, 271, 272
chrome, 158, 159
with metanitraniline, 282
Orchil, 180
Organic colouring matters, Artificial, v. Artificial dyestuffs.
Orlean, 180
Oxalic acid, 49
action of, on cotton, 3
tendering produced by, 85
Oxamine developers, 216, 217
Oxfords, bleaching of, 109, 110
Oxidising agents, action of, on cotton, 4
Oxycellulose, 4
reactions for, 4
Oxydiamine blacks, 214
Oxygen powder, 60
Oxymuriate of tin, 63
Ozone, bleaching with, 117

Packing of cop boxes, 355
system of cop dyeing, 354—357
Padding jigger, 235, 236
machine, three-bowl, 370, 371
Painting with acid dyestuffs, 270
Paper Red, 272
yarn, 12
dyeing of, 12
Para-aminophenol, 340
Paraffin wax, stains caused by, 85, 86

Paramine, 339, 340
Brown, 339, 340
Paranitraniline, 49, 276—280
C, 276
coupling with, 221
red on piecegoods, developing with Azophor Red, Nitrazol C, Nitrosamine Red paste, Paranitraniline, 276, 278—280
" Bowl " for impregnating yarn for, 275
developing bath for, 276, 277
dyeing of, on piecegoods, 278—281
on yarn, 275—278
preparing bath for, 275, 279
yarn with beta-naphthol for, 275
Paraphenylenediamine, 339
Para-red, v. Paranitraniline red.
Paste, bleaching, 110
Pauly silk, 10
microscopic characteristics of, 10
Pendlebury kier, 91, 92
Pendlebury-Barlow kier, 92
Percarbonate of potash, 51
Percentage table, 401
Perforated skewer system of cop dyeing, 357—362
Permanent hardness of water, 14, 16, 17, 18, 20
Permanganate of potash, 52
bleaching cotton with, 115, 116
Pernambuco wood, 178
Peroxide of hydrogen, 45
bleaching with, 116
Persian berries, 177
Phenol, 50, 196, 216
Phenylenediamine, 50, 196, 217
Philochromine, 324
Phloxine, 271
Fast Pinks, 271
Phosphate of soda, 60
Piassava, 9
Piecegoods, bleaching of cotton, 85—113
crabbing of, 366, 367
drying of, 127—132
dyeing of, in the indigo vat, 167—170
with basic dyestuffs, 195
mercerising of cotton, 150—153
scouring of, 105, 106
singeing of, 86—89
stamping of, 86
steeping of, 86
stitching of, 86
washing of, 118—124
Pile fabrics, scouring of, 105, 106
Pink, 272
alkaline, mordant, 26
dyeing of medium, with Alizarine, 324
new, 318
salt, 63
Pipes, weight of, 398
Plan of Bleaching, Dyeing, Mercerising, and Finishing Works, 372
Small Bleach Works, 133
Plant for the production of aged Aniline black, 336, 337
Plate singeing, 86—88
machine, 87

Ponceau, 271, 272
Pornitz's cop dyeing machine, 358—360
warp dyeing machine, 365, 366
Potash alum, 25
Potassium antimony tartrate, 31, 32
bichromate, 50, 51
carbonate, 51
chlorate, 51
ferricyanide, 51
ferrocyanide, 51
hypochlorite, 51
percarbonate, 51, 52
permanganate, 52
bleaching with, 115, 116
Preparing and batching arrangement, 98
salt, 61
Primuline, 109
after-treatment with bleaching powder, 226
Prud'homme black, 338
Prussian Blue, 161
Prussiate, 51
black, 337, 338
Pumps, 398
centrifugal, 398
Pure Blues, 193
Purification of water, chemical, 19—22
mechanical, 19
Purpurine, 178
Purpurol, 304
Pyrogene Blacks, 253, 254
Blues, developing, with bleaching powder solution, 255, 256
dyeing, in the jigger, 256
padding machine, 254, 256, 257
on cops and cheeses, 256
on warps, 253, 254
piecegoods with, 254
Olive, 257
Yellow, 257
Pyrol dyestuffs, dissolving of the, 262
dyeing with the, 262
Pyroligneous acid, 23, 24
Pyrolignite of iron, 40—42
Pyronine, 189
Pyroxylin, 3

QUERCETIN, 177
Quercitrin, 177
Quercitron bark, 177
Quercus nigra, 177
tinctoria, 177
Quicklime, 35
Quinoline Yellow, 271, 272

RAIN water, 4
Ramie, v. Chinagrass.
Raw cotton dyeing, 341—345
Red liquor, 28, 29
Prussiate, 51
woods, 178

Reeling of linen yarn, 134
Reseda luteola, 177
Resin boil, 108
soap, 108
Resorcine, 52, 196, 216, 340
Blue MR, 340
dyestuffs, 270—273
treating, with Solidogen, 271
Retting of flax, 5
Rhamnus, 177
Rhea, 7
Rhodamine, 192, 271
Rhus cotinus, 176
River water, 4
Rongalite, 62
Rope pulleys, speed of belt and, 398, 399
washing machine, 119—122
Rosazine, 192
Rose Bengal, 271
Rosophenine, 209
Rubbing boards for linen, 136
Rubia tinctorium, 178

SAFFLOWER, 177, 178
Saffranine, 192
Saffron, bastard, 177, 178
Indian, 177
Saint-Denis Black, 267
Red, 209, 210
Sal ammoniac, 29
Salt, common, 56, 57
Salts of lemon, tendering produced by, 85
Sandal wood, 178
Sapan wood, 178
Sateens, bleaching of, 101—103
Saturated steam, 397
Saunders wood, 178
Scarlet with chloroanisidine, 282
Scarlets, 271, 272
Schaeffer's acid, 196, 217
Schirp's cop dyeing machine, 356
Scouring drills, 105
of cotton cloth for blacks, 105
fustians, 105
moleskins, 105
pile fabrics, 105, 106
velveteens, 105, 106
velvets, 105, 106
Scroop, producing, on mercerised cotton, 42, 67, 154
Scutcher, 125, 126
Shirtings, market bleach for, 106—108
Siemens electrolyser, 73
Silicate of soda, 60, 61
Silk, artificial, 9
Silvalin, 12
Singeing, 86—89
gas, machine, 88, 89
plate, machine, 87
Sirius, 10
Sisal, 9

Sixteen-cylinder warp drying machine, 366
Slaked lime, 34
Sliver, bleaching of cotton, 78
Smothering of sulphur dyestuffs, 235
Soap, 52
castor oil, for Para-red, 53
Marseilles, 52
Monopole, 52
olive oil, 52
resin, 108
Soaper, open, 122—124
Soda, 55, 56
ash, 55, 56
crystals, 55, 56
Sodium acetate, 53
arsenate, 54
bichromate, 54
bisulphite, 54, 55
borate, 55
carbonate, 55
chlorate, 56
chloride, 56, 57
ferricyanide, 57
ferrocyanide, 58
hydrate, 58
hydrosulphite, 58
hydroxide, 58, 59
hypochlorite, 59, 60
bleaching with, 113, 114
electrolytic plant for the preparation of, 73—77
preparation of, 59, 72—77
Tailfer's apparatus for the preparation of, 72
nitrite, 60
perborate, 60
bleaching with, 117
peroxide, 60
bleaching with, 117
developing Immedial dyestuffs with, 247
phosphate, 60
silicate, 60, 61
stannate, 61
sulphate, 61, 62
sulphide, 62
sulphoxylate-formaldehyde, 62
tetrasilicate, 60
thiosulphate, 63
tungstate, 63
Solid Green, 324, 328
Solidogen, after-treatment of substantive dyestuffs with, 225
treating resorcine dyestuffs with, 271
Soluble Blues, 189, 193, 272
glass, 60
oil, v. Turkey-red oil.
Souring, open-width, washing, and chemicking machine, 113, 114
Special Grey, 194
Specific gravity, Conversion of, into degrees Twaddle, 388
Spencer's hank dyeing machine, 346
Spenlé patent continuous open-width kier, 96, 97
Spirits of salt, 42—44
Spring water 4
Square beater washing machine, 121, 122

Squeezer, 124–126
Squeezing of yarn, 83—85
Stamping, piecegoods, 86
Stannate of soda, 61
Stannic chloride, 63
Stannous chloride, 63, 64
Starching and stentering range, high-speed, 130—132
Steam, 397
black, 337, 338
Mather-Platt ager for, 337, 338
saturated, 397
Steaming sulphur dyestuffs, 235, 237
Steiner's Turkey-red process on piecegoods, 321, 322
Stenter, 130—132
clip, Mather-Platt, 131, 132
Stitching piecegoods, 86
Stretching and shaking machine, yarn, 83, 84
Substantive colours, v. Substantive cotton dyestuffs.
cotton dyestuffs, 196—227
after-treatment of, with formaldehyde, 225
metallic salts, etc., 224—227
Solidogen, 225
coupling of, 221—224
diazotising and developing of, 215—221
dyeing in continuous open-width dyeing machines 214
loose cotton with, 210, 211
mercerised piecegoods with, 215
yarn with, 212
piecegoods with, 213—215
sliver with, 211
warps with, 212, 213
with the, 207—215
yarn with, 211, 212
methods of dyeing and after-treatment, 196, 197
topping with basic dyestuffs, 227
Sugar of lead, 45
Sulphated oil, v. Turkey-red oil.
Sulphide dyestuffs, v. Sulphur dyestuffs.
of copper, 38
Sulphur Blacks, 240
Blues, 241
Browns, 241
Catechu, 241
colours, v. Sulphur dyestuffs.
Corinth, 241
dyestuffs, 228—269
after-treatment of, 238
application of the, 230—269
arrangement for steaming of, 237
continuous dyeing machine for, 251
developing of, by steaming, 235, 237
dyeing, in the padding machine, 252
dye stick and dye vat for dyeing, 232
jiggers for dyeing with, 233—235
on cops and cheeses, 233
hanks, 231, 232
loose cotton, 231
piecegoods, 233—235
warps, 232, 233
smothering of, 235

Sulphur dyestuffs—*continued.*
steaming of, 235, 237
topping of, with Indigo, 238
basic dyestuffs, 237, 238
warp dyeing machine for, 232, 233
Indigo Blue, 241
Sulphuric acid, 63—65
action of, on cotton, 2
Sulphurol dyestuffs, dyeing with the, 257
Indigo, 257
Sumach, 66
extract, 67
Sunn hemp, 9
Superheated steam, 397

TAGLIANI-RIGAMONTI kier, 96
Tannic acid, 66
Tannin, 66
mordants, 64, 66, 67, 187, 188
Tannins, 64, 66, 67
Tartar emetic, 31, 32
Tartaric acid, 67
action of, on cotton, 3
Teeth in wheels, number of, 398
Temporary hardness of water, 13, 16, 18
Terra Japonica, 178, 179
Testing of dyestuffs and fibres, 373—386
the fastness of dyestuffs, 383—385
Tetrasilicate of sodium, 60, 61
Thermometric scales, comparison of, 391, 392
Thiele silk, 11
dyeing of, 12
microscopic characteristics of, 11
Thies-Herzig kier, 94, 95
Thio Indigo dyestuffs, 304—306
Red B paste, 304, 305
dyeing of, together with Indigo, 305
Scarlets, 305, 306
Thiocatéchine, 267
Thiogene Blacks, 265, 266
Blues, 266
dyestuffs, dyeing with, 265—266
Thion dyestuffs, dyeing with, 262
Thional Blues, 268
dyestuffs, 268
Green, 268
Thionol Blacks, 263, 264
Blues, 263
dyestuffs, dissolving of the, 263
dyeing piecegoods in the jigger with the, 264
with worsted selvedges with, 264, 265
union goods with, 265
with the, 263—265
yarn with the, 263
Thiophenol Blacks, dyeing yarn with, 255
Thiophor Black Brown, 261
Blacks, 261
dyestuffs, dyeing in the jigger with, 261
with the, 261

Thiophor Navy Blues, 261
Thioxine dyestuffs, dyeing with, 266, 267
Thoen's method of dyeing hanks, 346
Three-bowl padding machine, 371
Tin crystals, 63, 64
salt, 63, 64
spirits, 39
Titanium tanno-oxalate, 68
Titanous chloride, 68, 379
salts, 68
Tolidine, 68, 283
Toluidine, Nitro-*p*-, 283
Toluylenediamine, Meta, 216
Topping, Aniline black with Indigo, 297
substantive dyestuffs with Aniline black, 260, 261
basic dyestuffs, 227
sulphur dyestuffs with basic dyestuffs, 237, 238
Indigo, 238
Tournante oil, 68
Towels, bleaching of, 111, 112
Tramping machine, 313, 314
Traversing motion, automatic, on plate singeing machine, 87, 88
Treble crabbing machine, 366, 367
Turkey-red, 311—323
Bayer's process, on piecegoods, 323
yarn, 322
bleach, 104, 105
clearing of, 315, 322
high-pressure steaming cottage for, 317, 318
new process, 316—318
oil, 68, 311, 316, 319, 322, 326
preparation of, 68, 69
use of, in bleaching, 79, 114, 115
old process, 312—316
simplified processes, 319—321
on yarn, 319, 321
steaming of, 317
Steiner's, process, 321, 322
Turkone oil N, 308
Turmeric, 177
yellow on yarn with, 181
Tuscaline Orange base, 283
Twaddle's hydrometer, 388
Twills, bleaching of, 101—103

UNCARIA gambier, 179
Under water jigger, 235
Ungreenable Aniline black, 329
Unit of heat, 396
work, 399
Unripe (dead) cotton, 2

VACANCINE colours, 274—283
Valonia, 67
Vanadium black, 335
Vat dyestuffs, 284 309
application of the, 285—309

Vegetable fibres, 1—12
Velveteens, scouring of, 105, 106
Velvets, scouring of, 105, 106
Vertical drying machine, 127—129
kier, with injector, 90, 91
Victoria Blues, 193
Vidal Black, 267
Viscose, 4
silk, 4, 11
dyeing of, 12
microscopic characteristics of, 12

WALKER's jigger, 371, 372
Walsh kier, 94, 95
Warp drying, 366
machine, sixteen-cylinder, 366
dyeing machine, for sulphur dyestuffs, 232, 233
four-box, 364, 365
Indigo, 167
Pornitz's, 365, 366
Warps, bleaching, 79
dyeing, in the indigo vat, 167
of, 364—366
with basic dyestuffs, 194
mercerising of cotton, 150
Wash mills, 135
stocks, 81, 120, 135
wheel, 118
Washing, cotton yarn, 81
machine, Haubold's yarn, 81, 82
rope, 119, 121
square beater, 121, 122
with wooden fallers, 118, 119
machines, yarn, 81, 82, 83
of cotton piecegoods, 118—124
open-width, souring, and chemicking machine, 113, 114
Water, 13
analysis of, 14
Blues, 193
chemical purification of, 19, 22
comparison of degrees of hardness of, 18, 19
correction and purification of, 19—22
estimation of the hardness of, 16, 18
hardness of, 13, 14
mangle, 126, 127
chasing in the, 127
mechanical purification of, 19
rain, 4
river, 4
softeners and purifiers, 20—22
spring, 4
well, 4
Weight of materials, 397
pipes, 398
Weights and measures, 399—406
English system of, 400, 401
Metric system of, 399, 400
Weld, 177
White sour, 104
Willesden goods, 2

Wilson's bleaching liquor, 27
Woad, 163
Wolff's cop dyeing machine, 358
Woods, red, 178
Wool dyestuffs, dyeing of, together with Alizarines, 328
Wringing of yarn, 83—85

XYLOLIN, 12

YARN, bleaching of, 79—81
counts of, 393, 394
drying of, 349—353
dyeing in the indigo vat, 166
of, 345—349
hydroextracting of, 83—85
mercerising of cotton, in the hank, 147—150
squeezing of, 83—85
stretching and shaking machine, 83, 84
washing machines, 81, 82, 83
of, 81
wringing of, 83—85
Yarns, basis of the count systems of, 393
constants for comparing counts of, 394
Yellow, chrome, 157, 158
Nankin, 160
on yarn with turmeric, 181
Prussiate, 51
wood, 176
Young fustic, 176, 177

ZINC acetate, 69
dust, 69
lime vat, 287, 288
powder, 69
"Zittau" (Schubert's) cop dyeing machine, 358

BRADBURY, AGNEW, & CO. LD., PRINTERS, LONDON AND TONBRIDGE.

D. VAN NOSTRAND COMPANY

25 PARK PLACE

New York

SHORT-TITLE CATALOG

OF

Publications and Importations

OF

SCIENTIFIC AND ENGINEERING BOOKS

This list includes the technical publications of the following English publishers:

SCOTT, GREENWOOD & CO. CROSBY LOCKWOOD & SON
CONSTABLE & COMPANY, Ltd. TECHNICAL PUBLISHING CO.
ELECTRICIAN PRINTING & PUBLISHING CO.

for whom D. Van Nostrand Company are American agents.

AUGUST, 1912

SHORT-TITLE CATALOG

OF THE

Publications and Importations

OF

D. VAN NOSTRAND COMPANY

25 PARK PLACE, N. Y.

Prices marked with an asterisk (*) are NET.
All bindings are in cloth unless otherwise noted.

A B C Code. (See Clausen-Thue.)
A1 Code. (See Clausen-Thue.)
Abbott, A. V. The Electrical Transmission of Energy.....8vo, *$5 00
—— A Treatise on Fuel. (Science Series No. 9.).....16mo, 0 50
—— Testing Machines. (Science Series No. 74.).....16mo, 0 50
Adam, P. Practical Bookbinding. Trans. by T. E. Maw.....12mo, *2 50
Adams, H. Theory and Practice in Designing.....8vo, *2 50
Adams, H. C. Sewage of Sea Coast Towns.....8vo *2 00
Adams, J. W. Sewers and Drains for Populous Districts.....8vo, 2 50
Addyman, F. T. Practical X-Ray Work.....8vo, *4 00
Adler, A. A. Principles of Projecting-line Drawing.....8vo, *1 00
—— Theory of Engineering Drawing.....8vo, (*In Press.*)
Aikman, C. M. Manures and the Principles of Manuring.....8vo, 2 50
Aitken, W. Manual of the Telephone.....8vo, *8 00
d'Albe, E. E. F., Contemporary Chemistry.....12mo, *1 25
Alexander, J. H. Elementary Electrical Engineering.....12mo, 2 00
—— Universal Dictionary of Weights and Measures.....8vo, 3 50
"Alfrec." Wireless Telegraph Designs.....
Allan, W. Strength of Beams Under Transverse Loads. (Science Series No. 19.).....16mo, 0 50
—— Theory of Arches. (Science Series No. 11.).....16mo,
Allen, H. Modern Power Gas Producer Practice and Applications..12mo, *2 50
—— Gas and Oil Engines.....8vo, *4 50
Anderson, F. A. Boiler Feed Water.....8vo, *2 50
Anderson, Capt. G. L. Handbook for the Use of Electricians.....8vo, 3 00
Anderson, J. W. Prospector's Handbook.....12mo, 1 50
Andés, L. Vegetable Fats and Oils.....8vo, *4 00
—— Animal Fats and Oils. Trans. by C. Salter.....8vo, *4 00
—— Drying Oils, Boiled Oil, and Solid and Liquid Driers.....8vo, *5 00
—— Iron Corrosion, Anti-fouling and Anti-corrosive Paints. Trans. by C. Salter.....8vo, *4 00

Andés, L. Oil Colors, and Printers' Ink. Trans. by A. Morris and H. Robson.....8vo, *2 50
—— Treatment of Paper for Special Purposes. Trans. by C. Salter. 12mo, *2 50
Andrews, E. S. Reinforced Concrete Construction.....12mo, *1 25
Annual Reports on the Progress of Chemistry.
Vol. I. (1904).....8vo, *2 00
Vol. II. (1905).....8vo, *2 00
Vol. III. (1906).....8vo, *2 00
Vol. IV. (1907).....8vo, *2 00
Vol. V. (1908).....8vo, *2 00
Vol. VI. (1909).....8vo, *2 00
Vol. VII. (1910).....8vo, *2 00
Argand, M. Imaginary Quantities. Translated from the French by A. S. Hardy. (Science Series No. 52.).....16mo, 0 50
Armstrong, R., and Idell, F. E. Chimneys for Furnaces and Steam Boilers. (Science Series No. 1.).....16mo, 0 50
Arnold, E. Armature Windings of Direct-Current Dynamos. Trans. by F. B. DeGress.....8vo, *2 00
Ashe, S. W., and Keiley, J. D. Electric Railways. Theoretically and Practically Treated. Vol. I. Rolling Stock.....12mo, *2 50
Ashe, S. W. Electric Railways. Vol. II. Engineering Preliminaries and Direct Current Sub-Stations.....12mo, *2 50
—— Electricity: Experimentally and Practically Applied.....12mo, *2 00
Atkinson, A. A. Electrical and Magnetic Calculations.....8vo, *1 50
Atkinson, J. J. Friction of Air in Mines. (Science Series No. 14.)..16mo, 0 50
Atkinson, J. J., and Williams, Jr., E. H. Gases Met with in Coal Mines. (Science Series No. 13.).....16mo, 0 50
Atkinson, P. The Elements of Electric Lighting.....12mo, 1 50
—— The Elements of Dynamic Electricity and Magnetism.....12mo, 2 00
—— Power Transmitted by Electricity.....12mo, 2 00
Auchincloss, W. S. Link and Valve Motions Simplified.....8vo, *1 50
Ayrton, H. The Electric Arc.....8vo, *5 00

Bacon, F. W. Treatise on the Richards Steam-Engine Indicator ..12mo, 1 00
Bailes, G. M. Modern Mining Practice. Five Volumes .....8vo, each, 3 50
Bailey, R. D. The Brewers' Analyst.....8vo, *5 00
Baker, A. L. Quaternions.....8vo, *1 25
—— Thick-Lens Optics.....(*In Press.*)
Baker, Benj. Pressure of Earthwork. (Science Series No. 56.)...16mo)
Baker, I. O. Levelling. (Science Series No. 91.).....16mo, 0 50
Baker, M. N. Potable Water. (Science Series No. 61.).....16mo, 0 50
—— Sewerage and Sewage Purification. (Science Series No. 18.)..16mo, 0 50
Baker, T. T. Telegraphic Transmission of Photographs.....12mo, *1 25
Bale, G. R. Modern Iron Foundry Practice. Two Volumes. 12mo.
Vol. I. Foundry Equipment, Materials Used..... *2 50
Vol. II. Machine Moulding and Moulding Machines..... *1 50
Bale, M. P. Pumps and Pumping.....12mo, 1 50
Ball, J. W. Concrete Structures in Railways. (*In Press.*).....8vo,
Ball, R. S. Popular Guide to the Heavens.....8vo, *4 50
—— Natural Sources of Power. (Westminster Series.).....8vo, *2 00

Brown, Wm. N. Workshop Wrinkles..... 8vo, *1 00
Browne, R. E. Water Meters. (Science Series No. 81.).....16mo, 0 50
Bruce, E. M. Pure Food Tests.....12mo, *1 25
Bruhns, Dr. New Manual of Logarithms.....8vo, half morocco, 2 00
Brunner, R. Manufacture of Lubricants, Shoe Polishes and Leather Dressings. Trans. by C. Salter.....8vo, *3 00
Buel, R. H. Safety Valves. (Science Series No. 21.).....16mo, 0 50
Bulman, H. F., and Redmayne, R. S. A. Colliery Working and Management.....8vo, 6 00
Burgh, N. P. Modern Marine Engineering.....4to, half morocco, 10 00
Burstall, F. W. Energy Diagram for Gas. With Text.....8vo, 1 50
——Diagram. Sold separately..... *1 00
Burt, W. A. Key to the Solar Compass.....16mo, leather, 2 50
Burton, F. G. Engineering Estimates and Cost Accounts.....12mo, *1 50
Buskett, E. W. Fire Assaying.....12mo, *1 25
Byers, H. G., and Knight, H. G. Notes on Qualitative Analysis....8vo, *1 50

Cain, W. Brief Course in the Calculus.....12mo, *1 75
—— Elastic Arches. (Science Series No. 48.).....16mo, 0 50
—— Maximum Stresses. (Science Series No. 38.).....16mo, 0 50
—— Practical Designing Retaining of Walls. (Science Series No. 3.) 16mo, 0 50
—— Theory of Steel-concrete Arches and of Vaulted Structures. (Science Series No. 42.).....16mo, 0 50
—— Theory of Voussoir Arches. (Science Series No. 12.).....16mo, 0 50
—— Symbolic Algebra. (Science Series No. 73.).....16mo, 0 50
Campin, F. The Construction of Iron Roofs.....8vo, 2 00
Carpenter, F. D. Geographical Surveying. (Science Series No. 37.).16mo,
Carpenter, R. C., and Diederichs, H. Internal Combustion Engines.8vo, *5 00
Carter, E. T. Motive Power and Gearing for Electrical Machinery ..8vo, *5 00
Carter, H. A. Ramie (Rhea), China Grass.....12mo, *2 00
Carter, H. R. Modern Flax, Hemp, and Jute Spinning.....8vo, *3 00
Cathcart, W. L. Machine Design. Part I. Fastenings.....8vo, *3 00
Cathcart, W. L., and Chaffee, J. I. Elements of Graphic Statics.....8vo, *3 00
—— Short Course in Graphics.....12mo, 1 50
Caven, R. M., and Lander, G. D. Systematic Inorganic Chemistry.12mo, *2 00
Chalkley, A. P. Diesel Engines.....8vo, *3 00
Chambers' Mathematical Tables.....8vo, 1 75
Charnock, G. F. Workshop Practice. (Westminster Series.)....8vo (*In Press.*)
Charpentier, P. Timber.....8vo, *6 00
Chatley, H. Principles and Designs of Aeroplanes. (Science Series.) No. 126.).....16mo, 0 50
—— How to Use Water Power.....12mo, *1 00
Child, C. D. Electric Arc.....8vo, *(*In Press.*)
Child, C. T. The How and Why of Electricity.....12mo, 1 00
Christie, W. W. Boiler-waters, Scale, Corrosion, Foaming.....8vo, *3 00
—— Chimney Design and Theory.....8vo, *3 00
—— Furnace Draft. (Science Series No. 123.).....16mo, 0 50
—— Water: Its Purification for Use in the Industries..... 8vo, (*In Press.*)
Church's Laboratory Guide. Rewritten by Edward Kinch.....8vo, *2 50
Clapperton, G. Practical Papermaking.....8vo, 2 50

Clark, A. G. Motor Car Engineering.
Vol. I. Construction..... *3 00
Vol. II. Design.....(*In Press.*)
Clark, C. H. Marine Gas Engines.....12mo, *1 50
Clark, D. K. Rules, Tables and Data for Mechanical Engineers.....8vo, 5 00
—— Fuel: Its Combustion and Economy.....12mo, 1 50
—— The Mechanical Engineer's Pocketbook.....16mo, 2 00
—— Tramways: Their Construction and Working.....8vo, 5 00
Clark, J. M. New System of Laying Out Railway Turnouts.....12mo, 1 00
Clausen-Thue, W. A B C Telegraphic Code. Fourth Edition.....12mo, *5 00
Fifth Edition.....8vo, *7 00
—— The A 1 Telegraphic Code.....8vo, *7 50
Cleemann, T. M. The Railroad Engineer's Practice.....12mo, *1 50
Clerk, D., and Idell, F. E. Theory of the Gas Engine. (Science Series No. 62.).....16mo, 0 50
Clevenger, S. R. Treatise on the Method of Government Surveying. 16mo, morocco..... 2 50
Clouth, F. Rubber, Gutta-Percha, and Balata.....8vo, *5 00
Cochran, J. Treatise on Cement Specifications.....8vo, (*In Press.*)..
Coffin, J. H. C. Navigation and Nautical Astronomy.....12mo, *3 50
Colburn, Z., and Thurston, R. H. Steam Boiler Explosions. (Science Series No. 2.).....16mo, 0 50
Cole, R. S. Treatise on Photographic Optics.....12mo, 1 50
Coles-Finch, W. Water, Its Origin and Use.....8vo, *5 00
Collins, J. E. Useful Alloys and Memoranda for Goldsmiths, Jewelers. 16mo..... 0 50
Constantine, E. Marine Engineers, Their Qualifications and Duties. 8vo, *2 00
Coombs, H. A. Gear Teeth. (Science Series No. 120.).....16mo, 0 50
Cooper, W. R. Primary Batteries.....8vo, *4 00
—— "The Electrician" Primers.....8vo, *5 00
Part I..... *1 50
Part II..... *2 50
Part III..... *2 00
Copperthwaite, W. C. Tunnel Shields.....4to, *9 00
Corey, H. T. Water Supply Engineering.....8vo (*In Press.*)
Corfield, W. H. Dwelling Houses. (Science Series No. 50.).....16mo, 0 50
—— Water and Water-Supply. (Science Series No. 17.).....16mo, 0 50
Cornwall, H. B. Manual of Blow-pipe Analysis.....8vo, *2 50
Courtney, C. F. Masonry Dams.....8vo, 3 50
Cowell, W. B. Pure Air, Ozone, and Water.....12mo, *2 00
Craig, T. Motion of a Solid in a Fuel. (Science Series No. 49.)....16mo, 0 50
—— Wave and Vortex Motion. (Science Series No. 43.).....16mo, 0 50
Cramp, W. Continuous Current Machine Design.....8vo, *2 50
Crocker, F. B. Electric Lighting. Two Volumes. 8vo.
Vol. I. The Generating Plant..... 3 00
Vol. II. Distributing Systems and Lamps..... 3 00
Crocker, F. B., and Arendt, M. Electric Motors.....8vo, *2 50
Crocker, F. B., and Wheeler, S. S. The Management of Electrical Machinery.....12mo, *1 00
Cross, C. F., Bevan, E. J., and Sindall, R. W. Wood Pulp and Its Applications. (Westminster Series.).....8vo, *2 00

Crosskey, L. R. Elementary Perspective.....8vo, 1 00
Crosskey, L. R., and Thaw, J. Advanced Perspective.....8vo, 1 50
Culley, J. L. Theory of Arches. (Science Series No. 87.).....16mo, 0 50

Davenport, C. The Book. (Westminster Series.).....8vo, *2 00
Davies, D. C. Metalliferous Minerals and Mining.....8vo, 5 00
—— Earthy Minerals and Mining.....8vo, 5 00
Davies, E. H. Machinery for Metalliferous Mines.....8vo, 8 00
Davies, F. H. Electric Power and Traction.....8vo, *2 00
Dawson, P. Electric Traction on Railways.....8vo, *9 00
Day, C. The Indicator and Its Diagrams.....12mo, *2 00
Deerr, N. Sugar and the Sugar Cane.....8vo, *8 00
Deite, C. Manual of Soapmaking. Trans. by S. T. King.....4to, *5 00
De la Coux, H. The Industrial Uses of Water. Trans. by A. Morris. 8vo, *4 50
Del Mar, W. A. Electric Power Conductors.....8vo, *2 00
Denny, G. A. Deep-level Mines of the Rand.....4to, *10 00
—— Diamond Drilling for Gold..... *5 00
De Roos, J. D. C. Linkages. (Science Series No. 47.).....16mo, 0 50
Derr, W. L. Block Signal Operation .....Oblong 12mo, *1 50
—— Maintenance-of-Way Engineering..... (*In Preparation.*)
Desaint, A. Three Hundred Shades and How to Mix Them.....8vo, *10 00
De Varona, A. Sewer Gases. (Science Series No. 55.).....16mo, 0 50
Devey, R. G. Mill and Factory Wiring. (Installation Manuals Series.) 12mo, *1 00
Dibdin, W. J. Public Lighting by Gas and Electricity.....8vo, *8 00
—— Purification of Sewage and Water.....8vo, 6 50
Dichmann, Carl. Basic Open-Hearth Steel Process.....12mo, *3 50
Dieterich, K. Analysis of Resins, Balsams, and Gum Resins.....8vo, *3 00
Dinger, Lieut. H. C. Care and Operation of Naval Machinery.....12mo, *2 00
Dixon, D. B. Machinist's and Steam Engineer's Practical Calculator. 16mo, morocco, 1 25
Doble, W. A. Power Plant Construction on the Pacific Coast (*In Press.*)
Dodd, G. Dictionary of Manufactures, Mining, Machinery, and the Industrial Arts.....12mo, 1 50
Dorr, B. F. The Surveyor's Guide and Pocket Table-book. 16mo, morocco, 2 00
Down, P. B. Handy Copper Wire Table.....16mo, *1 00
Draper, C. H. Elementary Text-book of Light, Heat and Sound...12mo, 1 00
—— Heat and the Principles of Thermo-dynamics.....12mo, 1 50
Duckwall, E. W. Canning and Preserving of Food Products.....8vo, *5 00
Dumesny, P., and Noyer, J. Wood Products, Distillates, and Extracts. 8vo, *4 50
Duncan, W. G., and Penman, D. The Electrical Equipment of Collieries. 8vo, *4 00
Dunstan, A. E., and Thole, F. B. T. Textbook of Practical Chemistry. 12mo, *1 40
Duthie, A. L. Decorative Glass Processes. (Westminster Series.)..8vo, *2 00
Dwight, H. B. Transmission Line Formulas.....8vo, (*In Press.*)
Dyson, S. S. Practical Testing of Raw Materials.....8vo, *5 00
Dyson, S. S., and Clarkson, S. S. Chemical Works 8vo, *7 50

Eccles, R. G., and Duckwall, E. W. Food Preservatives.....8vo, paper 0 50
Eddy, H. T. Researches in Graphical Statics.....8vo, 1 50
—— Maximum Stresses under Concentrated Loads.....8vo, 1 50
Edgcumbe, K. Industrial Electrical Measuring Instruments.....8vo, *2 50
Eissler, M. The Metallurgy of Gold.....8vo 7 50
—— The Hydrometallurgy of Copper.....8vo, *4 50
—— The Metallurgy of Silver.....8vo, 4 00
—— The Metallurgy of Argentiferous Lead.....8vo, 5 00
—— Cyanide Process for the Extraction of Gold.....8vo, 3 00
—— A Handbook on Modern Explosives.....8vo, 5 00
Ekin, T. C. Water Pipe and Sewage Discharge Diagrams.....folio, *3 00
Eliot, C. W., and Storer, F. H. Compendious Manual of Qualitative Chemical Analysis.....12mo, *1 25
Elliot, Major G. H. European Light-house Systems.....8vo, 5 00
Ennis, Wm. D. Linseed Oil and Other Seed Oils.....8vo, *4 00
—— Applied Thermodynamics.....8vo *4 50
—— Flying Machines To-day.....12mo, *1 50
—— Vapors for Heat Engines.....12mo, *1 00
Erfurt, J. Dyeing of Paper Pulp. Trans. by J. Hubner.....8vo, *7 50
Erskine-Murray, J. A Handbook of Wireless Telegraphy.....8vo, *3 50
Evans, C. A. Macadamized Roads.....(*In Press.*)
Ewing, A. J. Magnetic Induction in Iron.....8vo, *4 00

Fairie, J. Notes on Lead Ores.....12mo, *1 00
—— Notes on Pottery Clays.....12mo, *1 50
Fairley, W., and Andre, Geo. J. Ventilation of Coal Mines. (Science Series No. 58.).....16mo, 0 50
Fairweather, W. C. Foreign and Colonial Patent Laws.....8vo, *3 00
Fanning, J. T. Hydraulic and Water-supply Engineering.....8vo, *5 00
Fauth, P. The Moon in Modern Astronomy. Trans. by J. McCabe. 8vo, *2 00
Fay, I. W. The Coal-tar Colors.....8vo, *4 00
Fernbach, R. L. Glue and Gelatine.....8vo, *3 00
—— Chemical Aspects of Silk Manufacture.....12mo, *1 00
Fischer, E. The Preparation of Organic Compounds. Trans. by R. V. Stanford.....12mo, *1 25
Fish, J. C. L. Lettering of Working Drawings.....Oblong 8vo, 1 00
Fisher, H. K. C., and Darby, W. C. Submarine Cable Testing.....8vo, *3 50
Fiske, Lieut. B. A. Electricity in Theory and Practice.....8vo, 2 50
Fleischmann, W. The Book of the Dairy. Trans. by C. M. Aikman. 8vo, 4 00
Fleming, J. A. The Alternate-current Transformer. Two Volumes. 8vo.
Vol. I. The Induction of Electric Currents..... *5 00
Vol. II. The Utilization of Induced Currents..... *5 00
—— Propagation of Electric Currents.....8vo, *3 00
—— Centenary of the Electrical Current.....8vo, *0 50
—— Electric Lamps and Electric Lighting.....8vo, *3 00
—— Electrical Laboratory Notes and Forms.....4to, *5 00
—— A Handbook for the Electrical Laboratory and Testing Room. Two Volumes.....8vo, each, *5 00
Fluery, H. The Calculus Without Limits or Infinitesimals. Trans. by C. O. Mailloux.....(*In Press.*)

Flynn, P. J. Flow of Water. (Science Series No. 84.).....16mo, 0 50
—— Hydraulic Tables. (Science Series No. 66.).....16mo, 0 50
Foley, N. British and American Customary and Metric Measures..folio, *3 00
Foster, H. A. Electrical Engineers' Pocket-book. (*Sixth Edition.*) 12mo, leather, 5 00
—— Engineering Valuation of Public Utilities and Factories.....8vo, *3 00
Foster, Gen. J. G. Submarine Blasting in Boston (Mass.) Harbor....4to, 3 50
Fowle, F. F. Overhead Transmission Line Crossings.....12mo, *1 50
—— The Solution of Alternating Current Problems.....8vo (*In Press.*)
Fox, W. G. Transition Curves. (Science Series No. 110.).....16mo, 0 50
Fox, W., and Thomas, C. W. Practical Course in Mechanical Drawing.....12mo, 1 25
Foye, J. C. Chemical Problems. (Science Series No. 69.).....16mo, 0 50
—— Handbook of Mineralogy. (Science Series No. 86.).....16mo, 0 50
Francis, J. B. Lowell Hydraulic Experiments.....4to, 15 00
Freudemacher, P. W. Electrical Mining Installations. (Installation Manuals Series.).....12mo, *1 00
Frith, J. Alternating Current Design.....8vo, *2 00
Fritsch, J. Manufacture of Chemical Manures. Trans. by D. Grant. 8vo, *4 00
Frye, A. I. Civil Engineers' Pocket-book.....12mo, leather,
Fuller, G. W. Investigations into the Purification of the Ohio River. 4to. *10 00
Furnell, J. Paints, Colors, Oils, and Varnishes.....8vo, *1 00

Gairdner, J. W. I. Earthwork.....8vo, (*In Press.*)
Gant, L. W. Elements of Electric Traction.....8vo, *2 50
Garforth, W. E. Rules for Recovering Coal Mines after Explosions and Fires.....12mo, leather, 1 50
Gaudard, J. Foundations. (Science Series No. 34.).....16mo, 0 50
Gear, H. B., and Williams, P. F. Electric Central Station Distribution Systems.....8vo, *3 00
Geerligs, H. C. P. Cane Sugar and Its Manufacture.....8vo, *5 00
Geikie, J. Structural and Field Geology.....8vo, *4 00
Gerber, N. Analysis of Milk, Condensed Milk, and Infants' Milk-Food. 8vo, 1 25
Gerhard, W. P. Sanitation, Watersupply and Sewage Disposal of Country Houses.....12mo, *2 00
—— Gas Lighting. (Science Series No. 111.).....16mo, 0 50
—— Household Wastes. (Science Series No. 97.).....16mo, 0 50
—— House Drainage. (Science Series No. 63.).....16mo, 0 50
—— Sanitary Drainage of Buildings. (Science Series No. 93.)....16mo, 0 50
Gerhardi, C. W. H. Electricity Meters.....8vo, *4 00
Geschwind, L. Manufacture of Alum and Sulphates. Trans. by C. Salter.....8vo, *5 00
Gibbs, W. E. Lighting by Acetylene.....12mo, *1 50
—— Physics of Solids and Fluids. (Carnegie Technical School's Textbooks.)..... *1 50
Gibson, A. H. Hydraulics and Its Application.....8vo, *5 00
—— Water Hammer in Hydraulic Pipe Lines.....12mo, *2 00
Gilbreth, F. B. Motion Study.....12mo, *2 00
—— Primer of Scientific Management.....12mo, *1 00

Gillmore, Gen. Q. A. Limes, Hydraulic Cements and Mortars.....8vo, 4 00
—— Roads, Streets, and Pavements.....12mo, 2 00
Golding, H. A. The Theta-Phi Diagram.....12mo, *1 25
Goldschmidt, R. Alternating Current Commutator Motor.....8vo, *3 00
Goodchild, W. Precious Stones. (Westminster Series.).....8vo, *2 00
Goodeve, T. M. Textbook on the Steam-engine.....12mo, 2 00
Gore, G. Electrolytic Separation of Metals.....8vo, *3 50
Gould, E. S. Arithmetic of the Steam-engine.....12mo, 1 00
—— Calculus. (Science Series No. 112.).....16mo, 0 50
—— High Masonry Dams. (Science Series No. 22.).....16mo, 0 50
—— Practical Hydrostatics and Hydrostatic Formulas. (Science Series No. 117.).....16mo, 0 50
Grant, J. Brewing and Distilling. (Westminster Series.) 8vo (*In Press.*)
Gratacap, L. P. A Popular Guide to Minerals.....8vo (*In Press.*)
Gray, J. Electrical Influence Machines.....12mo, 2 00
—— Marine Boiler Design.....12mo, (*In Press.*)
Greenhill, G. Dynamics of Mechanical Flight.....8vo, (*In Press.*)
Greenwood, E. Classified Guide to Technical and Commercial Books. 8vo, *3 00
Gregorius, R. Mineral Waxes. Trans. by C. Salter.....12mo, *3 00
Griffiths, A. B. A Treatise on Manures.....12mo, 3 00
—— Dental Metallurgy.....8vo, *3 50
Gross, E. Hops.....8vo, *4 50
Grossman, J. Ammonia and Its Compounds.....12mo, *1 25
Groth, L. A. Welding and Cutting Metals by Gases or Electricity....8vo, *3 00
Grover, F. Modern Gas and Oil Engines.....8vo, *2 00
Gruner, A. Power-loom Weaving.....8vo, *3 00
Güldner, Hugo. Internal Combustion Engines. Trans. by H. Diederichs. 4to, *10 00
Gunther, C. O. Integration.....12mo, *1 25
Gurden, R. L. Traverse Tables.....folio, half morocco, *7 50
Guy, A. E. Experiments on the Flexure of Beams.....8vo, *1 25

Haeder, H. Handbook on the Steam-engine. Trans. by H. H. P. Powles.....12mo, 3 00
Hainbach, R. Pottery Decoration. Trans. by C. Slater.....12mo, *3 00
Haenig, A. Emery and Emery Industry.....8vo, (*In Press.*)
Hale, W. J. Calculations of General Chemistry.....12mo, *1 00
Hall, C. H. Chemistry of Paints and Paint Vehicles.....12mo, *2 00
Hall, R. H. Governors and Governing Mechanism.....12mo, *2 00
Hall, W. S. Elements of the Differential and Integral Calculus.....8vo, *2 25
—— Descriptive Geometry.....8vo volume and a 4to atlas, *3 50
Haller, G. F., and Cunningham, E. T. The Tesla Coil.....12mo, *1 25
Halsey, F. A. Slide Valve Gears.....12mo, 1 50
—— The Use of the Slide Rule. (Science Series No. 114.).....16mo, 0 50
—— Worm and Spiral Gearing. (Science Series No. 116.).....16mo, 0 50
Hamilton, W. G. Useful Information for Railway Men.....16mo, 1 00
Hammer, W. J. Radium and Other Radio-active Substances.....8vo, *1 00
Hancock, H. Textbook of Mechanics and Hydrostatics.....8vo, 1 50
Hardy, E. Elementary Principles of Graphic Statics.....12mo, *1 50
Harrison, W. B. The Mechanics' Tool-book.....12mo, 1 50
Hart, J. W. External Plumbing Work.....8vo, *3 00

Hart, J. W. Hints to Plumbers on Joint Wiping.....8vo, *3 00
—— Principles of Hot Water Supply.....8vo, *3 00
—— Sanitary Plumbing and Drainage.....8vo, *3 00
Haskins, C. H. The Galvanometer and Its Uses.....16mo, 1 50
Hatt, J. A. H. The Colorist.....square 12mo, *1 50
Hausbrand, E. Drying by Means of Air and Steam. Trans. by A. C. Wright.....12mo, *2 00
—— Evaporating, Condensing and Cooling Apparatus. Trans. by A. C. Wright.....8vo, *5 00
Hausner, A. Manufacture of Preserved Foods and Sweetmeats. Trans. by A. Morris and H. Robson.....8vo, *3 00
Hawke, W. H. Premier Cipher Telegraphic Code.....4to, *5 00
—— 100,000 Words Supplement to the Premier Code.....4to, *5 00
Hawkesworth, J. Graphical Handbook for Reinforced Concrete Design. 4to, *2 50
Hay, A. Alternating Currents.....8vo, *2 50
—— Electrical Distributing Networks and Distributing Lines.....8vo, *3 50
—— Continuous Current Engineering.....8vo, *2 50
Heap, Major D. P. Electrical Appliances.....8vo, 2 00
Heaviside, O. Electromagnetic Theory. Two Volumes.....8vo, each, *5 00
Heck, R. C. H. The Steam Engine and Turbine.....8vo, *5 00
—— Steam-Engine and Other Steam Motors. Two Volumes.
Vol. I. Thermodynamics and the Mechanics.....8vo, *3 50
Vol. II. Form, Construction, and Working.....8vo, *5 00
—— Notes on Elementary Kinematics.....8vo, boards, *1 00
—— Graphics of Machine Forces.....8vo, boards, *1 00
Hedges, K. Modern Lightning Conductors.....8vo, 3 00
Heermann, P. Dyers' Materials. Trans. by A. C. Wright.....12mo, *2 50
Hellot, Macquer and D'Apligny. Art of Dyeing Wool, Silk and Cotton. 8vo, *2 00
Henrici, O. Skeleton Structures.....8vo, 1 50
Hering, D. W. Essentials of Physics for College Students.....8vo, *1 60
Hering-Shaw, A. Domestic Sanitation and Plumbing. Two Vols...8vo, *5 00
—— Elementary Science.....8vo, *2 00
Herrmann, G. The Graphical Statics of Mechanism. Trans. by A. P. Smith.....12mo, 2 00
Herzfeld, J. Testing of Yarns and Textile Fabrics.....8vo, *3 50
Hildebrandt, A. Airships, Past and Present.....8vo, *3 50
Hildenbrand, B. W. Cable-Making. (Science Series No. 32.).....16mo, 0 50
Hilditch, T. P. A Concise History of Chemistry.....12mo, *1 25
Hill, J. W. The Purification of Public Water Supplies. New Edition. (*In Press.*)
—— Interpretation of Water Analysis.....(*In Press.*)
Hiroi, I. Plate Girder Construction. (Science Series No. 95.).....16mo, 0 50
—— Statically-Indeterminate Stresses.....12mo, *2 00
Hirshfeld, C. F. Engineering Thermodynamics. (Science Series No. 45.) 16mo, 0 50
Hobart, H. M. Heavy Electrical Engineering.....8vo, *4 50
—— Design of Static Transformers.....12mo, *2 00
—— Electricity.....8vo, *2 00
—— Electric Trains.....8vo, *2 50

Hobart, H. M. Electric Propulsion of Ships.....8vo, *2 00
Hobart, J. F. Hard Soldering, Soft Soldering and Brazing.12mo, (*In Press.*)
Hobbs, W. R. P. The Arithmetic of Electrical Measurements.....12mo, 0 50
Hoff, J. N. Paint and Varnish Facts and Formulas.....12mo, *1 50
Hoff, Com. W. B. The Avoidance of Collisions at Sea...16mo, morocco, 0 75
Hole, W. The Distribution of Gas.....8vo, *7 50
Holley, A. L. Railway Practice.....folio, 12 00
Holmes, A. B. The Electric Light Popularly Explained ....12mo, paper, 0 50
Hopkins, N. M. Experimental Electrochemistry.....8vo, *3 00
—— Model Engines and Small Boats.....12mo, 1 25
Hopkinson, J. Shoolbred, J. N., and Day, R. E. Dynamic Electricity. (Science Series No. 71.).....16mo, 0 50
Horner, J. Engineers' Turning.....8vo, *3 50
—— Metal Turning.....12mo, 1 50
—— Toothed Gearing.....12mo, 2 25
Houghton, C. E. The Elements of Mechanics of Materials.....12mo, *2 00
Houllevigue, L. The Evolution of the Sciences.....8vo, *2 00
Howe, G. Mathematics for the Practical Man.....12mo, *1 25
Howorth, J. Repairing and Riveting Glass, China and Earthenware. 8vo, paper, *0 50
Hubbard, E. The Utilization of Wood-waste.....8vo, *2 50
Hübner, J. Bleaching and Dyeing of Vegetable and Fibrous Materials (Outlines of Industrial Chemistry).....8vo, (*In Press.*)
Hudson, O. F. Iron and Steel. (Outlines of Industrial Chemistry.) 8vo, (*In Press.*)
Humper, W. Calculation of Strains in Girders.....12mo, 2 50
Humphreys, A. C. The Business Features of Engineering Practice.8vo, *1 25
Hunter, A. Bridge Work.....8vo, (*In Press.*)
Hurst, G. H. Handbook of the Theory of Color.....8vo, *2 50
—— Dictionary of Chemicals and Raw Products 8vo, *3 00
—— Lubricating Oils, Fats and Greases.....8vo, *4 00
—— Soaps.....8vo, *5 00
—— Textile Soaps and Oils.....8vo, *2 50
Hurst, H. E., and Lattey, R. T. Text-book of Physics.....8vo, *3 00
Hutchinson, R. W., Jr. Long Distance Electric Power Transmission. 12mo, *3 00
Hutchinson, R. W., Jr., and Ihlseng, M. C. Electricity in Mining..12mo, (*In Press*)
Hutchinson, W. B. Patents and How to Make Money Out of Them. 12mo, 1 25
Hutton, W. S. Steam-boiler Construction.....8vo, 6 00
—— Practical Engineer's Handbook.....8vo, 7 00
—— The Works' Manager's Handbook.....8vo, 6 00
Hyde, E. W. Skew Arches. (Science Series No. 15.).....16mo, 0 50

Induction Coils. (Science Series No. 53.).....16mo, 0 50
Ingle, H. Manual of Agricultural Chemistry 8vo, *3 00
Innes, C. H. Problems in Machine Design.....12mo, *2 00
—— Air Compressors and Blowing Engines.....12mo, *2 00
—— Centrifugal Pumps.....12mo, *2 00
—— The Fan.....12mo, *2 00

Isherwood, B. F. Engineering Precedents for Steam Machinery.....8vo, 2 50
Ivatts, E. B. Railway Management at Stations.....8vo, *2 50

Jacob, A., and Gould, E. S. On the Designing and Construction of Storage Reservoirs. (Science Series No. 6.).....16mo, 0 50
Jamieson, A. Text Book on Steam and Steam Engines.....8vo, 3 00
—— Elementary Manual on Steam and the Steam Engine.....12mo, 1 50
Jannettaz, E. Guide to the Determination of Rocks. Trans. by G. W. Plympton.....12mo, 1 50
Jehl, F. Manufacture of Carbons.....8vo, *4 00
Jennings, A. S. Commercial Paints and Painting. (Westminster Series.) 8vo (*In Press.*)
Jennison, F. H. The Manufacture of Lake Pigments.....8vo, *3 00
Jepson, G. Cams and the Principles of their Construction.....8vo, *1 50
—— Mechanical Drawing .....8vo (*In Preparation.*)
Jockin, W. Arithmetic of the Gold and Silversmith.....12mo, *1 00
Johnson, G. L. Photographic Optics and Color Photography.....8vo, *3 00
Johnson, J. H. Arc Lamps and Accessory Apparatus. (Installation Manuals Series.).....12mo, *0 75
Johnson, T. M. Ship Wiring and Fitting. (Installation Manuals Series) 12mo, *0 75
Johnson, W. H. The Cultivation and Preparation of Para Rubber...8vo, *3 00
Johnson, W. McA. The Metallurgy of Nickel .....(*In Preparation.*)
Johnston, J. F. W., and Cameron, C. Elements of Agricultural Chemistry and Geology.....12mo, 2 60
Joly, J. Raidoactivity and Geology.....12mo, *3 00
Jones, H. C. Electrical Nature of Matter and Radioactivity.....12mo, *2 00
Jones, M. W. Testing Raw Materials Used in Paint.....12mo, *2 00
Jones, L., and Scard, F. I. Manufacture of Cane Sugar.....8vo, *5 00
Jordan, L. C. Practical Railway Spiral.....12mo, Leather, (*In Press.*)
Joynson, F. H. Designing and Construction of Machine Gearing....8vo, 2 00
Jüptner, H. F. V. Siderology: The Science of Iron.....8vo, *5 00

Kansas City Bridge.....4to, 6 00
Kapp, G. Alternate Current Machinery. (Science Series No. 96.).16mo, 0 50
—— Electric Transmission of Energy.....12mo, 3 50
Keim, A. W. Prevention of Dampness in Buildings.....8vo, *2 00
Keller, S. S. Mathematics for Engineering Students. 12mo, half leather.
Algebra and Trigonometry, with a Chapter on Vectors..... *1 75
Special Algebra Edition..... *1 00
Plane and Solid Geometry..... *1 25
Analytical Geometry and Calculus..... *2 00
Kelsey, W. R. Continuous-current Dynamos and Motors.....8vo, *2 50
Kemble, W. T., and Underhill, C. R. The Periodic Law and the Hydrogen Spectrum.....8vo, paper, *0 50
Kemp, J. F. Handbook of Rocks.....8vo, *1 50
Kendall, E. Twelve Figure Cipher Code.....4to, *12 50
Kennedy, A. B. W., and Thurston, R. H. Kinematics of Machinery. (Science Series No. 54.).....16mo, 0 50
Kennedy, A. B. W., Unwin, W. C., and Idell, F. E. Compressed Air. (Science Series No. 106.).....16mo, 0 50

Kennedy, R. Modern Engines and Power Generators. Six Volumes. 4to, 15 00
Single Volumes.....each, 3 00
—— Electrical Installations. Five Volumes.....4to, 15 00
Single Volumes.....each, 3 50
—— Flying Machines; Practice and Design.....12mo, *2 00
—— Principles of Aeroplane Construction.....8vo, *1 50
Kennelly, A. E. Electro-dynamic Machinery.....8vo, 1 50
Kent, W. Strength of Materials. (Science Series No. 41.).....16mo, 0 50
Kershaw, J. B. C. Fuel, Water and Gas Analysis.....8vo, *2 50
—— Electrometallurgy. (Westminster Series.).....8vo, *2 00
—— The Electric Furnace in Iron and Steel Production.....12mo, *1 50
Kinzbrunner, C. Alternate Current Windings.....8vo, *1 50
—— Continuous Current Armatures.....8vo, *1 50
—— Testing of Alternating Current Machines.....8vo, *2 00
Kirkaldy, W. G. David Kirkaldy's System of Mechanical Testing....4to, 10 00
Kirkbride, J. Engraving for Illustration.....8vo, *1 50
Kirkwood, J. P. Filtration of River Waters.....4to, 7 50
Klein, J. F. Design of a High-speed Steam-engine.....8vo, *5 00
—— Physical Significance of Entropy.....8vo, *1 50
Kleinhans, F. B. Boiler Construction.....8vo, 3 00
Knight, R.-Adm. A. M. Modern Seamanship.....8vo, *7 50
Half morocco..... *9 00
Knox, W. F. Logarithm Tables.....(*In Preparation.*)
Knott, C. G., and Mackay, J. S. Practical Mathematics.....8vo, 2 00
Koester, F. Steam-Electric Power Plants.....4to, *5 00
—— Hydroelectric Developments and Engineering.....4to, *5 00
Koller, T. The Utilization of Waste Products.....8vo, *3 50
—— Cosmetics.....8vo, *2 50
Kretchmar, K. Yarn and Warp Sizing.....8vo, *4 00
Krischke, A. Gas and Oil Engines.....12mo, *1 25

Lambert, T. Lead and its Compounds.....8vo, *3 50
—— Bone Products and Manures.....8vo, *3 00
Lamborn, L. L. Cottonseed Products.....8vo, *3 00
—— Modern Soaps, Candles, and Glycerin.....8vo, *7 50
Lamprecht, R. Recovery Work After Pit Fires. Trans. by C. Salter..8vo, *4 00
Lanchester, F. W. Aerial Flight. Two Volumes. 8vo.
Vol. I. Aerodynamics..... *6 00
—— Aerial Flight. Vol. II. Aerodonetics..... *6 00
Larner, E. T. Principles of Alternating Currents.....12mo, *1 25
Larrabee, C. S. Cipher and Secret Letter and Telegraphic Code....16mo, 0 60
La Rue, B. F. Swing Bridges. (Science Series No. 107.).....16mo, 0 50
Lassar-Cohn, Dr. Modern Scientific Chemistry. Trans. by M. M. Pattison Muir.....12mo, *2 00
Latimer, L. H., Field, C. J., and Howell, J. W. Incandescent Electric Lighting. (Science Series No. 57.).....16mo, 0 50
Latta, M. N. Handbook of American Gas-Engineering Practice.....8vo, *4 50
—— American Producer Gas Practice.....4to, *6 00
Leask, A. R. Breakdowns at Sea.....12mo, 2 00
—— Refrigerating Machinery.....12mo, 2 00
Lecky, S. T. S. "Wrinkles" in Practical Navigation.....8vo, *8

Le Doux, M. Ice-Making Machines. (Science Series No. 46.)....16mo, 0 50
Leeds, C. C. Mechanical Drawing for Trade Schools.....oblong 4to,
High School Edition..... *1 25
Machinery Trades Edition..... *2 00
Lefévre, L. Architectural Pottery. Trans. by H. K. Bird and W. M. Binns.....4to, *7 50
Lehner, S. Ink Manufacture. Trans. by A. Morris and H. Robson..8vo, *2 50
Lemstrom, S. Electricity in Agriculture and Horticulture.....8vo, *1 50
Le Van, W. B. Steam-Engine Indicator. (Science Series No. 78.). 16mo, 0 50
Lewes, V. B. Liquid and Gaseous Fuels. (Westminster Series.)....8vo, *2 00
Lewis, L. P. Railway Signal Engineering.....8vo, *3 50
Lieber, B. F. Lieber's Standard Telegraphic Code.....8vo, *10 00
—— Code. German Edition.....8vo, *10 00
—— —— Spanish Edition.....8vo, *10 00
—— —— French Edition.....8vo, *10 00
—— Terminal Index.....8vo, *2 50
—— Lieber's Appendix.....folio, *15 00
—— —— Handy Tables.....4to, *2 50
—— Bankers and Stockbrokers' Code and Merchants and Shippers' Blank Tables.....8vo, *15 00
—— 100,000,000 Combination Code.....8vo, *10 00
—— Engineering Code.....8vo, *12 50
Livermore, V. P., and Williams, J. How to Become a Competent Motorman.....12mo, *1 00
Livingstone, R. Design and Construction of Commutators.....8vo, *2 25
Lobben, P. Machinists' and Draftsmen's Handbook 8vo, 2 50
Locke, A. G. and C. G. Manufacture of Sulphuric Acid.....8vo, 10 00
Lockwood, T. D. Electricity, Magnetism, and Electro-telegraph 8vo, 2 50
—— Electrical Measurement and the Galvanometer.....12mo, 0 75
Lodge, O. J. Elementary Mechanics.....12mo, 1 50
—— Signalling Across Space without Wires.....8vo, *2 00
Loewenstein, L. C., and Crissey, C. P. Centrifugal Pumps..... *4 50
Lord, R. T. Decorative and Fancy Fabrics.....8vo, *3 50
Loring, A. E. A Handbook of the Electromagnetic Telegraph.....16mo, 0 50
—— Handbook. (Science Series No. 39.).....16mo, 0 50
Low, D. A. Applied Mechanics (Elementary).....16mo, 0 80
Lubschez, B J. Perspective.....(*In Press.*)
Lucke, C. E. Gas Engine Design.....8vo, *3 00
—— Power Plants: Design, Efficiency, and Power Costs. 2 vols. (*In Preparation.*)
Lunge, G. Coal-tar and Ammonia. Two Volumes.....8vo, *15 00
—— Manufacture of Sulphuric Acid and Alkali. Four Volumes.....8vo,
Vol. I. Sulphuric Acid. In two parts..... *15 00
Vol. II. Salt Cake, Hydrochloric Acid and Leblanc Soda. In two parts *15 00
Vol. III. Ammonia Soda..... *10 00
Vol. IV. Electrolytic Methods.....(*In Press.*)
—— Technical Chemists' Handbook.....12mo, leather, *3 50
—— Technical Methods of Chemical Analysis. Trans. by C. A. Keane. in collaboration with the corps of specialists.
Vol. I. In two parts.....8vo, *15 00
Vol. II. In two parts.....8vo, *18 00
Vol. III.....(*In Preparation.*)

Lupton, A., Parr, G. D. A., and Perkin, H. Electricity as Applied to Mining.....8vo, *4 50
Luquer, L. M. Minerals in Rock Sections.....8vo, *1 50

Macewen, H. A. Food Inspection.....8vo, *2 50
Mackenzie, N. F. Notes on Irrigation Works.....8vo, *2 50
Mackie, J. How to Make a Woolen Mill Pay.....8vo, *2 00
Mackrow, C. Naval Architect's and Shipbuilder's Pocket-book. 16mo, leather, 5 00
Maguire, Wm. R. Domestic Sanitary Drainage and Plumbing.....8vo, 4 00
Mallet, A. Compound Engines. Trans. by R. R. Buel. (Science Series No. 10.).....16mo,
Mansfield, A. N. Electro-magnets. (Science Series No. 64.).....16mo, 0 50
Marks, E. C. R. Construction of Cranes and Lifting Machinery....12mo, *1 50
—— Construction and Working of Pumps.....12mo, *1 50
—— Manufacture of Iron and Steel Tubes.....12mo, *2 00
—— Mechanical Engineering Materials.....12mo, *1 00
Marks, G. C. Hydraulic Power Engineering.....8vo, 3 50
—— Inventions, Patents and Designs.....12mo, *1 00
Marlow, T. G. Drying Machinery and Practice.....8vo, *5 00
Marsh, C. F. Concise Treatise on Reinforced Concrete.....8vo, *2 50
—— Reinforced Concrete Compression Member Diagram. Mounted on Cloth Boards..... *1 50
Marsh, C. F., and Dunn, W. Reinforced Concrete.....4to, *5 00
Marsh, C. F., and Dunn, W. Manual of Reinforced Concrete and Concrete Block Construction.....16mo, morocco, *2 50
Marshall, W. J., and Sankey, H. R. Gas Engines. (Westminster Series.) 8vo, *2 00
Martin. G, Triumphs and Wonders of Modern Chemistry.....8vo, *2 00
Martin, N. Properties and Design of Reinforced Concrete. (*In Press.*)
Massie, W. W., and Underhill, C. R. Wireless Telegraphy and Telephony. 12mo, *1 00
Matheson, D. Australian Saw-Miller's Log and Timber Ready Reckoner. 12mo, leather, 1 50
Mathot, R. E. Internal Combustion Engines.....8vo, *6 00
Maurice, W. Electric Blasting Apparatus and Explosives.....8vo, *3 50
—— Shot Firer's Guide.....8vo, *1 50
Maxwell, J. C. Matter and Motion. (Science Series No. 36.).....16mo, 0 50
Maxwell, W. H., and Brown, J. T. Encyclopedia of Municipal and Sanitary Engineering.....4to, *10 00
Mayer, A. M. Lecture Notes on Physics.....8vo, 2 00
McCullough, R. S. Mechanical Theory of Heat.....8vo, 3 50
McIntosh, J. G. Technology of Sugar.....8vo, *4 50
—— Industrial Alcohol.....8vo, *3 00
—— Manufacture of Varnishes and Kindred Industries. Three Volumes. 8vo.
Vol. I. Oil Crushing, Refining and Boiling..... *3 50
Vol. II. Varnish Materials and Oil Varnish Making..... *4 00
Vol. III. Spirit Varnishes and Materials..... *4 50
McKnight, J. D., and Brown, A. W. Marine Multitubular Boilers..... *1 50

McMaster, J. B. Bridge and Tunnel Centres. (Science Series No. 20.) 16mo, 0 50
McMechen, F. L. Tests for Ores, Minerals and Metals.....12mo, *1 00
McNeill, B. McNeill's Code.....8vo, *6 00
McPherson, J. A. Water-works Distribution.....8vo, 2 50
Melick, C. W. Dairy Laboratory Guide.....12mo, *1 25
Merck, E. Chemical Reagents; Their Purity and Tests.....8vo, *1 50
Merritt, Wm. H. Field Testing for Gold and Silver.....16mo, leather, 1 50
Messer, W. A. Railway Permanent Way.....8vo, (*In Press.*)
Meyer, J. G. A., and Pecker, C. G. Mechanical Drawing and Machine Design.....4to, 5 00
Michell, S. Mine Drainage.....8vo, 10 00
Mierzinski, S. Waterproofing of Fabrics. Trans. by A. Morris and H. Robson.....8vo, *2 50
Miller, E. H. Quantitative Analysis for Mining Engineers.....8vo, *1 50
Miller, G. A. Determinants. (Science Series No. 105.).....16mo,
Milroy, M. E. W. Home Lace-making.....12mo, *1 00
Minifie, W. Mechanical Drawing.....8vo, *4 00
Mitchell, C. A., and Prideaux, R. M. Fibres Used in Textile and Allied Industries.....8vo, *3 00
Modern Meteorology.....12mo, 1 50
Monckton, C. C. F. Radiotelegraphy. (Westminster Series.).....8vo, *2 00
Monteverde, R. D. Vest Pocket Glossary of English-Spanish, Spanish-English Technical Terms.....64mo, leather, *1 00
Moore, E. C. S. New Tables for the Complete Solution of Ganguillet and Kutter's Formula.....8vo, *5 00
Morecroft, J. H., and Hehre, F. W. Short Course in Electrical Testing. 8vo, *1 50
Moreing, C. A., and Neal, T. New General and Mining Telegraph Code, 8vo, *5 00
Morgan, A. P. Wireless Telegraph Apparatus for Amateurs.....12mo, *1 50
Moses, A. J. The Characters of Crystals.....8vo, *2 00
Moses, A. J., and Parsons, C. L. Elements of Mineralogy.....8vo, *2 50
Moss, S. A. Elements of Gas Engine Design. (Science Series No. 121.) 16mo, 0 50
—— The Lay-out of Corliss Valve Gears. (Science Series No. 119.) 16mo, 0 50
Mulford, A. C. Boundaries and Landmarks.....(*In Press.*)
Mullin, J. P. Modern Moulding and Pattern-making.....12mo, 2 50
Munby, A. E. Chemistry and Physics of Building Materials. (Westminster Series.).....8vo, *2 00
Murphy, J. G. Practical Mining.....16mo, 1 00
Murray, J. A. Soils and Manures. (Westminster Series.).....8vo, *2 00

Naquet, A. Legal Chemistry.....12mo, 2 00
Nasmith, J. The Student's Cotton Spinning.....8vo, 3 00
—— Recent Cotton Mill Construction.....12mo, 2 00
Neave, G. B., and Heilbron, I. M. Identification of Organic Compounds. 12mo, *1 25
Neilson, R. M. Aeroplane Patents.....8vo, *2 00
Nerz, F. Searchlights. Trans. by C. Rodgers.....8vo, *3 00
Nesbit, A. F. Electricity and Magnetism.....(*In Preparation.*)
Neuberger, H., and Noalhat, H. Technology of Petroleum. Trans. by J. G. McIntosh.....8vo, *10 00

Newall, J. W. Drawing, Sizing and Cutting Bevel-gears.....8vo, 1 50
Nicol, G. Ship Construction and Calculations.....8vo, *4 50
Nipher, F. E. Theory of Magnetic Measurements.....12mo, 1 00
Nisbet, H. Grammar of Textile Design.....8vo, *3 00
Nolan, H. The Telescope. (Science Series No. 51.).....16mo, 0 50
Noll, A. How to Wire Buildings.....12mo, 1 50
North, H. B. Laboratory Notes of Experiments and General Chemistry. (*In Press.*)
Nugent, E. Treatise on Optics.....12mo, 1 50

O'Connor, H. The Gas Engineer's Pocketbook.....12mo, leather, 3 50
—— Petrol Air Gas.....12mo, *0 75
Ohm, G. S., and Lockwood, T. D. Galvanic Circuit. Translated by William Francis. (Science Series No. 102.).....16mo, 0 50
Olsen, J. C. Text-book of Quantitative Chemical Analysis.....8vo, *4 00
Olsson, A. Motor Control, in Turret Turning and Gun Elevating. (U. S. Navy Electrical Series, No. 1.).....12mo, paper, *0 50
Oudin, M. A. Standard Polyphase Apparatus and Systems.....8vo, *3 00

Pakes, W. C. C., and Nankivell, A. T. The Science of Hygiene..8vo, *1 75
Palaz, A. Industrial Photometry. Trans. by G. W. Patterson, Jr...8vo, *4 00
Pamely, C. Colliery Manager's Handbook.....8vo, *10 00
Parr, G. D. A. Electrical Engineering Measuring Instruments.....8vo, *3 50
Parry, E. J. Chemistry of Essential Oils and Artificial Perfumes....8vo, *5 00
—— Foods and Drugs. Two Volumes.....8vo,
Vol. I. Chemical and Microscopical Analysis of Foods and Drugs. *7 50
Vol. II. Sale of Food and Drugs Act..... *3 00
Parry, E. J., and Coste, J. H. Chemistry of Pigments.....8vo, *4 50
Parry, L. A. Risk and Dangers of Various Occupations.....8vo, *3 00
Parshall, H. F., and Hobart, H. M. Armature Windings.....4to, *7 50
—— Electric Railway Engineering.....4to, *10 00
Parshall, H. F., and Parry, E. Electrical Equipment of Tramways....(*In Press.*)
Parsons, S. J. Malleable Cast Iron.....8vo, *2 50
Partington, J. R. Higher Mathematics for Chemical Students..12mo, *2 00
Passmore, A. C. Technical Terms Used in Architecture.....8vo, *3 50
Paterson, G. W. L. Wiring Calculations.....12mo, *2 00
Patterson, D. The Color Printing of Carpet Yarns.....8vo, *3 50
—— Color Matching on Textiles.....8vo, *3 00
—— The Science of Color Mixing.....8vo, *3 00
Paulding, C. P. Condensation of Steam in Covered and Bare Pipes. 8vo, *2 00
—— Transmission of Heat through Cold-storage Insulation.....12mo, *1 00
Payne, D. W. Iron Founders' Handbook.....(*In Press.*)
Peddie, R. A. Engineering and Metallurgical Books.....12mo,
Peirce, B. System of Analytic Mechanics.....4to, 10 00
Pendred, V. The Railway Locomotive. (Westminster Series.).....8vo, *2 00
Perkin, F. M. Practical Methods of Inorganic Chemistry.....12mo, *1 00
Perrigo, O. E. Change Gear Devices.....8vo, 1 00
Perrine, F. A. C. Conductors for Electrical Distribution.....8vo, *3 50
Perry, J. Applied Mechanics.....8vo, *2 50
Petit, G. White Lead and Zinc White Paints.....8vo, *1 50

Petit, R. How to Build an Aeroplane. Trans. by T. O'B. Hubbard, and J. H. Ledeboer 8vo, *1 50
Pettit, Lieut. J. S. Graphic Processes. (Science Series No. 76.) ... 16mo, 0 50
Philbrick, P. H. Beams and Girders. (Science Series No. 88.) ... 16mo,
Phillips, J. Engineering Chemistry 8vo, *4 50
—— Gold Assaying 8vo, *2 50
—— Dangerous Goods 8vo, 3 50
Phin, J. Seven Follies of Science 12mo, *1 25
Pickworth, C. N. The Indicator Handbook. Two Volumes .. 12mo, each, 1 50
—— Logarithms for Beginners ..... 12mo, boards, 0 50
—— The Slide Rule 12mo, 1 00
Plattner's Manual of Blow-pipe Analysis. Eighth Edition, revised. Trans. by H. B. Cornwall 8vo, *4 00
Plympton, G. W. The Aneroid Barometer. (Science Series No. 35.) 16mo, 0 50
—— How to become an Engineer. (Science Series No. 100.) 16mo, 0 50
—— Van Nostrand's Table Book. (Science Series No. 104.) 16mo, 0 50
Pochet, M. L. Steam Injectors. Translated from the French. (Science Series No. 29.) 16mo, 0 50
Pocket Logarithms to Four Places. (Science Series No. 65.) 16mo, 0 50
leather, 1 00
Polleyn, F. Dressings and Finishings for Textile Fabrics 8vo, *3 00
Pope, F. L. Modern Practice of the Electric Telegraph 8vo, 1 50
Popplewell, W. C. Elementary Treatise on Heat and Heat Engines .. 12mo, *3 00
—— Prevention of Smoke 8vo, *3 50
—— Strength of Materials 8vo, *1 75
Porter, J. R. Helicopter Flying Machine 12mo, *1 25
Potter, T. Concrete 8vo, *3 00
Potts, H. E. Chemistry of the Rubber Industry. (Outlines of Industrial Chemistry) 8vo, *2 00
Practical Compounding of Oils, Tallow and Grease 8vo, *3 50
Practical Iron Founding 12mo, 1 50
Pratt, K. Boiler Draught 12mo, *1 25
Pray, T., Jr. Twenty Years with the Indicator 8vo, 2 50
—— Steam Tables and Engine Constant 8vo, 2 00
—— Calorimeter Tables 8vo, 1 00
Preece, W. H. Electric Lamps ..... (*In Press.*)
Prelini, C. Earth and Rock Excavation 8vo, *3 00
—— Graphical Determination of Earth Slopes 8vo, *2 00
—— Tunneling. New Edition 8vo, *3 00
—— Dredging. A Practical Treatise 8vo, *3 00
Prescott, A. B. Organic Analysis 8vo, 5 00
Prescott, A. B., and Johnson, O. C. Qualitative Chemical Analysis ... 8vo, *3 50
Prescott, A. B., and Sullivan, E. C. First Book in Qualitative Chemistry. 12mo, *1 50
Prideaux, E. B. R. Problems in Physical Chemistry 8vo, *2 00
Pritchard, O. G. The Manufacture of Electric-light Carbons .. 8vo, paper, *0 60
Pullen, W. W. F. Application of Graphic Methods to the Design of Structures 12mo, *2 50
—— Injectors: Theory, Construction and Working 12mo, *1 50
Pulsifer, W. H. Notes for a History of Lead 8vo, 4 00
Purchase, W. R. Masonry 12mo, *3 00

Putsch, A. Gas and Coal-dust Firing.....8vo, *3 00
Pynchon, T. R. Introduction to Chemical Physics.....8vo, 3 00

Rafter G. W. Mechanics of Ventilation. (Science Series No. 33.).16mo, 0 50
—— Potable Water. (Science Series No. 103.).....16mo 50
—— Treatment of Septic Sewage. (Science Series No. 118.)....16mo 50
Rafter, G. W., and Baker, M. N. Sewage Disposal in the United States. 4to, *6 00
Raikes, H. P. Sewage Disposal Works.....8vo, *4 00
Railway Shop Up-to-Date.....4to, 2 00
Ramp, H. M. Foundry Practice.....(*In Press.*)
Randall, P. M. Quartz Operator's Handbook.....12mo, 2 00
Randau, P. Enamels and Enamelling.....8vo, *4 00
Rankine, W. J. M. Applied Mechanics.....8vo, 5 00
—— Civil Engineering.....8vo, 6 50
—— Machinery and Millwork.....8vo, 5 00
—— The Steam-engine and Other Prime Movers.....8vo, 5 00
—— Useful Rules and Tables.....8vo, 4 00
Rankine, W. J. M., and Bamber, E. F. A Mechanical Text-book....8vo, 3 50
Raphael, F. C. Localization of Faults in Electric Light and Power Mains. 8vo, *3 00
Rasch, E. Electric Arc. Trans. by K. Tornberg.....(*In Press.*)
Rathbone, R. L. B. Simple Jewellery.....8vo, *2 00
Rateau, A. Flow of Steam through Nozzles and Orifices. Trans. by H. B. Brydon.....8vo, *1 50
Rausenberger, F. The Theory of the Recoil of Guns.....8vo, *4 50
Rautenstrauch, W. Notes on the Elements of Machine Design.8vo, boards, *1 50
Rautenstrauch, W., and Williams, J. T. Machine Drafting and Empirical Design.
Part I. Machine Drafting.....8vo, *1 25
Part II. Empirical Design.....(*In Preparation.*)
Raymond, E. B. Alternating Current Engineering.....12mo, *2 50
Rayner, H. Silk Throwing and Waste Silk Spinning.....8vo, *2 50
Recipes for the Color, Paint, Varnish, Oil, Soap and Drysaltery Trades.8vo, *3 50
Recipes for Flint Glass Making.....12mo, *4 50
Redfern, J. B. Bells, Telephones (Installation Manuals Series) 16mo, (*In Press.*)
Redwood, B. Petroleum. (Science Series No. 92.).....16mo, 0 50
Reed's Engineers' Handbook.....8vo, *5 00
—— Key to the Nineteenth Edition of Reed's Engineers' Handbook..8vo, *3 00
—— Useful Hints to Sea-going Engineers.....12mo, 1 50
—— Marine Boilers.....12mo, 2 00
Reinhardt, C. W. Lettering for Draftsmen, Engineers, and Students. oblong 4to, boards, 1 00
—— The Technic of Mechanical Drafting.....oblong 4to, boards, *1 00
Reiser, F. Hardening and Tempering of Steel. Trans. by A. Morris and H. Robson.....12mo, *2 50
Reiser, N. Faults in the Manufacture of Woolen Goods. Trans. by A. Morris and H. Robson.....8vo, *2 50
—— Spinning and Weaving Calculations.....8vo, *5 00
Renwick, W. G. Marble and Marble Working.....8vo, 5 00

Reynolds, O., and Idell, F. E. Triple Expansion Engines. (Science Series No. 99.)....16mo, 0 50
Rhead, G. F. Simple Structural Woodwork....12mo, *1 00
Rice, J. M., and Johnson, W. W. A New Method of Obtaining the Differential of Functions....12mo, 0 50
Richards, W. A. and North, H. B. Manual of Cement Testing. (*In Press.*)
Richardson, J. The Modern Steam Engine....8vo, *3 50
Richardson, S. S. Magnetism and Electricity....12mo, *2 00
Rideal, S. Glue and Glue Testing....8vo, *4 00
Rings, F. Concrete in Theory and Practice....12mo, *2 50
Ripper, W. Course of Instruction in Machine Drawing....folio, *6 00
Roberts, F. C. Figure of the Earth. (Science Series No. 79.)....16mo, 0 50
Roberts, J., Jr. Laboratory Work in Electrical Engineering....8vo, *2 00
Robertson, L. S. Water-tube Boilers....8vo, 3 00
Robinson, J. B. Architectural Composition....8vo, *2 50
Robinson, S. W. Practical Treatise on the Teeth of Wheels. (Science Series No. 24.)....16mo, 0 50
—— Railroad Economics. (Science Series No. 59.)....16mo, 0 50
—— Wrought Iron Bridge Members. (Science Series No. 60.)....16mo, 0 50
Robson, J. H. Machine Drawing and Sketching....8vo, *1 50
Roebling, J A. Long and Short Span Railway Bridges....folio, 25 00
Rogers, A. A Laboratory Guide of Industrial Chemistry....12mo, *1 50
Rogers, A., and Aubert, A. B. Industrial Chemistry....8vo, *5 00
Rogers, F. Magnetism of Iron Vessels. (Science Series No. 30.)..16mo, 0 50
Rohland, P. Colloidal and Cyrstalloidal State of Matter. Trans. by W. J. Britland and H. E. Potts....12mo, *1 25
Rollins, W. Notes on X-Light....8vo, *5 00
Rollinson, C. Alphabets....Oblong, .12mo, (*In Press.*)
Rose, J. The Pattern-makers' Assistant....8vo, 2 50
—— Key to Engines and Engine-running....12mo, 2 50
Rose, T. K. The Precious Metals. (Westminster Series.)....8vo, *2 00
Rosenhain, W. Glass Manufacture. (Westminster Series.)....8vo, *2 00
Ross, W. A. Plowpipe in Chemistry and Metallurgy....12mo, *2 00
Rossiter, J. T. Steam Engines. (Westminster Series.)....8vo (*In Press.*)
—— Pumps and Pumping Machinery. (Westminster Series.)..8vo (*In Press.*)
Roth. Physical Chemistry....8vo, *2 00
Rouillion, L. The Economics of Manual Training....8vo, 2 00
Rowan, F. J. Practical Physics of the Modern Steam-boiler....8vo, 7 50
Rowan, F. J., and Idell, F. E. Boiler Incrustation and Corrosion. (Science Series No. 27.)....16mo, 0 50
Roxburgh, W. General Foundry Practice....8vo, *3 50
Ruhmer, E. Wireless Telephony. Trans. by J. Erskine-Murray....8vo, *3 50
Russell, A. Theory of Electric Cables and Networks....8vo, *3 00

Sabine, R. History and Progress of the Electric Telegraph....12mo, 1 25
Saeltzer A. Treatise on Acoustics....12mo, 1 00
Salomons, D. Electric Light Installations. 12mo.
Vol. I. The Management of Accumulators.... 2 50
Vol. II. Apparatus.... 2 25
Vol. III. Applications.... 1 50
Sanford, P. G. Nitro-explosives....8vo, *4 00

Saunders, C. H. Handbook of Practical Mechanics.....16mo, 1 00
leather, 1 25
Saunnier, C. Watchmaker's Handbook.....12mo, 3 00
Sayers, H. M. Brakes for Tram Cars.....8vo, *1 25
Scheele, C. W. Chemical Essays.....8vo, *2 00
Schellen, H. Magneto-electric and Dynamo-electric Machines.....8vo, 5 00
Scherer, R. Casein. Trans. by C. Salter.....8vo, *3 00
Schidrowitz, P. Rubber, Its Production and Industrial Uses 8vo, *5 00
Schindler, K. Iron and Steel Construction Works.
Schmall, C. N. First Course in Analytic Geometry, Plane and Solid.
12mo, half leather, *1 75
Schmall, C. N., and Shack, S. M. Elements of Plane Geometry....12mo, *1 25
Schmeer, L. Flow of Water.....8vo, *3 00
Schumann, F. A Manual of Heating and Ventilation.....12mo, leather, 1 50
Schwarz, E. H. L. Causal Geology.....8vo, *2 50
Schweizer, V., Distillation of Resins.....8vo, *3 50
Scott, W. W. Qualitative Analysis. A Laboratory Manual.....8vo, *1 50
Scribner, J. M. Engineers' and Mechanics' Companion ...16mo, leather, 1 50
Searle, A. B. Modern Brickmaking.....8vo, *5 00
Searle, G. M. "Sumners' Method." Condensed and Improved. (Science Series No. 124.).....16mo, 0 50
Seaton, A. E. Manual of Marine Engineering.....8vo, 6 00
Seaton, A. E., and Rounthwaite, H. M. Pocket-book of Marine Engineering.....16mo, leather, 3 00
Seeligmann, T., Torrilhon, G. L., and Falconnet, H. India Rubber and Gutta Percha. Trans. by J. G. McIntosh.....8vo, *5 00
Seidell, A. Solubilities of Inorganic and Organic Substances.....8vo, *3 00
Sellew, W. H. Steel Rails.....4to (*In Press.*)
Senter, G. Outlines of Physical Chemistry.....12mo, *1 75
—— Textbook of Inorganic Chemistry.....12mo, *1 75
Sever, G. F. Electric Engineering Experiments.....8vo, boards, *1 00
Sever, G. F., and Townsend, F. Laboratory and Factory Tests in Electrical, Engineering.....8vo, *2 50
Sewall, C. H. Wireless Telegraphy.....8vo, *2 00
—— Lessons in Telegraphy.....12mo, *1 00
Sewell, T. Elements of Electrical Engineering.....8vo, *3 00
—— The Construction of Dynamos.....8mo, *3 00
Sexton, A. H. Fuel and Refractory Materials..... 12mo, *2 50
—— Chemistry of the Materials of Engineering.....12mo, *2 50
—— Alloys (Non-Ferrous).....8vo, *3 00
—— The Metallurgy of Iron and Steel.....8vo, *6 50
Seymour, A. Practical Lithography.....8vo, *2 50
—— Modern Printing Inks.....8vo, *2 00
Shaw, Henry S. H. Mechanical Integrators. (Science Series No. 83.)
16mo, 0 50
Shaw, P. E. Course of Practical Magnetism and Electricity.....8vo, *1 00
Shaw, S. History of the Staffordshire Potteries.....8vo, *3 00
—— Chemistry of Compounds Used in Porcelain Manufacture.....8vo, *5 00
Shaw, W. N. Forecasting Weather.....8vo, *3 50
Sheldon, S., and Hausmann, E. Direct Current Machines.....12mo, *2 50
—— Alternating Current Machines 12mo, *2 50

Sheldon, S., and Hausmann, E. Electric Traction and Transmission Engineering.....12mo, *2 50
Sherriff, F. F. Oil Merchants' Manual.....12mo, *3 50
Shields, J. E. Notes on Engineering Construction.....12mo, 1 50
Shock, W. H. Steam Boilers.....4to, half morocco, 15 00
Shreve, S. H. Strength of Bridges and Roofs.....8vo, 3 50
Shunk, W. F. The Field Engineer.....12mo, morocco, 2 50
Simmons, W. H., and Appleton, H. A. Handbook of Soap Manufacture. 8vo, *3 00
Simmons, W. H., and Mitchell, C. A. Edible Fats and Oils.....8vo, *3 00
Simms, F. W. The Principles and Practice of Leveling.....8vo, 2 50
—— Practical Tunneling.....8vo, 7 50
Simpson, G. The Naval Constructor.....12mo, morocco, *5 00
Simpson, W. Foundations.....8vo, (*In Press.*)
Sinclair, A. Development of the Locomotive Engine...8vo, half leather, 5 00
Sinclair, A. Twentieth Century Locomotive.....8vo, half leather, *5 00
Sindall, R. W. Manufacture of Paper. (Westminster Series.).....8vo, *2 00
Sloane, T. O'C. Elementary Electrical Calculations.....12mo, *2 00
Smith, C. A. M. Handbook of Testing, MATERIALS.....8vo, *2 50
Smith, C. A. M., and Warren, A. G. New Steam Tables.....8vo,
Smith, C. F. Practical Alternating Currents and Testing.....8vo, *2 50
—— Practical Testing of Dynamos and Motors.....8vo, *2 00
Smith, F. E. Handbook of General Instruction for Mechanics....12mo, 1 50
Smith, J. C. Manufacture of Paint.....8vo, *3 00
Smith, R. H. Principles of Machine Work.....12mo, *3 00
—— Elements of Machine Work.....12mo, *2 00
Smith, W. Chemistry of Hat Manufacturing.....12mo, *3 00
Snell, A. T. Electric Motive Power.....8vo, *4 00
Snow, W. G. Pocketbook of Steam Heating and Ventilation. (*In Press.*)
Snow, W. G., and Nolan, T. Ventilation of Buildings. (Science Series No. 5.).....16mo, 0 50
Soddy, F. Radioactivity.....8vo, *3 00
Solomon, M. Electric Lamps. (Westminster Series.).....8vo, *2 00
Sothern, J. W. The Marine Steam Turbine.....8vo, *5 00
Southcombe, J. E. Paints, Oils and Varnishes. (Outlines of Industrial Chemistry.).....8vo, (*In Press.*)
Soxhlet, D. H. Dyeing and Staining Marble. Trans. by A. Morris and H. Robson.....8vo, *2 50
Spang, H. W. A Practical Treatise on Lightning Protection.....12mo, 1 00
Spangenburg, L. Fatigue of Metals. Translated by S. H. Shreve. (Science Series No. 23.).....16mo, 0 50
Specht, G. J., Hardy, A. S., McMaster, J.B., and Walling. Topographical Surveying. (Science Series No. 72.).....16mo, 0 50
Speyers, C. L. Text-book of Physical Chemistry.....8vo, *2 25
Stahl, A. W. Transmission of Power. (Science Series No. 28.)...16mo,
Stahl, A. W., and Woods, A. T. Elementary Mechanism.....12mo, *2 00
Staley, C., and Pierson, G. S. The Separate System of Sewerage....8vo, *3 00
Standage, H. C. Leatherworkers' Manual.....8vo, *3 50
—— Sealing Waxes, Wafers, and Other Adhesives.....8vo, *2 00
—— Agglutinants of all Kinds for all Purposes.....12mo, *3 50
Stansbie, J. H. Iron and Steel. (Westminster Series.).....8vo, *2 00

Steinman, D. B. Suspension Bridges and Cantilevers. (Science Series No. 127)..... 0 50
Stevens, H. P. Paper Mill Chemist.....16mo, *2 50
Stevenson, J. L. Blast-Furnace Calculations.....12mo, leather, *2 00
Stewart, A. Modern Polyphase Machinery.....12mo, *2 00
Stewart, G. Modern Steam Traps.....12mo, *1 25
Stiles, A. Tables for Field Engineers.....12mo, 1 00
Stillman, P. Steam-engine Indicator.....12mo, 1 00
Stodola, A. Steam Turbines. Trans. by L. C. Loewenstein.....8vo, *5 00
Stone, H. The Timbers of Commerce.....8vo, 3 50
Stone, Gen. R. New Roads and Road Laws.....12mo, 1 00
Stopes, M. Ancient Plants.....8vo, *2 00
—— The Study of Plant Life.....8vo, *2 00
Stumpf, Prof. Una-Flow of Steam Engine.....(*In Press.*)
Sudborough, J. J., and James, T. C. Practical Organic Chemistry..12mo, *2 00
Suffling, E. R. Treatise on the Art of Glass Painting.....8vo, *3 50
Swan, K. Patents, Designs and Trade Marks. (Westminster Series.).8vo, *2 00
Sweet, S. H. Special Report on Coal.....8vo, 3 00
Swinburne, J., Wordingham, C. H., and Martin, T. C. Eletcric Currents. (Science Series No. 109.).....16mo, 0 50
Swoope, C. W. Practical Lessons in Electricity.....12mo, *2 00

Tailfer, L. Bleaching Linen and Cotton Yarn and Fabrics.....8vo, *5 00
Tate, J. S. Surcharged and Different Forms of Retaining-walls. (Science Series No. 7.).....16mo, 0 50
Taylor, E. N. Small Water Supplies.....12mo, *2 00
Templeton, W. Practical Mechanic's Workshop Companion. 12mo, morocco, 2 00
Terry, H. L. India Rubber and its Manufacture. (Westminster Series.) 8vo, *2 00
Thayer, H. R. Structural Design. 8vo.
Vol. I. Elements of Structural Design *2 00
Vol. II. Design of Simple Structures.....(*In Preparation.*)
Vol. III. Design of Advanced Structures.....(*In Preparation.*)
Thiess, J. B. and Joy, G. A. Toll Telephone Practice.....8vo, *3 50
Thom, C., and Jones, W. H. Telegraphic Connections.....oblong 12mo, 1 50
Thomas, C. W. Paper-makers' Handbook.....(*In Press.*)
Thompson, A. B. Oil Fields of Russia.....4to, *7 50
—— Petroleum Mining and Oil Field Development.....8vo, *5 00
Thompson, E. P. How to Make Inventions.....8vo, 0 50
Thompson, S. P. Dynamo Electric Machines. (Science Series No. 75.) 16mo, 0 50
Thompson, W. P. Handbook of Patent Law of All Countries.....16mo, 1 50
Thomson, G. S. Milk and Cream Testing.....12mo, *1 75
—— Modern Sanitary Engineering, House Drainage, etc. 8vo, (*In Press.*)
Thornley, T. Cotton Combing Machines.....8vo, *3 00
—— Cotton Spinning. 8vo.
First Year..... *1 50
Second Year..... *2 50
Third Year..... *2 50
Thurso, J. W. Modern Turbine Practice.....8vo, *4 00

Tidy, C. Meymott. Treatment of Sewage. (Science Series No. 94.). 16mo, 0 50
Tinney, W. H. Gold-mining Machinery.....8vo, *3 00
Titherley, A. W. Laboratory Course of Organic Chemistry..... 8vo, *2 00
Toch, M. Chemistry and Technology of Mixed Paints.....8vo, *3 00
—— Materials for Permanent Painting.....12mo, *2 00
Todd, J., and Whall, W. B. Practical Seamanship.....8vo, *7 50
Tonge, J. Coal. (Westminster Series.).....8vo, *2 00
Townsend, F. Alternating Current Engineering.....8vo, boards *0 75
Townsend, J. Ionization of Gases by Collision.....8vo, *1 25
Transactions of the American Institute of Chemical Engineers. 8vo.
Vol. I. 1908..... *6 00
Vol. II. 1909..... *6 00
Vol. III. 1910..... *6 00
Vol. IV. 1911..... *6 00
Traverse Tables. (Science Series No. 115.).....16mo, 0 50
morocco, 1 00
Trinks, W., and Housum, C. Shaft Governors. (Science Series No. 122.) 16mo, 0 50
Trowbridge, W. P. Turbine Wheels. (Science Series No. 44.).....16mo, 0 50
Tucker, J. H. A Manual of Sugar Analysis.....8vo, 3 50
Tumlirz, O. Potential. Trans. by D. Robertson.....12mo, 1 25
Tunner, P. A. Treatise on Roll-turning. Trans. by J. B. Pearse. 8vo, text and folio atlas, 10 00
Turbayne, A. A. Alphabets and Numerals.....4to, 2 00
Turnbull, Jr., J., and Robinson, S. W. A Treatise on the Compound Steam-engine, (Science Series No. 8.).....16mo,
Turrill, S. M. Elementary Course in Perspective.....12mo, *1 25

Underhill, C. R. Solenoids, Electromagnets and Electromagnetic Windings.....12mo, *2 00
Universal Telegraph Cipher Code.....12mo, 1 00
Urquhart, J. W. Electric Light Fitting.....12mo, 2 00
—— Electro-plating.....12mo, 2 00
—— Electrotyping.....12mo, 2 00
—— Electric Ship Lighting.....12mo, 3 00

Vacher, F. Food Inspector's Handbook.....12mo, *2 50
Van Nostrand's Chemical Annual. Second issue 1909.....12mo, *2 50
—— Year Book of Mechanical Engineering Data. First issue 1912...(*In Press.*)
Van Wagenen, T. F. Manual of Hydraulic Mining.....16mo, 1 00
Vega, Baron Von. Logarithmic Tables.....8vo, half morocco, 2 00
Villon, A. M. Practical Treatise on the Leather Industry. Trans. by F. T. Addyman.....8vo, *10 00
Vincent, C. Ammonia and its Compounds. Trans. by M. J. Salter..8vo, *2 00
Volk, C. Haulage and Winding Appliances.....8vo, *4 00
Von Georgievics, G. Chemical Technology of Textile Fibres. Trans. by C. Salter.....8vo, *4 50
—— Chemistry of Dyestuffs. Trans. by C. Salter.....8vo, *4 50
Vose, G. L. Graphic Method for Solving Certain Questions in Arithmetic and Algebra. (Science Series No. 16.).....16mo, 0 50

Wabner, R. Ventilation in Mines. Trans. by C. Salter.....8vo, *4 50
Wade, E. J. Secondary Batteries.....8vo, *4 00
Wadmore, T. M. Elementary Chemical Theory.....12mo, *1 50
Wadsworth, C. Primary Battery Ignition.....12mo (*In Press.*)
Wagner, E. Preserving Fruits, Vegetables, and Meat.....12mo, *2 50
Waldram, P. J. Principles of Structural Mechanics.....(*In Press.*)
Walker, F. Aerial Navigation.....8vo, 2 00
—— Dynamo Building. (Science Series No. 98.).....16mo, 0 50
—— Electric Lighting for Marine Engineers.....8vo, 2 00
Walker, S. F. Steam Boilers, Engines and Turbines.....8vo, 3 00
—— Refrigeration, Heating and Ventilation on Shipboard.....12mo, *2 00
—— Electricity in Mining.....8vo, *3 50
Walker, W. H. Screw Propulsion.....8vo, 0 75
Wallis-Tayler, A. J. Bearings and Lubrication.....8vo, *1 50
—— Aerial or Wire Ropeways.....8vo, *3 00
—— Modern Cycles.....8vo, 4 00
—— Motor Cars.....8vo, 1 80
—— Motor Vehicles for Business Purposes.....8vo, 3 50
—— Pocket Book of Refrigeration and Ice Making.....12mo, 1 50
—— Refrigeration, Cold Storage and Ice-Making.....8vo, *4 50
—— Sugar Machinery.....12mo, *2 00
Wanklyn, J. A. Water Analysis.....12mo, 2 00
Wansbrough, W. D. The A B C of the Differential Calculus.....12mo, *1 50
—— Slide Valves.....12mo, *2 00
Ward, J. H. Steam for the Million.....8vo, 1 00
Waring, Jr., G. E. Sanitary Conditions. (Science Series No. 31.)..16mo, 0 50
—— Sewerage and Land Drainage..... *6 00
Waring, Jr., G. E. Modern Methods of Sewage Disposal.....12mo, 2 00
—— How to Drain a House.....12mo, 1 25
Warren, F. D. Handbook on Reinforced Concrete.....12mo, *2 50
Watkins, A. Photography. (Westminster Series.).....8vo, *2 00
Watson, E. P. Small Engines and Boilers.....12mo, 1 25
Watt, A. Electro-plating and Electro-refining of Metals.....8vo, *4 50
—— Electro-metallurgy.....12mo, 1 00
—— The Art of Soap-making.....8vo, 3 00
—— Leather Manufacture.....8vo, *4 00
—— Paper-Making.....8vo, 3 00
Weale, J. Dictionary of Terms Used in Architecture.....12mo, 2 50
Weale's Scientific and Technical Series. (Complete list sent on application.)
Weather and Weather Instruments.....12mo, 1 00
paper, 0 50
Webb, H. L. Guide to the Testing of Insulated Wires and Cables..12mo, 1 00
Webber, W. H. Y. Town Gas. (Westminster Series.).....8vo, *2 00
Weisbach, J. A Manual of Theoretical Mechanics.....8vo, *6 00
sheep, *7 50
Weisbach, J., and Herrmann, G. Mechanics of Air Machinery.....8vo, *3 75
Welch, W. Correct Lettering.....(*In Press.*)
Weston, E. B. Loss of Head Due to Friction of Water in Pipes...12mo, *1 50
Weymouth, F. M. Drum Armatures and Commutators.....8vo, *3 00
Wheatley, O. Ornamental Cement Work.....(*In Press.*)

Wheeler, J. B. Art of War.....12mo, 1 75
—— Field Fortifications.....12mo, 1 75
Whipple, S. An Elementary and Practical Treatise on Bridge Building. 8vo, 3 00
Whithard, P. Illuminating and Missal Painting.....12mo, 1 50
Wilcox, R. M. Cantilever Bridges. (Science Series No. 25.).....16mo, 0 50
Wilkinson, H. D. Submarine Cable Laying and Repairing.....8vo, *6 00
Williams, A. D., Jr., and Hutchinson, R. W. The Steam Turbine.....(*In Press.*)
Williamson, J., and Blackadder, H. Surveying.....8vo, (*In Press.*)
Williamson, R. S. On the Use of the Barometer.....4to, 15 00
—— Practical Tables in Meteorology and Hypsometery.....4to, 2 50
Willson, F. N. Theoretical and Practical Graphics.....4to, *4 00
Wimperis, H. E. Internal Combustion Engine.....8vo, *3 00
Winchell, N. H., and A. N. Elements of Optical Mineralogy.....8vo, *3 50
Winkler, C., and Lunge, G. Handbook of Technical Gas-Analysis...8vo, 4 00
Winslow, A. Stadia Surveying. (Science Series No. 77.).....16mo, 0 50
Wisser, Lieut. J. P. Explosive Materials. (Science Series No. 70.). 16mo, 0 50
Wisser, Lieut. J. P. Modern Gun Cotton. (Science Series No. 89.)16mo, 0 50
Wood, De V. Luminiferous Aether. (Science Series No. 85.)....16mo, 0 50
Woodbury, D. V. Elements of Stability in the Well-proportioned Arch. 8vo, half morocco, 4 00
Worden, E. C. The Nitrocellulose Industry. Two Volumes.....8vo, *10 00
—— Cellulose Acetate.....8vo, (*In Press.*)
Wright, A. C. Analysis of Oils and Allied Substances.....8vo, *3 50
—— Simple Method for Testing Painters' Materials.....8vo, *2 50
Wright, F. W. Design of a Condensing Plant.....12mo, *1 50
Wright, H. E. Handy Book for Brewers.....8vo, *5 00
Wright, J. Testing, Fault Finding, etc., for Wiremen. (Installation Manuals Series.).....16mo, *0 50
Wright, T. W. Elements of Mechanics.....8vo, *2 50
Wright, T. W., and Hayford, J. F. Adjustment of Observations.....8vo, *3 00

Young, J. E. Electrical Testing for Telegraph Engineers.....8vo, *4 00

Zahner, R. Transmission of Power. (Science Series No. 40.)....16mo,
Zeidler, J., and Lustgarten, J. Electric Arc Lamps.....8vo, *2 00
Zeuner, A. Technical Thermodynamics. Trans. by J. F. Klein. Two Volumes.....8vo, *8 00
Zimmer, G. F. Mechanical Handling of Material.....4to, *10 00
Zipser, J. Textile Raw Materials. Trans. by C. Salter.....8vo, *5 00
Zur Nedden, F. Engineering Workshop Machines and Processes. Trans. by J. A. Davenport.....8vo *2 00

14 DAY USE
RETURN TO DESK FROM WHICH BORROWED
LOAN DEPT.
RENEWALS ONLY—TEL. NO. 642-3405
This book is due on the last date stamped below, or on the date to which renewed.
Renewed books are subject to immediate recall.

[redacted] 27 1970 04
~~Sept 28~~
~~Oct 27~~
~~Nov 27~~
Dec 28
Jan
Feb
~~March 29~~
Aug 27

renewed by
phone
card lost

REC'D LD MAY 15 '73
RECEIVED 3 PM
MAY 15 '73
LOAN DEPT.

LD21A-60m-3,'70
(N5382s10)476-A-32
General Library
University of California
Berkeley

MAY 4 1956 LU
MAR 27 '69 -2 PM
LOAN DEPT.
50m-8,'32

YC 13898

TP893
H8

254540

Hübner